Pound T Strahler

LED-STRAHLER · HERSTELLER LINEA LIGHT



Pound T ist ein LED-Strahler von Linea Light für den Innenbereich (Version track). Erhältlich mit 7,2–34 W in 60 Ausführungen, Lichtfarbe 2700 K / 3000 K / 4000 K, CRI 90/98, IP20. Das Betriebsgerät ist integriert.

IP20 | CRI 90/98 | 7,2–34 W

MERKMALE

- 8 Leistungsstufen: 7.2 W, 8 W, 13 W, 15 W, 23 W, 26 W, 32.5 W, 34 W
- Farben: Schwarz, Weiss
- Lichtfarben: 2700 K / 3000 K / 4000 K
- Optiken: Narrow Spot, Medium Flood, Wide Flood, Spot, Flood, Medium Wide Flood
- Schutzart IP20, CRI 90/98
- Betriebsgerät integriert

TECHNISCHE DATEN

Hersteller	Linea Light	Schutzklasse	II
Leistung	7,2–34 W	Spannung	176-264 V
Lichtfarbe	2700 K / 3000 K / 4000 K	Betriebsgerät	integriert
Farbwiedergabe	CRI 90/98	Steuerung	DALI-2 / Dimming on Board
Schutzart	IP20	Montage	Schiene / Aufbau

AUSFÜHRUNGEN

Art.-Nr.	Leistung	Farbe	Lichtstrom	Optik / Abstrahlwinkel
POUNDT-81954	7.2 W	Weiss	290–334 lm	Narrow Spot 8°
POUNDT-81955	7.2 W	Schwarz	290–334 lm	Narrow Spot 8°
POUNDT-84165	8 W	Weiss	681–701 lm	Medium Flood 37°, Wide Flood 66°
POUNDT-84166	8 W	Schwarz	681–701 lm	Medium Flood 37°, Wide Flood 65°
POUNDT-81625	13 W	Weiss	1094–1306 lm	Spot 18°, Flood 26°, Medium Wide Flood 42°, Medium Wide Flood 45°
POUNDT-81626	13 W	Schwarz	1094–1306 lm	Spot 18°, Flood 25°, Flood 26°, Medium Wide Flood 45°
POUNDT-81630	13 W	Schwarz	1030–1158 lm	Spot 18°, Flood 26°, Medium Wide Flood 45°
POUNDT-81629	13 W	Weiss	1030–1158 lm	Spot 18°, Flood 26°, Medium Wide Flood 45°
POUNDT-81627	13 W	Weiss	1041–1228 lm	Spot 18°, Flood 26°, Medium Wide Flood 45°
POUNDT-81628	13 W	Schwarz	1041–1228 lm	Spot 18°, Flood 26°, Medium Wide Flood 45°
POUNDT-82608	13 W	Schwarz	1040–1306 lm	Spot 17°, Flood 25°, Medium Wide Flood 42°
POUNDT-82607	13 W	Weiss	1040–1306 lm	Spot 17°, Flood 25°, Medium Wide Flood 42°
POUNDT-82611	13 W	Weiss	924–1039 lm	Spot 17°, Flood 25°, Medium Wide Flood 42°
POUNDT-82612	13 W	Schwarz	924–1039 lm	Spot 17°, Flood 25°, Medium Wide Flood 42°
POUNDT-82609	13 W	Weiss	936–1176 lm	Spot 17°, Flood 25°, Medium Wide Flood 42°
POUNDT-82610	13 W	Schwarz	936–1176 lm	Spot 17°, Flood 25°, Medium Wide Flood 42°
POUNDT-82227	13 W	Weiss	965–1146 lm	Spot 18°, Flood 26°, Medium Wide Flood 45°
POUNDT-82228	13 W	Schwarz	965–1146 lm	Spot 18°, Flood 26°, Medium Wide Flood 45°
POUNDT-82409	13 W	Schwarz	908–1021 lm	Spot 18°, Flood 26°, Medium Wide Flood 45°
POUNDT-82408	13 W	Weiss	908–1021 lm	Spot 18°, Flood 26°, Medium Wide Flood 45°
POUNDT-82406	13 W	Weiss	917–1083 lm	Spot 18°, Flood 26°, Medium Wide Flood 45°
POUNDT-82407	13 W	Schwarz	917–1083 lm	Spot 18°, Flood 26°, Medium Wide Flood 45°
POUNDT-84167	15 W	Weiss	1167–1292 lm	Spot 18°, Medium Flood 29°, Wide Flood 57°
POUNDT-84168	15 W	Schwarz	1167–1292 lm	Spot 18°, Medium Flood 29°, Wide Flood 58°
POUNDT-82229	23 W	Weiss	2443–2721 lm	Spot 20°, Medium Flood 35°, Wide Flood 56°
POUNDT-82230	23 W	Schwarz	2443–2721 lm	Spot 20°, Medium Flood 35°, Wide Flood 56°

AUSFÜHRUNGEN

Art.-Nr.	Leistung	Farbe	Lichtstrom	Optik / Abstrahlwinkel
POUNDT-82412	23 W	Weiss	2299–2421 lm	Spot 20°, Medium Flood 35°, Wide Flood 56°
POUNDT-82413	23 W	Schwarz	2299–2421 lm	Spot 20°, Medium Flood 35°, Wide Flood 56°
POUNDT-82411	23 W	Schwarz	2352–2584 lm	Spot 20°, Medium Flood 35°, Wide Flood 56°
POUNDT-82410	23 W	Weiss	2352–2584 lm	Spot 20°, Medium Flood 35°, Wide Flood 56°
POUNDT-81631	26 W	Weiss	2599–2893 lm	Spot 20°, Medium Flood 35°, Wide Flood 56°
POUNDT-81632	26 W	Schwarz	2599–2893 lm	Spot 20°, Medium Flood 35°, Wide Flood 56°
POUNDT-81635	26 W	Weiss	2459–2588 lm	Spot 20°, Medium Flood 35°, Wide Flood 56°
POUNDT-81636	26 W	Schwarz	2459–2588 lm	Spot 20°, Medium Flood 35°, Wide Flood 56°
POUNDT-81633	26 W	Weiss	2501–2748 lm	Spot 20°, Medium Flood 35°, Wide Flood 56°
POUNDT-81634	26 W	Schwarz	2501–2748 lm	Spot 20°, Medium Flood 35°, Wide Flood 56°
POUNDT-81808	26 W	Weiss	2599–2893 lm	Spot 20°, Medium Flood 35°, Wide Flood 56°
POUNDT-81809	26 W	Schwarz	2599–2893 lm	Spot 20°, Medium Flood 35°, Wide Flood 56°
POUNDT-81812	26 W	Weiss	2459–2588 lm	Spot 20°, Medium Flood 35°, Wide Flood 56°
POUNDT-81813	26 W	Schwarz	2459–2588 lm	Spot 20°, Medium Flood 35°, Wide Flood 56°
POUNDT-81811	26 W	Schwarz	2501–2748 lm	Spot 20°, Medium Flood 35°, Wide Flood 56°
POUNDT-81810	26 W	Weiss	2501–2748 lm	Spot 20°, Medium Flood 35°, Wide Flood 56°
POUNDT-82231	32.5 W	Weiss	3675–3926 lm	Spot 17°, Flood 24°, Medium Wide Flood 47°, Wide Flood 47°
POUNDT-82232	32.5 W	Schwarz	3675–3926 lm	Spot 17°, Flood 24°, Wide Flood 47°
POUNDT-82416	32.5 W	Weiss	3471–3513 lm	Spot 17°, Flood 24°, Medium Wide Flood 47°
POUNDT-82417	32.5 W	Schwarz	3471–3513 lm	Spot 17°, Flood 24°, Medium Wide Flood 47°
POUNDT-82414	32.5 W	Weiss	3508–3727 lm	Spot 17°, Flood 24°, Medium Wide Flood 47°, Wide Flood 47°
POUNDT-82415	32.5 W	Schwarz	3508–3727 lm	Spot 17°, Flood 24°, Medium Wide Flood 47°
POUNDT-81637	34 W	Weiss	3841–4103 lm	Spot 17°, Flood 24°, Medium Wide Flood 47°, Wide Flood 47°
POUNDT-81638	34 W	Schwarz	3841–4103 lm	Spot 17°, Flood 24°, Medium Wide Flood 47°, Wide Flood 47°
POUNDT-81642	34 W	Schwarz	3629–3673 lm	Spot 17°, Flood 24°, Wide Flood 47°
POUNDT-81641	34 W	Weiss	3629–3673 lm	Spot 17°, Flood 24°, Wide Flood 47°

AUSFÜHRUNGEN

Art.-Nr.	Leistung	Farbe	Lichtstrom	Optik / Abstrahlwinkel
POUNDT-81639	34 W	Weiss	3666–3898 lm	Spot 17°, Flood 24°, Wide Flood 47°
POUNDT-81640	34 W	Schwarz	3666–3898 lm	Spot 17°, Flood 24°, Wide Flood 47°
POUNDT-81752	34 W	Weiss	3841–4103 lm	Spot 17°, Flood 24°, Medium Wide Flood 47°, Wide Flood 47°
POUNDT-81753	34 W	Schwarz	3841–4103 lm	Spot 17°, Flood 24°, Medium Wide Flood 47°, Wide Flood 47°
POUNDT-81756	34 W	Weiss	3629–3673 lm	Spot 17°, Flood 24°, Wide Flood 47°
POUNDT-81757	34 W	Schwarz	3629–3673 lm	Spot 17°, Flood 24°, Wide Flood 47°
POUNDT-81754	34 W	Weiss	3666–3898 lm	Spot 17°, Flood 24°, Wide Flood 47°
POUNDT-81755	34 W	Schwarz	3666–3898 lm	Spot 17°, Flood 24°, Wide Flood 47°

MASSBILDER (mm)

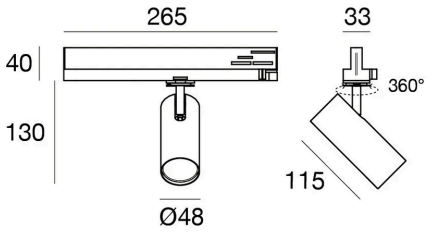

7.2 W

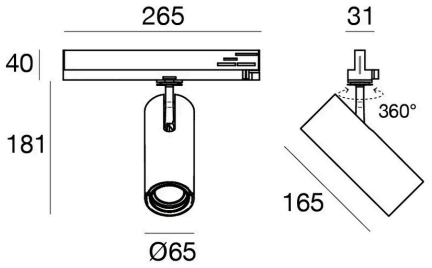

8 W / 15 W

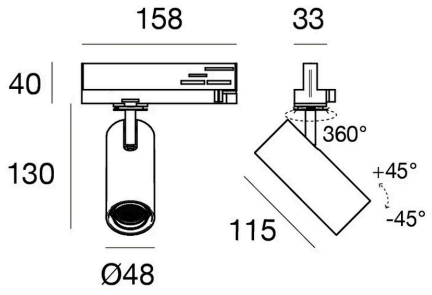

13 W

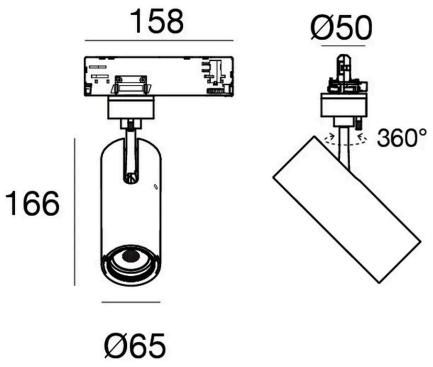

23 W

MASSBILDER (mm)

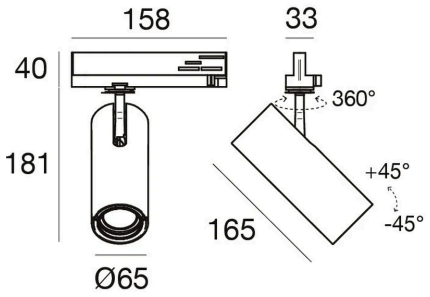

26 W

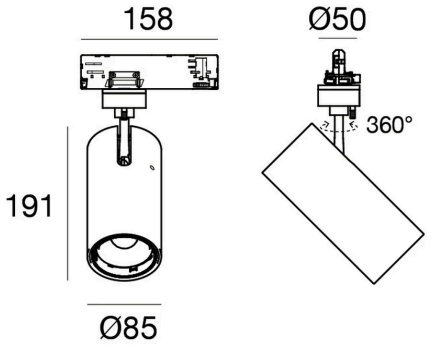

32.5 W

Lichttechnische Werte sind Bemessungswerte, Toleranz ± 10 %. Farbe, Lichtfarbe und Optik bei der Bestellung angeben. Anschluss durch eine Elektrofachperson. Technische Änderungen vorbehalten.