Guardian Einbauleuchte

LED-EINBAULEUCHTE · HERSTELLER LINEA LIGHT



Guardian ist eine LED-Einbauleuchte von Linea Light für den Aussenbereich. Erhältlich mit 8–19 W in 49 Ausführungen, Lichtfarbe 2700 K / 3000 K / 4000 K, CRI 80/90, IP67. Das Betriebsgerät ist integriert.

IP67 | CRI 80/90 | 8–19 W

MERKMALE

- 4 Leistungsstufen: 8 W, 13 W, 16 W, 19 W
- Farben: Grau, Text black grey RAL 7021, Weiss, Weiß RAL 9003 geprägt
- Lichtfarben: 2700 K / 3000 K / 4000 K
- Optiken: Flood, Spot, Wide Flood, Medium Wide Flood, Medium Flood
- Schutzart IP67, CRI 80/90
- Betriebsgerät integriert

TECHNISCHE DATEN

Hersteller	Linea Light	Schutzklasse	I
Leistung	8–19 W	Spannung	198-264 V
Lichtfarbe	2700 K / 3000 K / 4000 K	Betriebsgerät	integriert
Farbwiedergabe	CRI 80/90	Steuerung	DALI-2
Schutzart	IP67	Montage	Deckeneinbau

AUSFÜHRUNGEN

Art.-Nr.	Leistung	Farbe	Lichtstrom	Optik / Abstrahlwinkel
GUARDIAN-C01903-GRA	8 W	Grau	636–954 lm	Spot 15°, Flood 26°, Wide Flood 50°, Asymmetric Wallwasher 79°
GUARDIAN-C01903-TEX	8 W	Text black grey RAL 7021	636–954 lm	Spot 15°, Flood 26°, Wide Flood 50°, Asymmetric Wallwasher 79°
GUARDIAN-C01903-WH	8 W	Weiss	636–954 lm	Spot 15°, Flood 26°, Wide Flood 50°, Asymmetric Wallwasher 79°
GUARDIAN-C01904-GRA	8 W	Grau	597–743 lm	Spot 14°, Flood 24°, Medium Wide Flood 43°
GUARDIAN-C01904-TEX	8 W	Text black grey RAL 7021	597–743 lm	Spot 14°, Flood 24°, Medium Wide Flood 43°
GUARDIAN-C01904-WH	8 W	Weiss	597–743 lm	Spot 14°, Flood 24°, Medium Wide Flood 43°
GUARDIAN-C01785-GRA	13 W	Grau	1352–1648 lm	Spot 17°, Flood 25°, Wide Flood 52°
GUARDIAN-C01785-TEX	13 W	Text black grey RAL 7021	1352–1648 lm	Spot 17°, Flood 25°, Wide Flood 52°
GUARDIAN-C01785-WH	13 W	Weiss	1352–1648 lm	Spot 17°, Flood 25°, Wide Flood 52°
GUARDIAN-C01786-GRA	13 W	Grau	835–1263 lm	Spot 16°, Flood 24°, Medium Wide Flood 42°
GUARDIAN-C01786-TEX	13 W	Text black grey RAL 7021	835–1263 lm	Spot 16°, Flood 24°, Medium Wide Flood 42°
GUARDIAN-C01786-WH	13 W	Weiss	835–1263 lm	Spot 16°, Flood 24°, Medium Wide Flood 42°
GUARDIAN-C01777-GRA	13 W	Grau	1352–1648 lm	Spot 17°, Flood 25°, Wide Flood 52°
GUARDIAN-C01777-TEX	13 W	Text black grey RAL 7021	1352–1648 lm	Spot 17°, Flood 25°, Wide Flood 52°
GUARDIAN-C01777-WH	13 W	Weiss	1352–1648 lm	Spot 17°, Flood 25°, Wide Flood 52°
GUARDIAN-C01778-GRA	13 W	Grau	835–1263 lm	Spot 16°, Flood 24°, Medium Wide Flood 42°
GUARDIAN-C01778-TEX	13 W	Text black grey RAL 7021	835–1263 lm	Spot 16°, Flood 24°, Medium Wide Flood 42°
GUARDIAN-C01778-WH	13 W	Weiss	835–1263 lm	Spot 16°, Flood 24°, Medium Wide Flood 42°
GUARDIAN-C01779-GRA	13 W	Grau	1352–1648 lm	Spot 17°, Flood 25°, Wide Flood 52°
GUARDIAN-C01779-TEX	13 W	Text black grey RAL 7021	1352–1648 lm	Spot 17°, Flood 25°, Wide Flood 52°
GUARDIAN-C01779-WH	13 W	Weiss	1352–1648 lm	Spot 17°, Flood 25°, Wide Flood 52°
GUARDIAN-C01780-GRA	13 W	Grau	835–1263 lm	Spot 16°, Flood 24°, Medium Wide Flood 42°
GUARDIAN-C01780-TEX	13 W	Text black grey RAL 7021	835–1263 lm	Spot 16°, Flood 24°, Medium Wide Flood 42°
GUARDIAN-C01780-WH	13 W	Weiss	835–1263 lm	Spot 16°, Flood 24°, Medium Wide Flood 42°
GUARDIAN-C01906-GRA	16 W	Grau	1633–1885 lm	Spot 16°, Medium Flood 37°, Wide Flood 52°
GUARDIAN-C01906-TEX	16 W	Text black grey RAL 7021	1633–1885 lm	Spot 16°, Medium Flood 37°, Wide Flood 52°

AUSFÜHRUNGEN

Art.-Nr.	Leistung	Farbe	Lichtstrom	Optik / Abstrahlwinkel
GUARDIAN-C01906-WH	16 W	Weiss	1633–1885 lm	Spot 16°, Medium Flood 37°, Wide Flood 52°
GUARDIAN-C01908-GRA	16 W	Grau	1105–1530 lm	Spot 15°, Medium Flood 34°, Medium Wide Flood 46°
GUARDIAN-C01908-TEX	16 W	Text black grey RAL 7021	1105–1530 lm	Spot 15°, Medium Flood 34°, Medium Wide Flood 46°
GUARDIAN-C01908-WH	16 W	Weiss	1105–1530 lm	Spot 15°, Medium Flood 34°, Medium Wide Flood 46°
GUARDIAN-C01907-GRA	16 W	Grau	1633–1885 lm	Spot 16°, Medium Flood 37°, Wide Flood 52°
GUARDIAN-C01907-TEX	16 W	Text black grey RAL 7021	1633–1885 lm	Spot 16°, Medium Flood 37°, Wide Flood 52°
GUARDIAN-C01907-WH	16 W	Weiss	1633–1885 lm	Spot 16°, Medium Flood 37°, Wide Flood 52°
GUARDIAN-C01907-WEI	16 W	Weiß RAL 9003 geprägt	1633–1885 lm	Spot 16°, Medium Flood 37°, Wide Flood 52°
GUARDIAN-C01909-GRA	16 W	Grau	1105–1530 lm	Spot 15°, Medium Flood 34°, Medium Wide Flood 46°
GUARDIAN-C01909-TEX	16 W	Text black grey RAL 7021	1105–1530 lm	Spot 15°, Medium Flood 34°, Medium Wide Flood 46°
GUARDIAN-C01909-WH	16 W	Weiss	1105–1530 lm	Spot 15°, Medium Flood 34°, Medium Wide Flood 46°
GUARDIAN-C01920-GRA	19 W	Grau	1945–2245 lm	Spot 16°, Medium Flood 37°, Wide Flood 52°
GUARDIAN-C01920-TEX	19 W	Text black grey RAL 7021	1945–2245 lm	Spot 16°, Medium Flood 37°, Wide Flood 52°
GUARDIAN-C01920-WH	19 W	Weiss	1945–2245 lm	Spot 16°, Medium Flood 37°, Wide Flood 52°
GUARDIAN-C01922-GRA	19 W	Grau	1316–1822 lm	Spot 15°, Medium Flood 34°, Medium Wide Flood 46°
GUARDIAN-C01922-TEX	19 W	Text black grey RAL 7021	1316–1822 lm	Spot 15°, Medium Flood 34°, Medium Wide Flood 46°
GUARDIAN-C01922-WH	19 W	Weiss	1316–1822 lm	Spot 15°, Medium Flood 34°, Medium Wide Flood 46°
GUARDIAN-C01921-GRA	19 W	Grau	1945–2245 lm	Spot 16°, Medium Flood 37°, Wide Flood 52°
GUARDIAN-C01921-TEX	19 W	Text black grey RAL 7021	1945–2245 lm	Spot 16°, Medium Flood 37°, Wide Flood 52°
GUARDIAN-C01921-WH	19 W	Weiss	1945–2245 lm	Spot 16°, Medium Flood 37°, Wide Flood 52°
GUARDIAN-C01923-GRA	19 W	Grau	1316–1822 lm	Spot 15°, Medium Flood 34°, Medium Wide Flood 46°
GUARDIAN-C01923-TEX	19 W	Text black grey RAL 7021	1316–1822 lm	Spot 15°, Medium Flood 34°, Medium Wide Flood 46°
GUARDIAN-C01923-WH	19 W	Weiss	1316–1822 lm	Spot 15°, Medium Flood 34°, Medium Wide Flood 46°

MASSBILDER (mm)

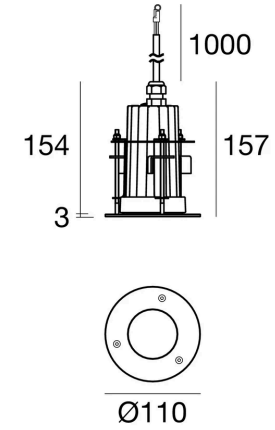

8 W

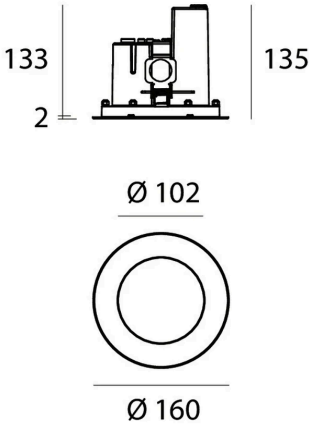

13 W

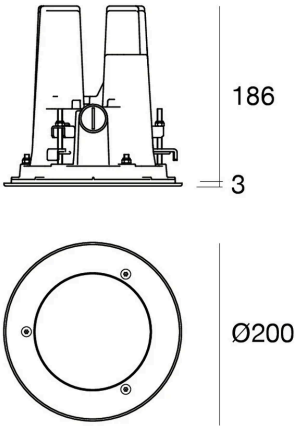

16 W / 19 W

Lichttechnische Werte sind Bemessungswerte, Toleranz ± 10 %. Farbe, Lichtfarbe und Optik bei der Bestellung angeben. Anschluss durch eine Elektrofachperson. Technische Änderungen vorbehalten.