Periskop RBS Pollerleuchte

LED-POLLERLEUCHTE · HERSTELLER LINEA LIGHT



Periskop RBS ist eine LED-Pollerleuchte von Linea Light für den Aussenbereich (Base + Extension). Erhältlich mit 1,5–19 W in 36 Ausführungen, Lichtfarbe 2700 K / 3000 K / 4000 K, CRI 80/90, IP65. Das Betriebsgerät ist integriert.

IP65 | CRI 80/90 | 1,5–19 W

MERKMALE

- 8 Leistungsstufen: 1.5 W, 2 W, 6 W, 6.3 W, 8 W, 9 W, 18 W, 19 W
- Farben: Dark brown, Grau, Schwarz, Text mattefield green R6031, Weiss
- Lichtfarben: 2700 K / 3000 K / 4000 K
- Optiken: Medium Flood, Medium Wide Flood, Spot, Narrow Spot, Wide Flood, Flood
- Schutzart IP65, CRI 80/90
- Betriebsgerät integriert

TECHNISCHE DATEN

Hersteller	Linea Light	Schutzklasse	I
Leistung	1,5–19 W	Spannung	176-264 V AC /230-280 V DC
Lichtfarbe	2700 K / 3000 K / 4000 K	Betriebsgerät	integriert
Farbwiedergabe	CRI 80/90	Steuerung	DALI-2
Schutzart	IP65	Montage	Bodenmontage

AUSFÜHRUNGEN

Art.-Nr.	Leistung	Farbe	Lichtstrom	Optik / Abstrahlwinkel
PERISKOP-C01656	1.5 W	Dark brown / Grau / Schwarz / Text mattefield green R6031 / Weiss	83–129 lm	Hyper Spot 3°
PERISKOP-C01668	1.5 W	Dark brown / Grau / Schwarz / Text mattefield green R6031 / Weiss	83–129 lm	Hyper Spot 3°
PERISKOP-C01156	2 W	Dark brown / Grau / Schwarz / Text mattefield green R6031 / Weiss	109–169 lm	Hyper Spot 3°
PERISKOP-C01430	2 W	Dark brown / Grau / Schwarz / Text mattefield green R6031 / Weiss	109–169 lm	Hyper Spot 3°
PERISKOP-C01657	6 W	Dark brown / Grau / Schwarz / Text mattefield green R6031 / Weiss	289–445 lm	Ultra Spot 5°
PERISKOP-C01669	6 W	Dark brown / Grau / Schwarz / Text mattefield green R6031 / Weiss	289–445 lm	Ultra Spot 5°
PERISKOP-C01191	6.3 W	Dark brown / Grau / Schwarz / Text mattefield green R6031 / Weiss	257–396 lm	Hyper Spot 4°
PERISKOP-C01456	6.3 W	Dark brown / Grau / Schwarz / Text mattefield green R6031 / Weiss	257–396 lm	Hyper Spot 4°
PERISKOP-C01192	6.3 W	Dark brown / Grau / Schwarz / Text mattefield green R6031 / Weiss	257–396 lm	Hyper Spot 4°
PERISKOP-C01457	6.3 W	Dark brown / Grau / Schwarz / Text mattefield green R6031 / Weiss	257–396 lm	Hyper Spot 4°
PERISKOP-C01158	8 W	Dark brown / Grau / Schwarz / Text mattefield green R6031 / Weiss	377–580 lm	Ultra Spot 5°
PERISKOP-C01432	8 W	Dark brown / Grau / Schwarz / Text mattefield green R6031 / Weiss	377–580 lm	Ultra Spot 5°
PERISKOP-C01163	8 W	Dark brown / Grau / Schwarz / Text mattefield green R6031 / Weiss	446–532 lm	Narrow Spot 11°, Spot 18°, Medium Flood 34°
PERISKOP-C01437	8 W	Dark brown / Grau / Schwarz / Text mattefield green R6031 / Weiss	446–532 lm	Narrow Spot 11°, Spot 18°, Medium Flood 34°
PERISKOP-C01160	9 W	Dark brown / Grau / Schwarz / Text mattefield green R6031 / Weiss	570–1061 lm	Spot 14°, Vertical Elliptic M. Flood (30°÷39°) X <20° 15°, Vertical Elliptic M. W. Flood (40°÷49°) X (20°÷40°) 30°, Medium Flood 33°, Horizontal Elliptic Spot (10°÷19°) X (20°÷40°) 37°, Horizontal Elliptic M. Flood (40°÷49°) X (20°÷40°) 41°, Medium Wide Flood 48°
PERISKOP-C01162	9 W	Dark brown / Grau / Schwarz / Text mattefield green R6031 / Weiss	516–797 lm	Spot 14°, Medium Flood 33°, Medium Wide Flood 48°
PERISKOP-C01434	9 W	Dark brown / Grau / Schwarz / Text mattefield green R6031 / Weiss	570–1061 lm	Spot 14°, Vertical Elliptic M. Flood (30°÷39°) X <20° 15°, Vertical Elliptic M. W. Flood (40°÷49°) X (20°÷40°) 30°, Medium Flood 33°, Horizontal Elliptic Spot (10°÷19°) X (20°÷40°) 37°, Horizontal Elliptic M. Flood (40°÷49°) X (20°÷40°) 41°, Medium Wide Flood 48°
PERISKOP-C01436	9 W	Dark brown / Grau / Schwarz / Text mattefield green R6031 / Weiss	516–797 lm	Spot 14°, Medium Flood 33°, Medium Wide Flood 48°
PERISKOP-C01658	9 W	Dark brown / Grau / Schwarz / Text mattefield green R6031 / Weiss	570–1061 lm	Spot 14°, Vertical Elliptic M. Flood (30°÷39°) X <20° 15°, Vertical Elliptic M. W. Flood (40°÷49°) X (20°÷40°) 30°, Medium Flood 33°, Horizontal Elliptic Spot (10°÷19°) X (20°÷40°) 37°, Horizontal Elliptic M. Flood (40°÷49°) X (20°÷40°) 41°, Medium Wide Flood 48°
PERISKOP-C01659	9 W	Dark brown / Grau / Schwarz / Text mattefield green R6031 / Weiss	516–797 lm	Spot 14°, Medium Flood 33°, Medium Wide Flood 48°
PERISKOP-C01670	9 W	Dark brown / Grau / Schwarz / Text mattefield green R6031 / Weiss	570–1061 lm	Spot 14°, Vertical Elliptic M. Flood (30°÷39°) X <20° 15°, Vertical Elliptic M. W. Flood (40°÷49°) X (20°÷40°) 30°, Medium Flood 33°, Horizontal Elliptic Spot (10°÷19°) X (20°÷40°) 37°, Horizontal Elliptic M. Flood (40°÷49°) X (20°÷40°) 41°, Medium Wide Flood 48°
PERISKOP-C01671	9 W	Dark brown / Grau / Schwarz / Text mattefield green R6031 / Weiss	516–797 lm	Spot 14°, Medium Flood 33°, Medium Wide Flood 48°
PERISKOP-C01195	18 W	Dark brown / Grau / Schwarz / Text mattefield green R6031 / Weiss	1230–2215 lm	Spot 14°, Vertical Elliptic M. Flood (30°÷39°) X <20° 15°, Vertical Elliptic M. W. Flood (40°÷49°) X (20°÷40°) 32°, Medium Flood 35°, Horizontal Elliptic Spot (10°÷19°) X (20°÷40°) 39°, Horizontal Elliptic M. Flood (30°÷39°) X (41°÷60°) 44°, Wide Flood 52°

PERISKOP-C01197	18 W	Dark brown / Grau / Schwarz / Text mattefield green R6031 / Weiss	1015–1705 lm	Spot 13°, Medium Flood 31°, Medium Wide Flood 42°
PERISKOP-C01460	18 W	Dark brown / Grau / Schwarz / Text mattefield green R6031 / Weiss	1230–2215 lm	Spot 14°, Vertical Elliptic M. Flood (30°÷39°) X <20° 15°, Vertical Elliptic M. W. Flood (40°÷49°) X (20°÷40°) 32°, Medium Flood 35°, Horizontal Elliptic Spot (10°÷19°) X (20°÷40°) 39°, Horizontal Elliptic M. Flood (30°÷39°) X (41°÷60°) 44°, Wide Flood 52°
PERISKOP-C01462	18 W	Dark brown / Grau / Schwarz / Text mattefield green R6031 / Weiss	1015–1705 lm	Spot 13°, Medium Flood 31°, Medium Wide Flood 42°

AUSFÜHRUNGEN

Art.-Nr.	Leistung	Farbe	Lichtstrom	Optik / Abstrahlwinkel
PERISKOP-C01196	18 W	Dark brown / Grau / Schwarz / Text mattefield green R6031 / Weiss	1230–2215 lm	Spot 14°, Vertical Elliptic M. Flood (30°÷39°) X <20° 15°, Vertical Elliptic M. W. Flood (40°÷49°) X (20°÷40°) 32°, Medium Flood 35°, Horizontal Elliptic Spot (10°÷19°) X (20°÷40°) 39°, Horizontal Elliptic M. Flood (30°÷39°) X (41°÷60°) 44°, Wide Flood 52°
PERISKOP-C01198	18 W	Dark brown / Grau / Schwarz / Text mattefield green R6031 / Weiss	1015–1705 lm	Spot 13°, Medium Flood 31°, Medium Wide Flood 42°
PERISKOP-C01199	18 W	Dark brown / Grau / Schwarz / Text mattefield green R6031 / Weiss		
PERISKOP-C01461	18 W	Dark brown / Grau / Schwarz / Text mattefield green R6031 / Weiss	1230–2215 lm	Spot 14°, Vertical Elliptic M. Flood (30°÷39°) X <20° 15°, Vertical Elliptic M. W. Flood (40°÷49°) X (20°÷40°) 32°, Medium Flood 35°, Horizontal Elliptic Spot (10°÷19°) X (20°÷40°) 39°, Horizontal Elliptic M. Flood (30°÷39°) X (41°÷60°) 44°, Wide Flood 52°
PERISKOP-C01463	18 W	Dark brown / Grau / Schwarz / Text mattefield green R6031 / Weiss	1015–1705 lm	Spot 13°, Medium Flood 31°, Medium Wide Flood 42°
PERISKOP-C01464	18 W	Dark brown / Grau / Schwarz / Text mattefield green R6031 / Weiss		
PERISKOP-C01193	19 W	Dark brown / Grau / Schwarz / Text mattefield green R6031 / Weiss	595–915 lm	Ultra Spot 5°
PERISKOP-C01458	19 W	Dark brown / Grau / Schwarz / Text mattefield green R6031 / Weiss	595–915 lm	Ultra Spot 5°
PERISKOP-C01194	19 W	Dark brown / Grau / Schwarz / Text mattefield green R6031 / Weiss	595–915 lm	Ultra Spot 5°
PERISKOP-C01459	19 W	Dark brown / Grau / Schwarz / Text mattefield green R6031 / Weiss	595–915 lm	Ultra Spot 5°

MASSBILDER (mm)

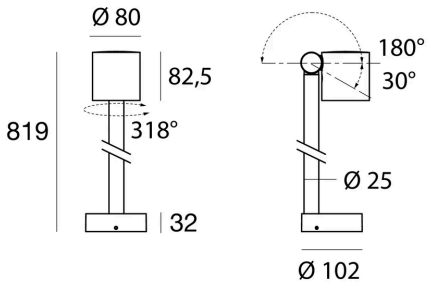

1.5 W / 2 W / 6 W / 8 W / 9 W

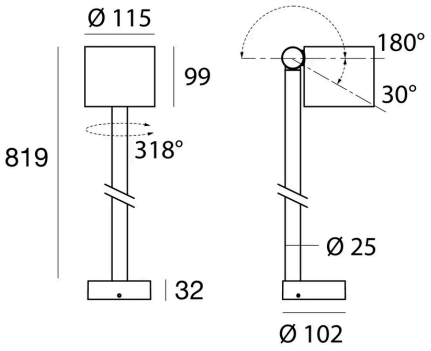

6.3 W / 18 W / 19 W

Lichttechnische Werte sind Bemessungswerte, Toleranz ± 10 %. Farbe, Lichtfarbe und Optik bei der Bestellung angeben. Anschluss durch eine Elektrofachperson. Technische Änderungen vorbehalten.