Quantum R EVO Einbauleuchte

LED-EINBAULEUCHTE · HERSTELLER LINEA LIGHT



Quantum R EVO ist eine LED-Einbauleuchte von Linea Light für den Innenbereich (Runde Version). Erhältlich mit 4–14 W in 75 Ausführungen, Lichtfarbe 2700 K / 3000 K / 3500 K / 4000 K, CRI 80/90, IP20 / IP40. Das Konstantstrom-Betriebsgerät ist nicht im Lieferumfang und wird separat bestellt.

IP20 / IP40 | CRI 80/90 | 4–14 W

MERKMALE

- 5 Leistungsstufen: 4 W, 6 W, 9 W, 11 W, 14 W
- Farben: Anodic bronze, Gold, Painted copper, Sand, Schwarz, Text Beige Red Ral 3012, Text Brilliant Grey Ral 9006, Text Dusty Blue RAL 5024, Text Green Blue Ral 6004, Text Moonshadow Grey RAL 7048, Text Mushroom RAL 1019, Text Steel Blue Ral 5011, Text grey RAL 7012, Text rubin RAL 3003, Weiss
- Lichtfarben: 2700 K / 3000 K / 3500 K / 4000 K
- Optiken: Flood, Spot, Wide Flood, Medium Flood, Medium Wide Flood
- Schutzart IP20 / IP40, CRI 80/90
- Betriebsgerät nicht inbegriffen (Konstantstrom)

TECHNISCHE DATEN

Hersteller	Linea Light	Schutzklasse	III
Leistung	4–14 W	Spannung	Konstantstrom
Lichtfarbe	2700 K / 3000 K / 3500 K / 4000 K	Betriebsgerät	nicht inbegriffen
Farbwiedergabe	CRI 80/90	Steuerung	je nach Betriebsgerät
Schutzart	IP20 / IP40	Montage	Deckeneinbau

AUSFÜHRUNGEN

Art.-Nr.	Leistung	Farbe	Lichtstrom	Optik / Abstrahlwinkel
QUANTUMR-77324	4 W	Weiss	238–274 lm	Spot 10°
QUANTUMR-77348	4 W	Weiss	193–223 lm	Spot 9°
QUANTUMR-77325	4 W	Schwarz	223–257 lm	Spot 10°
QUANTUMR-77349	4 W	Schwarz	181–209 lm	Spot 9°
QUANTUMR-77542	4 W	Gold	232–268 lm	Spot 10°
QUANTUMR-77645	4 W	Anodic bronze	226–261 lm	Spot 10°
QUANTUMR-77566	4 W	Gold	185–214 lm	Spot 9°
QUANTUMR-77646	4 W	Anodic bronze	183–212 lm	Spot 9°
QUANTUMR-C01392-ANO	6 W	Anodic bronze	266–649 lm	Spot 19°, Flood 26°, Flood 27°, Wide Flood 54°
QUANTUMR-C01392-GOL	6 W	Gold	266–649 lm	Spot 19°, Flood 26°, Flood 27°, Wide Flood 54°
QUANTUMR-C01392-PAI	6 W	Painted copper	266–649 lm	Spot 19°, Flood 26°, Flood 27°, Wide Flood 54°
QUANTUMR-C01392-SAN	6 W	Sand	266–649 lm	Spot 19°, Flood 26°, Flood 27°, Wide Flood 54°
QUANTUMR-C01392-BB	6 W	Schwarz	266–649 lm	Spot 19°, Flood 26°, Flood 27°, Wide Flood 54°
QUANTUMR-C01392-TEX	6 W	Text Beige Red Ral 3012	266–649 lm	Spot 19°, Flood 26°, Flood 27°, Wide Flood 54°
QUANTUMR-C01392-TEXX	6 W	Text Brilliant Grey Ral 9006	266–649 lm	Spot 19°, Flood 26°, Flood 27°, Wide Flood 54°
QUANTUMR-C01392-TEXXX	6 W	Text Dusty Blue RAL 5024	266–649 lm	Spot 19°, Flood 26°, Flood 27°, Wide Flood 54°
QUANTUMR-C01392-TEXXXX	6 W	Text Green Blue Ral 6004	266–649 lm	Spot 19°, Flood 26°, Flood 27°, Wide Flood 54°
QUANTUMR-C01392-TEXXXXX	6 W	Text Moonshadow Grey RAL 7048	266–649 lm	Spot 19°, Flood 26°, Flood 27°, Wide Flood 54°
QUANTUMR-C01392-TEXXXXXX	6 W	Text Mushroom RAL 1019	266–649 lm	Spot 19°, Flood 26°, Flood 27°, Wide Flood 54°
QUANTUMR-C01392-TEXXXXXXX	6 W	Text Steel Blue Ral 5011	266–649 lm	Spot 19°, Flood 26°, Flood 27°, Wide Flood 54°
QUANTUMR-C01392-TEXXXXXXXX	6 W	Text grey RAL 7012	266–649 lm	Spot 19°, Flood 26°, Flood 27°, Wide Flood 54°
QUANTUMR-C01392-TEXXXXXXXXX	6 W	Text rubin RAL 3003	266–649 lm	Spot 19°, Flood 26°, Flood 27°, Wide Flood 54°
QUANTUMR-C01392-WH	6 W	Weiss	266–649 lm	Spot 19°, Flood 26°, Flood 27°, Wide Flood 54°
QUANTUMR-C01522-ANO	6 W	Anodic bronze	460–599 lm	Spot 19°, Flood 26°, Wide Flood 53°
QUANTUMR-C01522-GOL	6 W	Gold	460–599 lm	Spot 19°, Flood 26°, Wide Flood 53°
QUANTUMR-C01522-PAI	6 W	Painted copper	460–599 lm	Spot 19°, Flood 26°, Wide Flood 53°

AUSFÜHRUNGEN

Art.-Nr.	Leistung	Farbe	Lichtstrom	Optik / Abstrahlwinkel
QUANTUMR-C01522-SAN	6 W	Sand	460–599 lm	Spot 19°, Flood 26°, Wide Flood 53°
QUANTUMR-C01522-BB	6 W	Schwarz	460–599 lm	Spot 19°, Flood 26°, Wide Flood 53°
QUANTUMR-C01522-TEX	6 W	Text Beige Red Ral 3012	460–599 lm	Spot 19°, Flood 26°, Wide Flood 53°
QUANTUMR-C01522-TEXX	6 W	Text Brilliant Grey Ral 9006	460–599 lm	Spot 19°, Flood 26°, Wide Flood 53°
QUANTUMR-C01522-TEXXX	6 W	Text Dusty Blue RAL 5024	460–599 lm	Spot 19°, Flood 26°, Wide Flood 53°
QUANTUMR-C01522-TEXXXX	6 W	Text Green Blue Ral 6004	460–599 lm	Spot 19°, Flood 26°, Wide Flood 53°
QUANTUMR-C01522-TEXXXXX	6 W	Text Moonshadow Grey RAL 7048	460–599 lm	Spot 19°, Flood 26°, Wide Flood 53°
QUANTUMR-C01522-TEXXXXXX	6 W	Text Mushroom RAL 1019	460–599 lm	Spot 19°, Flood 26°, Wide Flood 53°
QUANTUMR-C01522-TEXXXXXXX	6 W	Text Steel Blue Ral 5011	460–599 lm	Spot 19°, Flood 26°, Wide Flood 53°
QUANTUMR-C01522-TEXXXXXXXX	6 W	Text grey RAL 7012	460–599 lm	Spot 19°, Flood 26°, Wide Flood 53°
QUANTUMR-C01522-TEXXXXXXXXX	6 W	Text rubin RAL 3003	460–599 lm	Spot 19°, Flood 26°, Wide Flood 53°
QUANTUMR-C01522-WH	6 W	Weiss	460–599 lm	Spot 19°, Flood 26°, Wide Flood 53°
QUANTUMR-77322	9 W	Weiss	640–849 lm	Spot 15°, Medium Flood 31°, Medium Wide Flood 46°
QUANTUMR-77346	9 W	Weiss	400–625 lm	Spot 14°, Flood 27°, Medium Flood 34°
QUANTUMR-77323	9 W	Schwarz	587–779 lm	Spot 15°, Medium Flood 31°, Medium Wide Flood 46°
QUANTUMR-77328	9 W	Weiss	665–839 lm	Spot 10°
QUANTUMR-77347	9 W	Schwarz	367–572 lm	Spot 14°, Flood 27°, Medium Flood 34°
QUANTUMR-77352	9 W	Weiss	551–696 lm	Spot 10°
QUANTUMR-77544	9 W	Gold	614–815 lm	Spot 15°, Medium Flood 31°, Medium Wide Flood 46°
QUANTUMR-77647	9 W	Anodic bronze	608–807 lm	Spot 15°, Medium Flood 31°, Medium Wide Flood 46°
QUANTUMR-77329	9 W	Schwarz	645–814 lm	Spot 10°
QUANTUMR-77568	9 W	Gold	384–600 lm	Spot 14°, Flood 27°, Medium Flood 34°
QUANTUMR-77648	9 W	Anodic bronze	380–594 lm	Spot 14°, Flood 27°, Medium Flood 34°
QUANTUMR-77353	9 W	Schwarz	534–675 lm	Spot 10°
QUANTUMR-77546	9 W	Gold	638–806 lm	Spot 10°
QUANTUMR-77649	9 W	Anodic bronze	631–797 lm	Spot 10°

AUSFÜHRUNGEN

Art.-Nr.	Leistung	Farbe	Lichtstrom	Optik / Abstrahlwinkel
QUANTUMR-77570	9 W	Gold	529–668 lm	Spot 10°
QUANTUMR-77650	9 W	Anodic bronze	523–661 lm	Spot 10°
QUANTUMR-C01527-ANO	11 W	Anodic bronze	700–982 lm	Flood 22°, Medium Wide Flood 42°, Wide Flood 51°
QUANTUMR-C01527-GOL	11 W	Gold	700–982 lm	Flood 22°, Medium Wide Flood 42°, Wide Flood 51°
QUANTUMR-C01527-SAN	11 W	Sand	700–982 lm	Flood 22°, Medium Wide Flood 42°, Wide Flood 51°
QUANTUMR-C01527-BB	11 W	Schwarz	700–982 lm	Flood 22°, Medium Wide Flood 42°, Wide Flood 51°
QUANTUMR-C01527-TEX	11 W	Text Beige Red Ral 3012	700–982 lm	Flood 22°, Medium Wide Flood 42°, Wide Flood 51°
QUANTUMR-C01527-TEXX	11 W	Text Brilliant Grey Ral 9006	700–982 lm	Flood 22°, Medium Wide Flood 42°, Wide Flood 51°
QUANTUMR-C01527-TEXXX	11 W	Text Dusty Blue RAL 5024	700–982 lm	Flood 22°, Medium Wide Flood 42°, Wide Flood 51°
QUANTUMR-C01527-TEXXXX	11 W	Text Green Blue Ral 6004	700–982 lm	Flood 22°, Medium Wide Flood 42°, Wide Flood 51°
QUANTUMR-C01527-TEXXXXX	11 W	Text Moonshadow Grey RAL 7048	700–982 lm	Flood 22°, Medium Wide Flood 42°, Wide Flood 51°
QUANTUMR-C01527-TEXXXXXX	11 W	Text Mushroom RAL 1019	700–982 lm	Flood 22°, Medium Wide Flood 42°, Wide Flood 51°
QUANTUMR-C01527-TEXXXXXXX	11 W	Text grey RAL 7012	700–982 lm	Flood 22°, Medium Wide Flood 42°, Wide Flood 51°
QUANTUMR-C01527-TEXXXXXXXX	11 W	Text rubin RAL 3003	700–982 lm	Flood 22°, Medium Wide Flood 42°, Wide Flood 51°
QUANTUMR-C01527-WH	11 W	Weiss	700–982 lm	Flood 22°, Medium Wide Flood 42°, Wide Flood 51°
QUANTUMR-77326	14 W	Weiss	1549–2031 lm	Flood 21°, Medium Flood 32°, Wide Flood 54°
QUANTUMR-77350	14 W	Weiss	1018–1544 lm	Flood 19°, Flood 28°, Medium Wide Flood 46°
QUANTUMR-77327	14 W	Schwarz	1439–1888 lm	Flood 21°, Medium Flood 32°, Wide Flood 54°
QUANTUMR-77351	14 W	Schwarz	947–1435 lm	Flood 19°, Flood 28°, Medium Wide Flood 46°
QUANTUMR-77548	14 W	Gold	1487–1950 lm	Flood 21°, Medium Flood 32°, Wide Flood 54°
QUANTUMR-77651	14 W	Anodic bronze	1471–1930 lm	Flood 21°, Medium Flood 32°, Wide Flood 54°
QUANTUMR-77572	14 W	Gold	978–1482 lm	Flood 19°, Flood 28°, Medium Wide Flood 46°
QUANTUMR-77652	14 W	Anodic bronze	967–1467 lm	Flood 19°, Flood 28°, Medium Wide Flood 46°

MASSBILDER (mm)

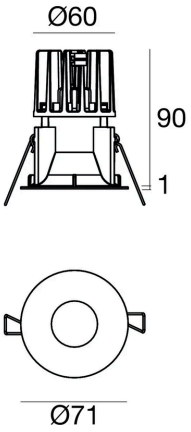

4 W / 9 W / 11 W

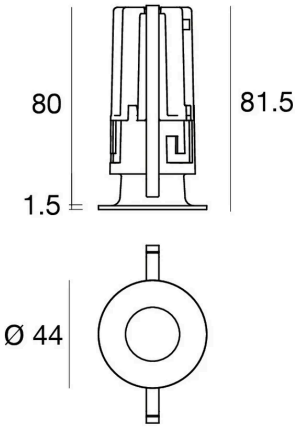

6 W

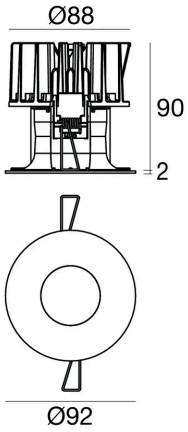

14 W

Lichttechnische Werte sind Bemessungswerte, Toleranz ± 10 %. Farbe, Lichtfarbe und Optik bei der Bestellung angeben. Anschluss durch eine Elektrofachperson. Technische Änderungen vorbehalten.