9555
GALASSIA
rev:00

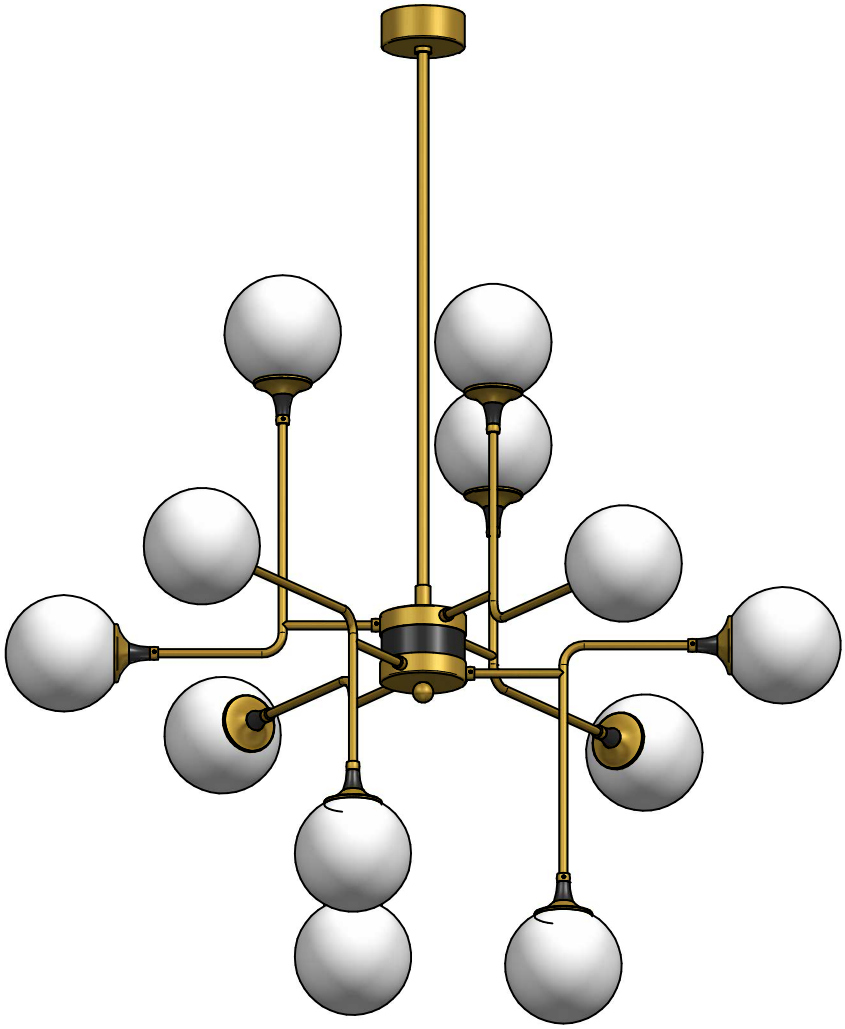

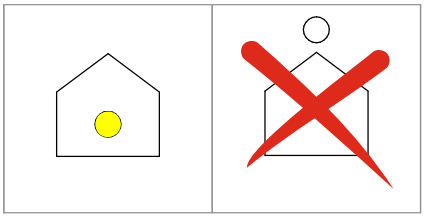

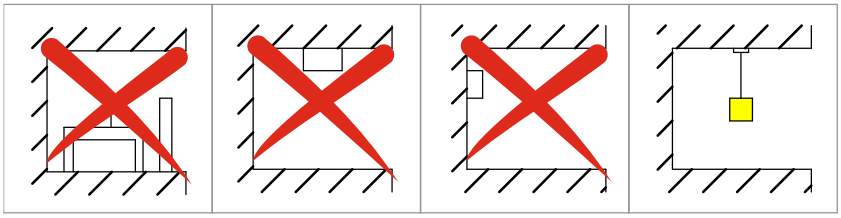

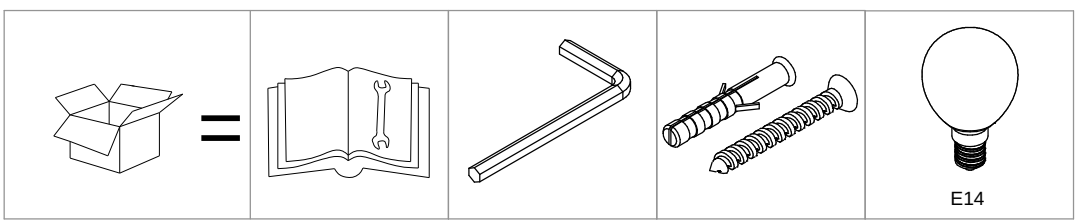

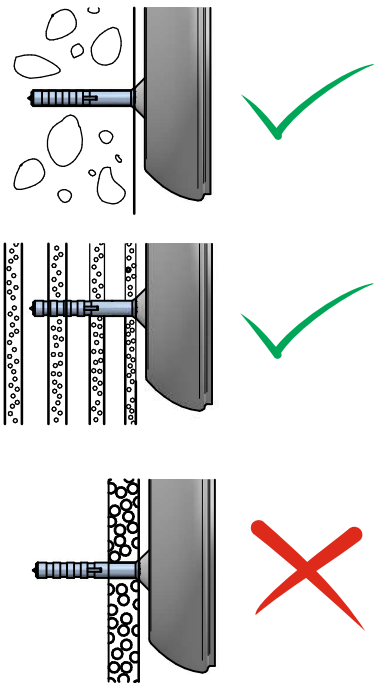

9555
GALASSIA
rev:00

1

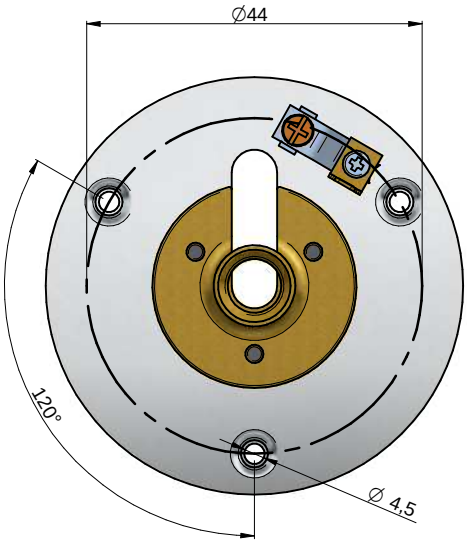

2

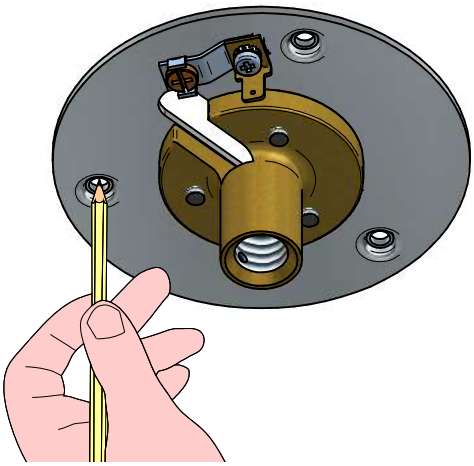

3

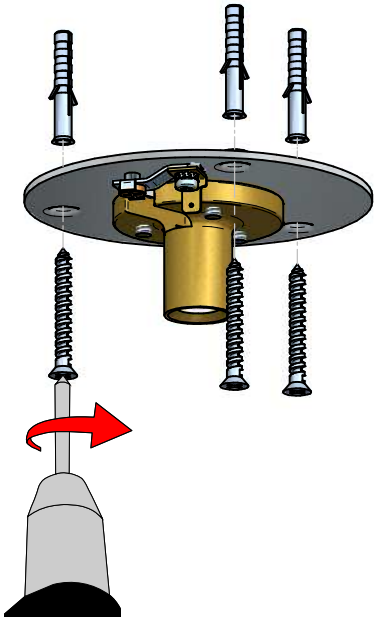

4

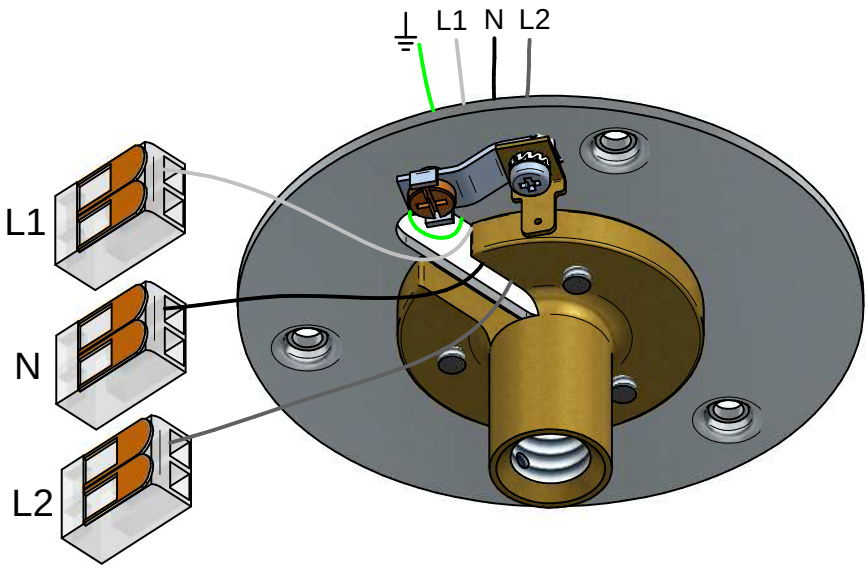

5

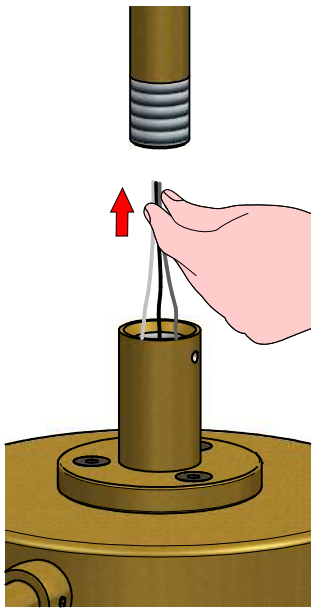



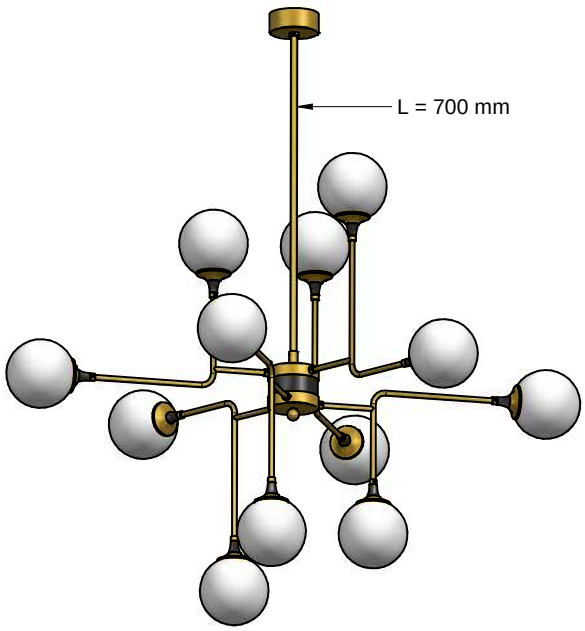

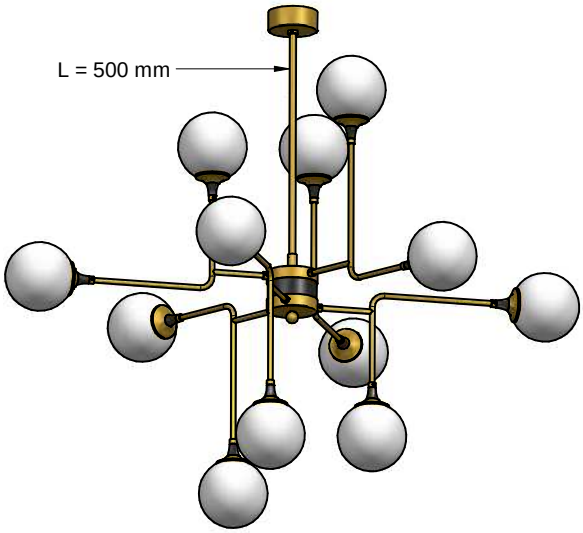

6

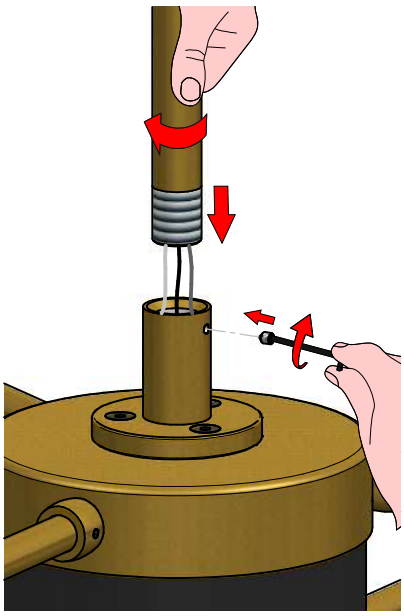

7

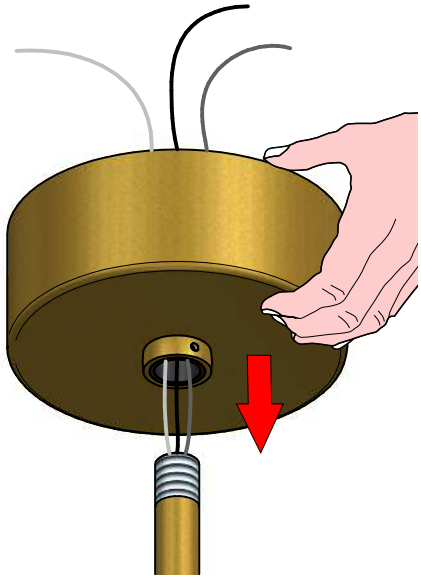

8

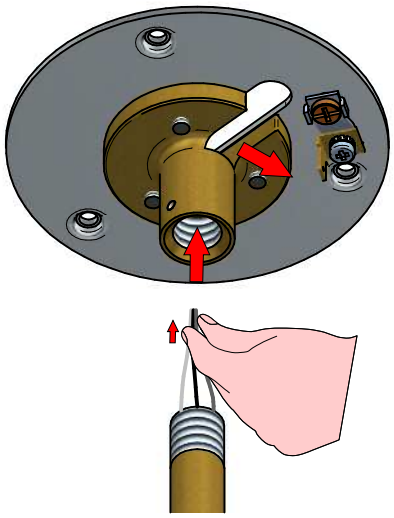

9

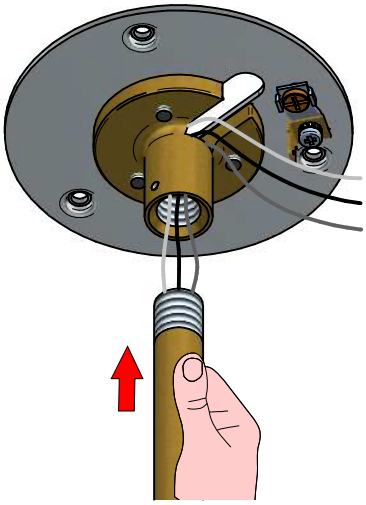

10

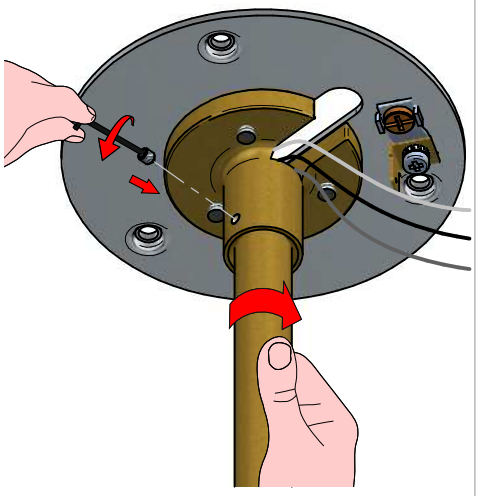

11

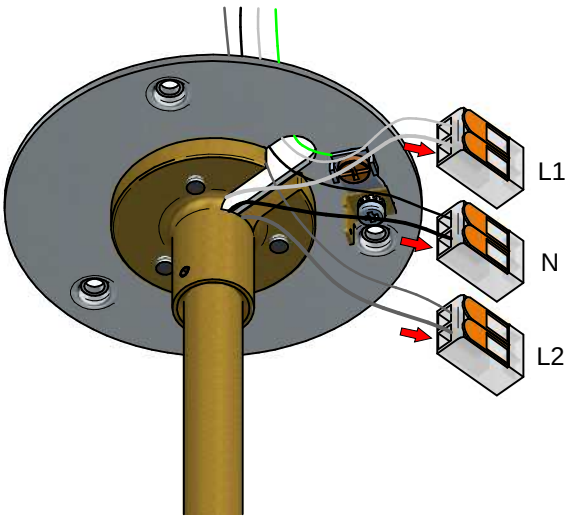

12

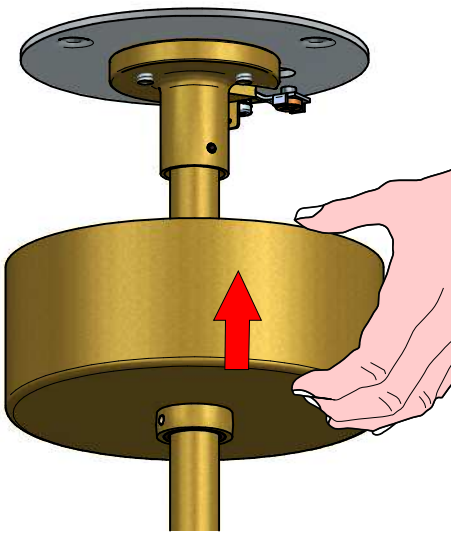

13

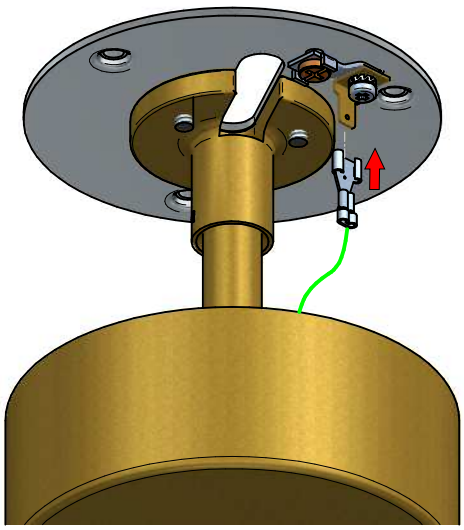

14

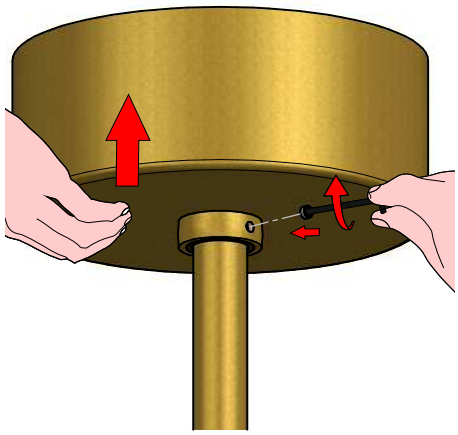

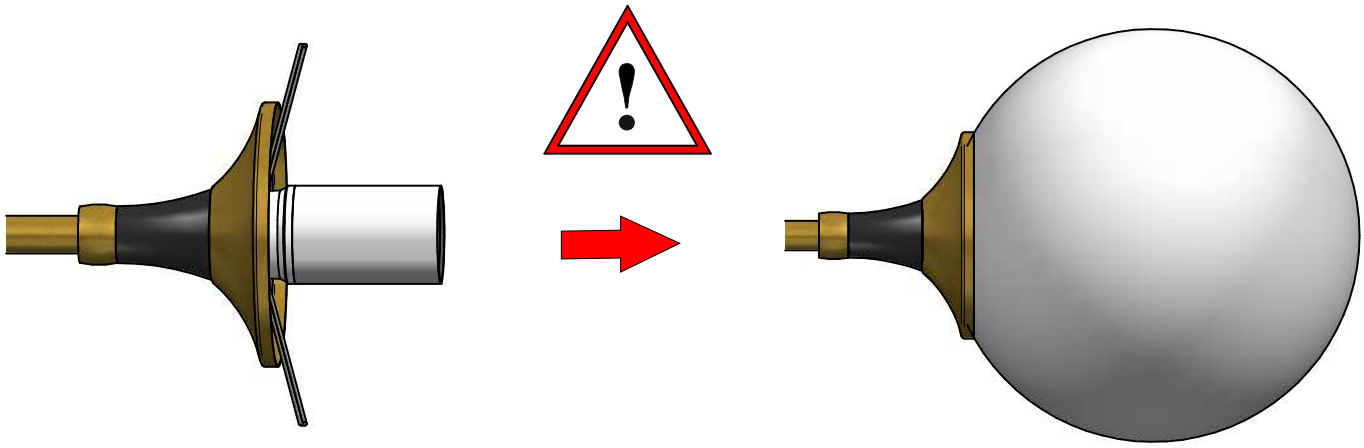

1

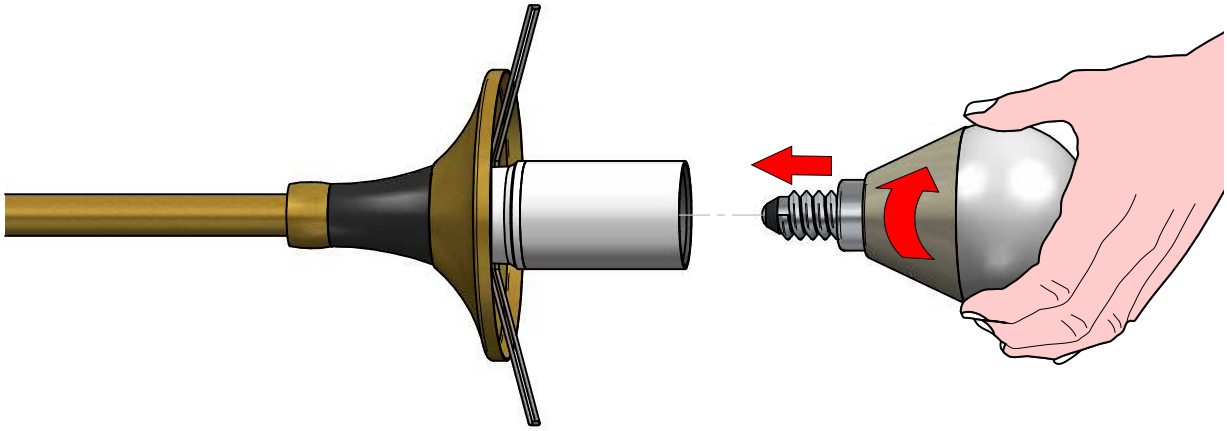

2

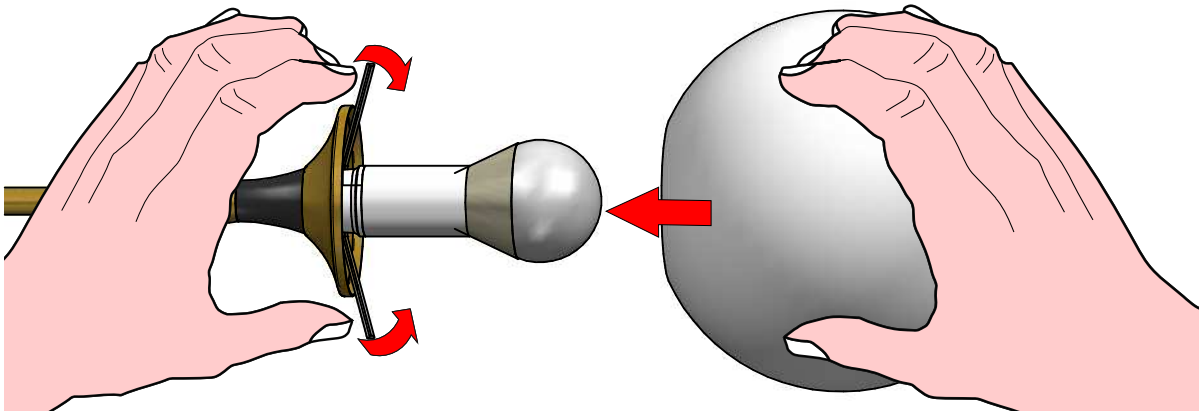

3

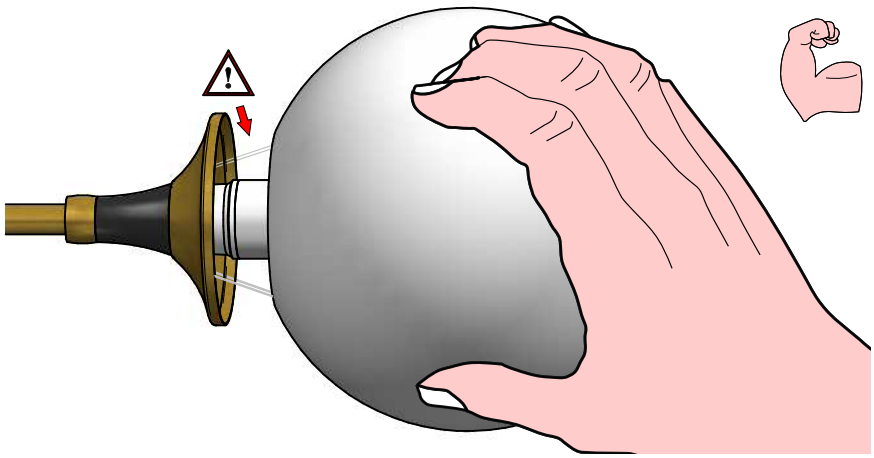

OFF OFF

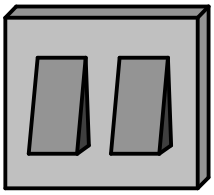

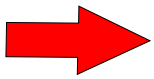

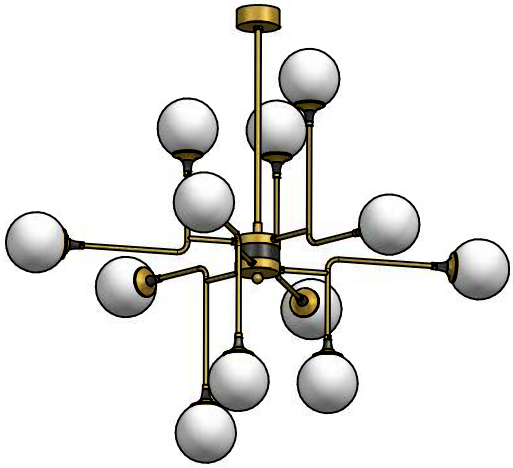

ON OFF

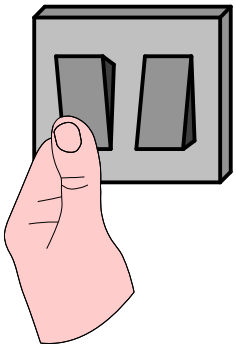

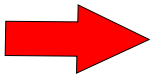

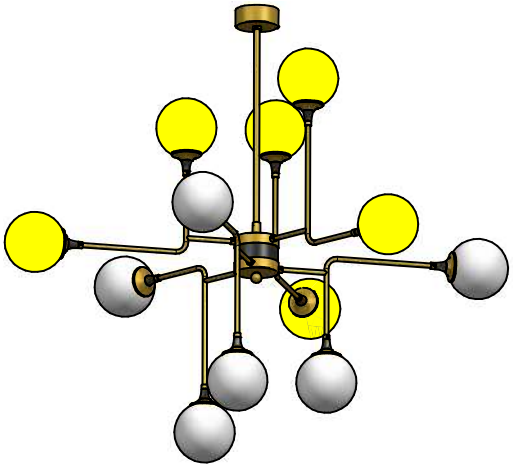

OFF ON

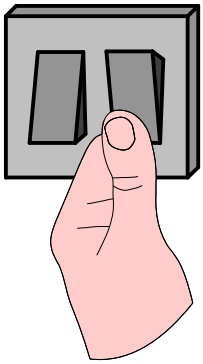

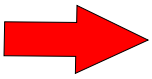

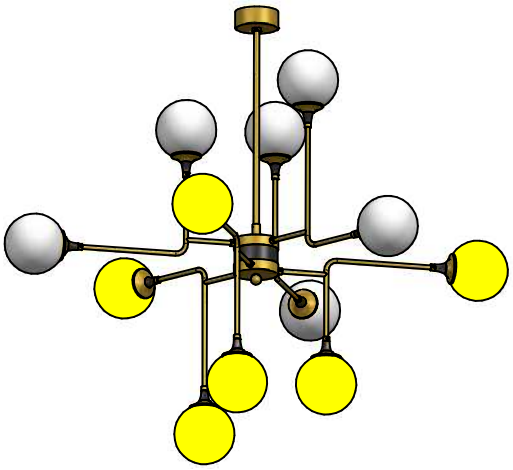

ON ON

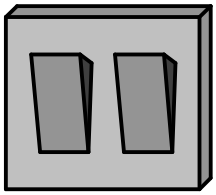

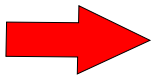

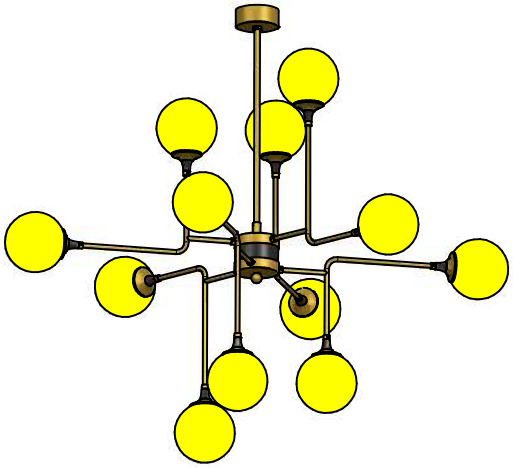

9556
GALASSIA
rev:00

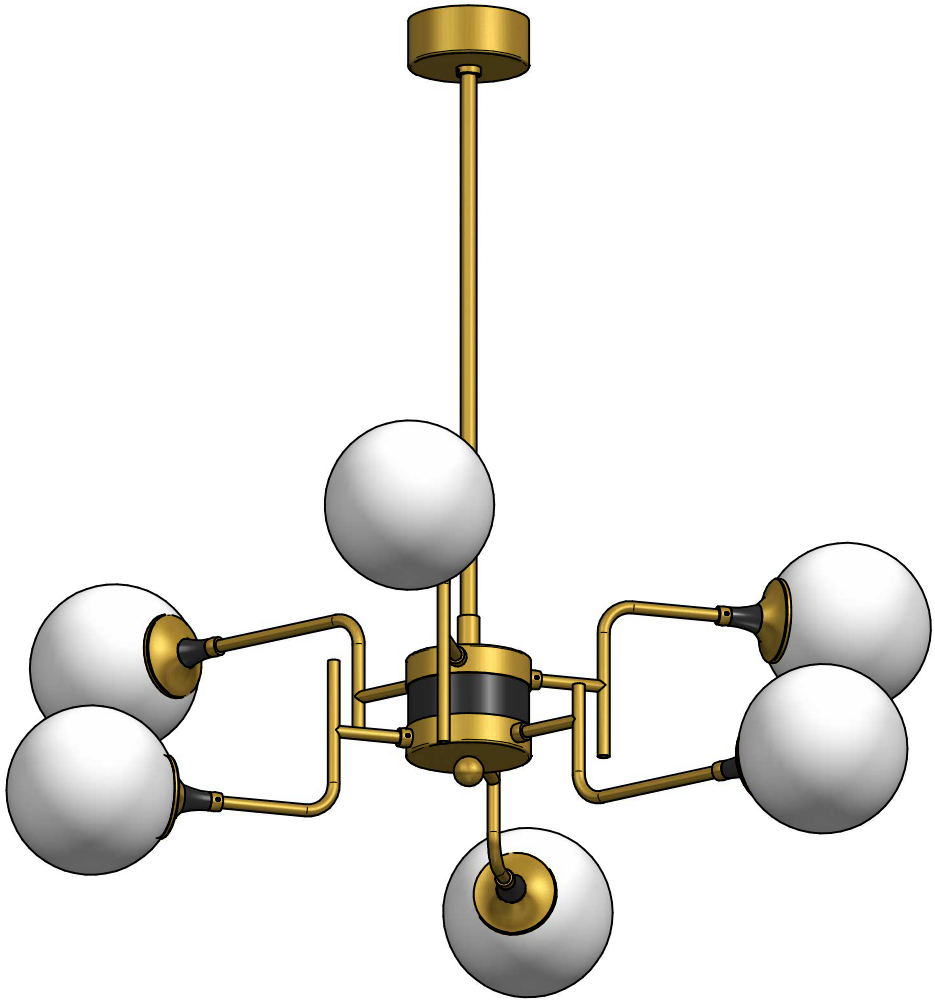

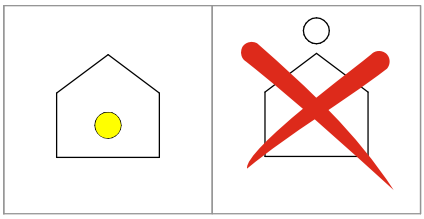

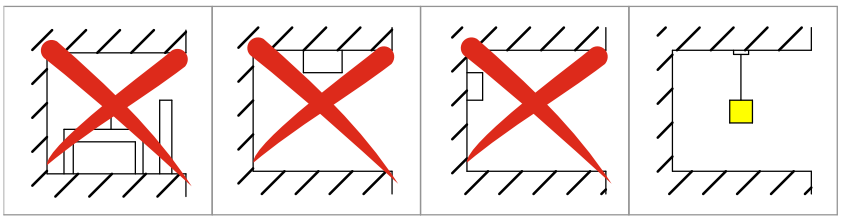

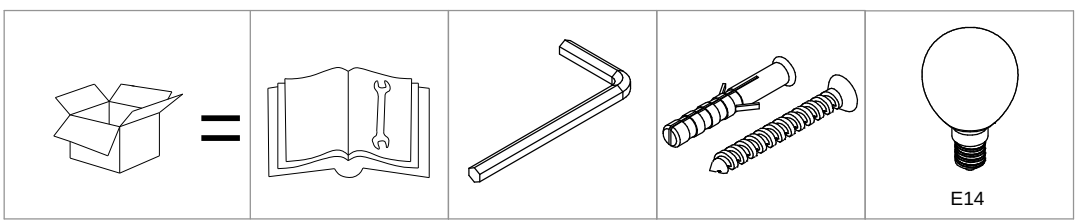

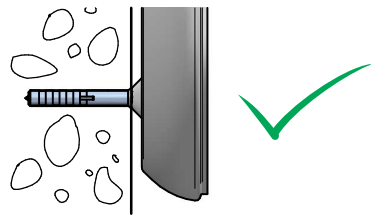

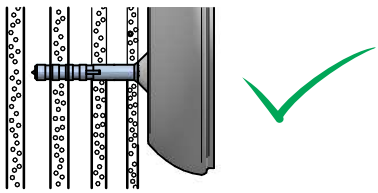

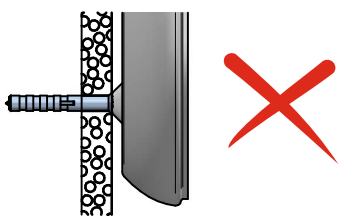

9556
GALASSIA
rev:00

1

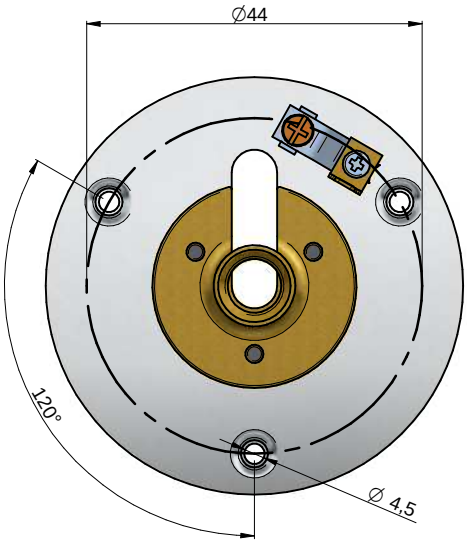

2

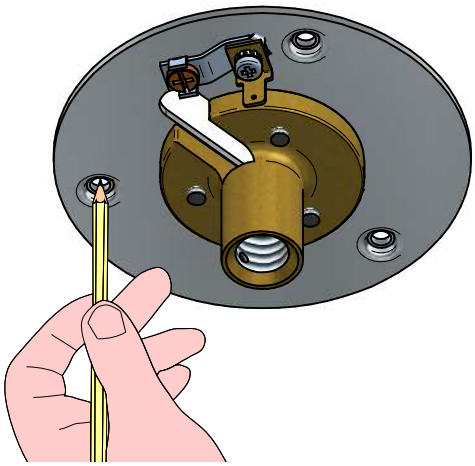

3

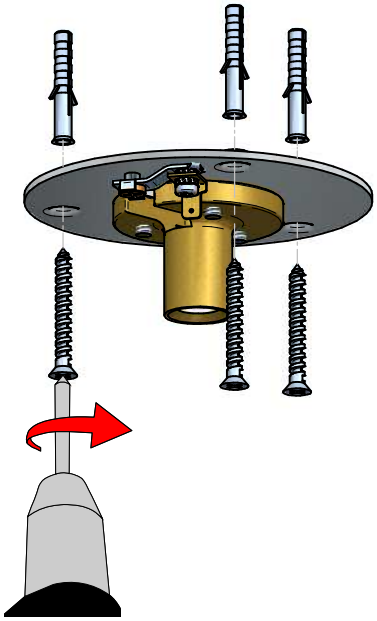

4

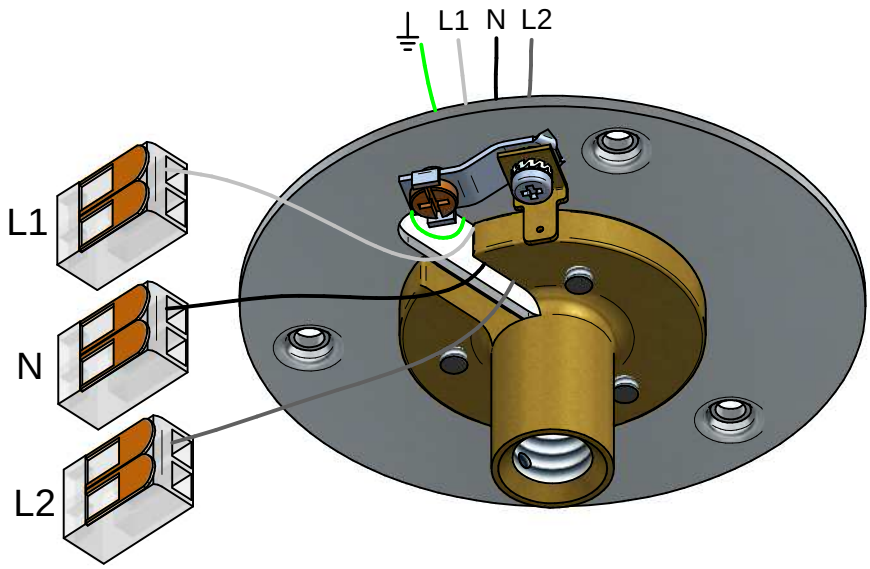

5

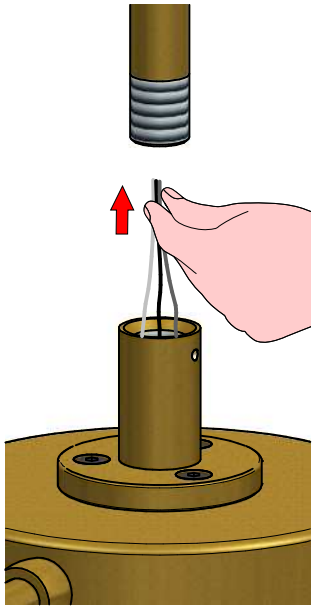



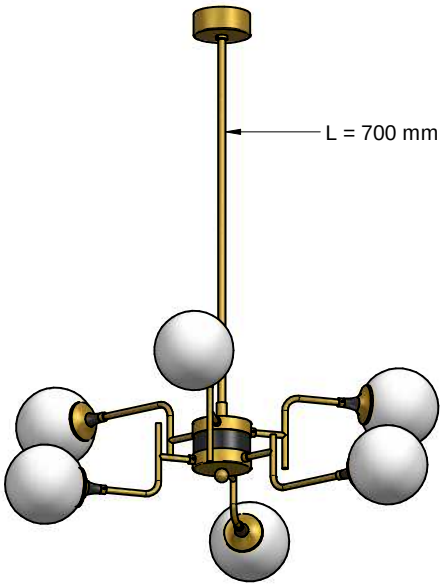

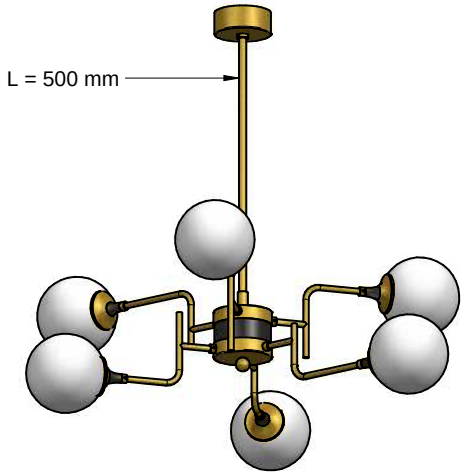

6

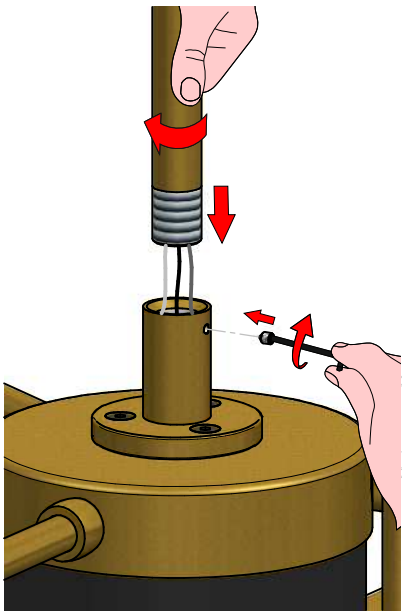

7

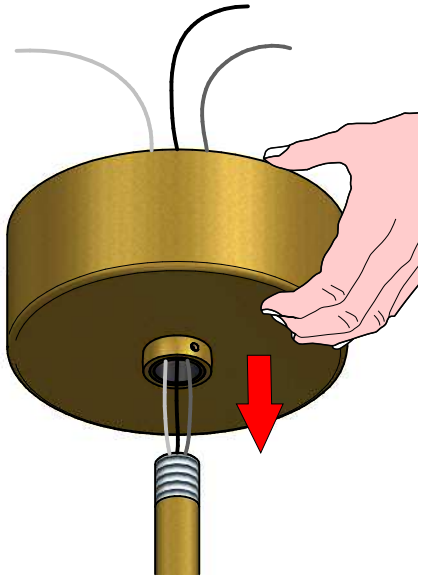

8

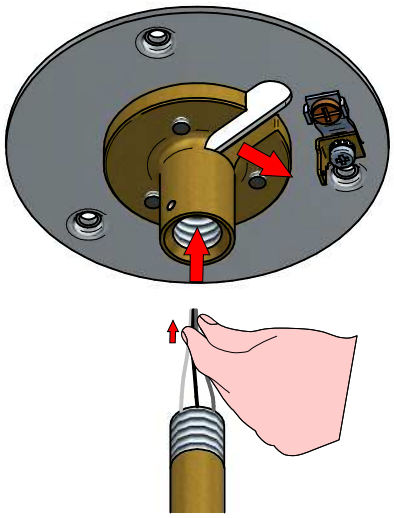

9

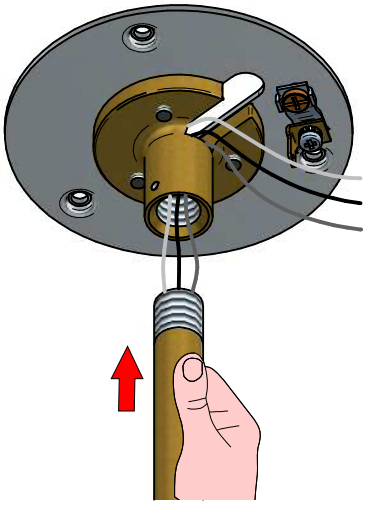

10

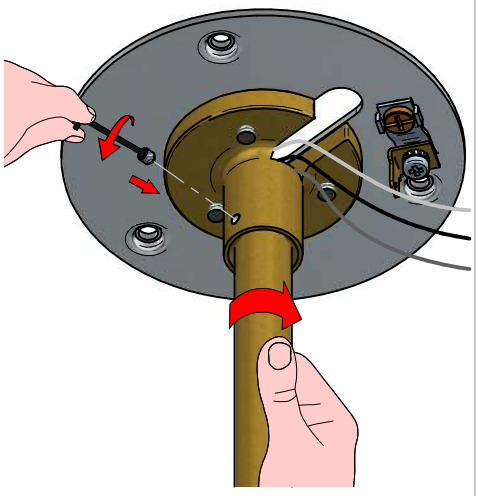

11

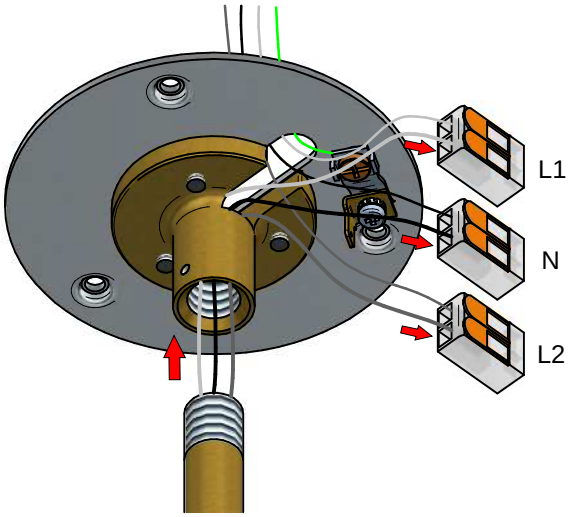

12

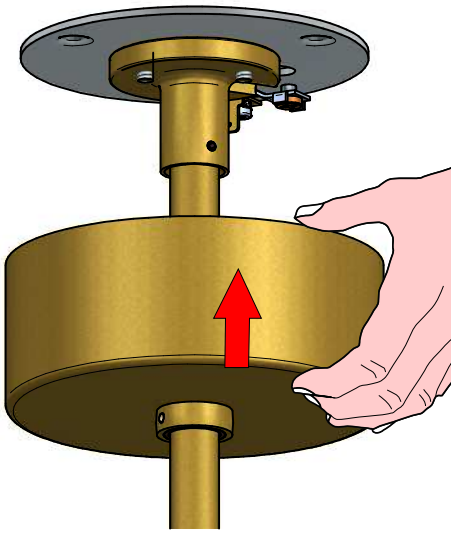

13

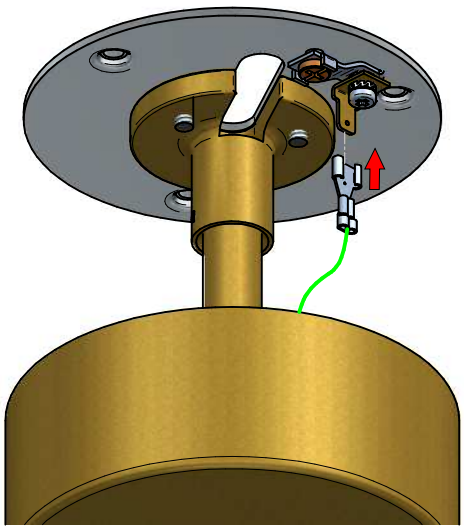

14

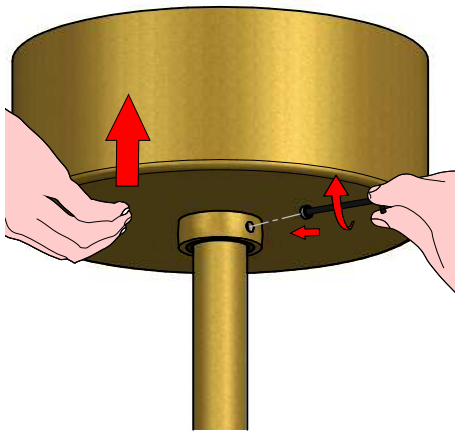

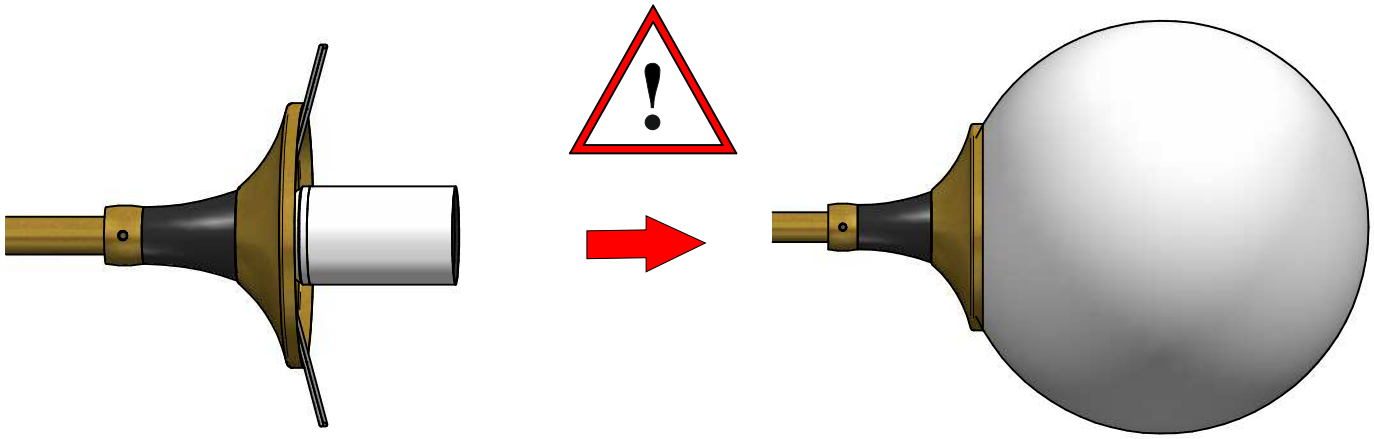

1

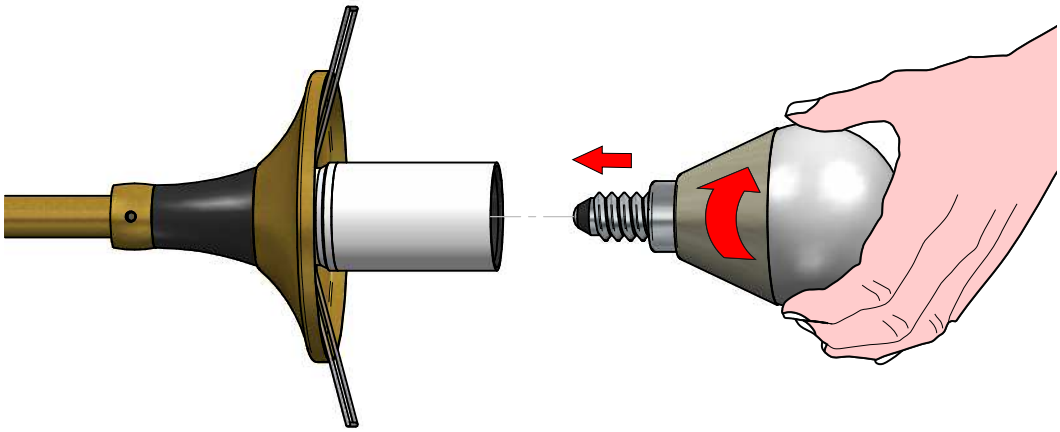

2

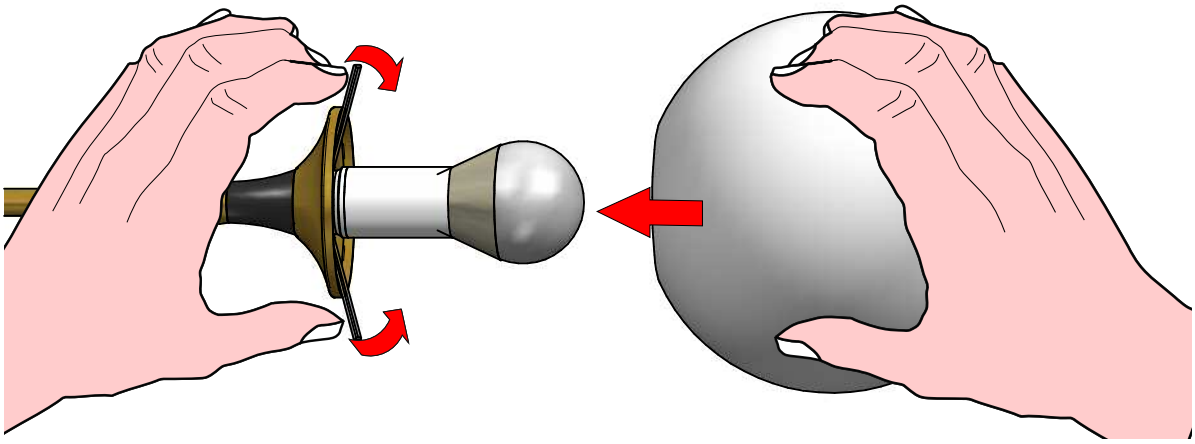

3

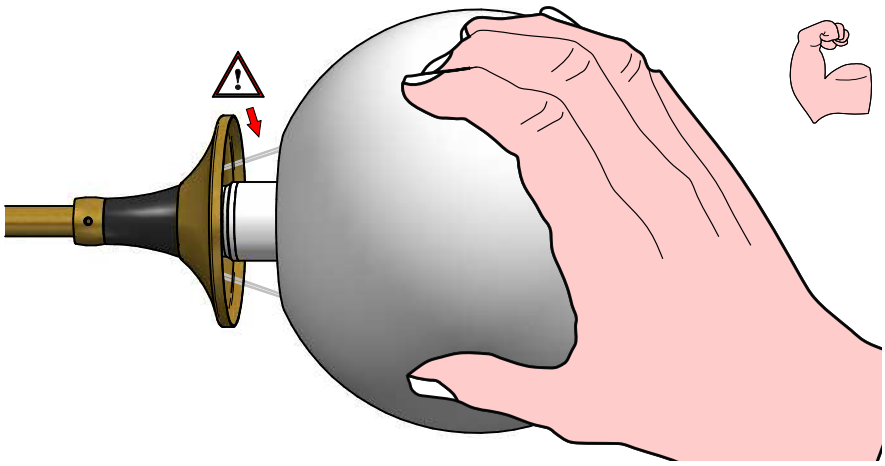

OFF OFF

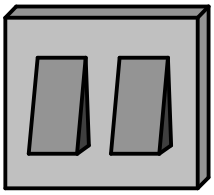

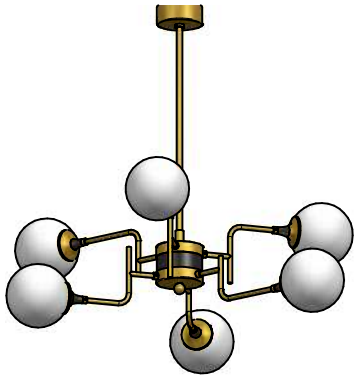

ON OFF

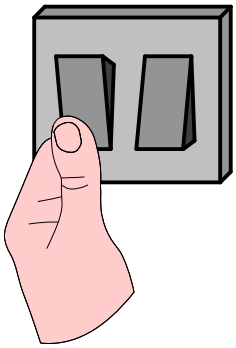

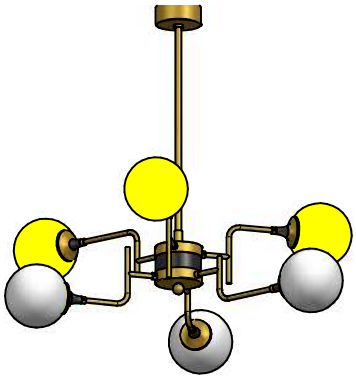

OFF ON

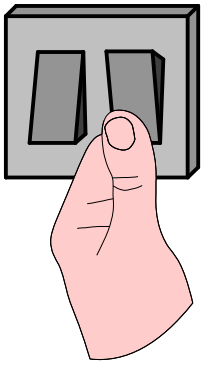

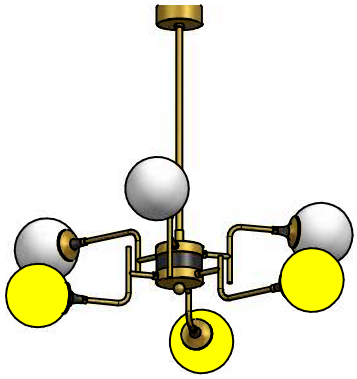

ON ON

