8089
OXYGEN
rev: 02

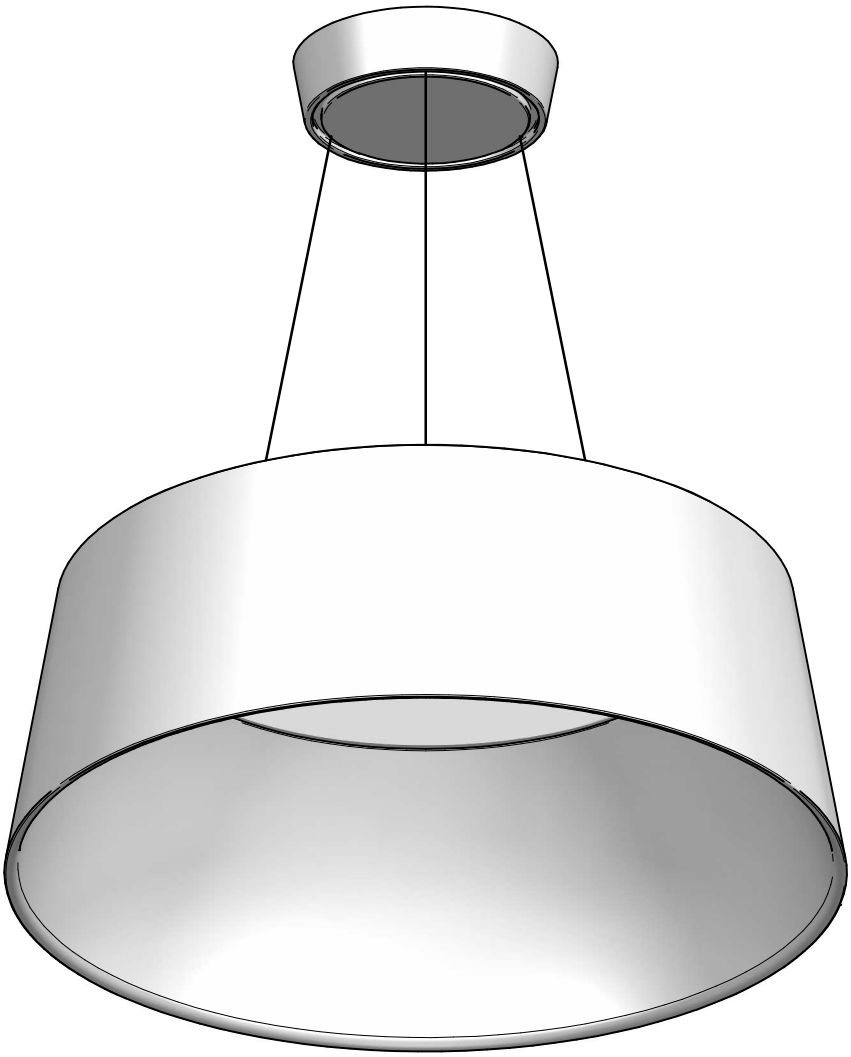

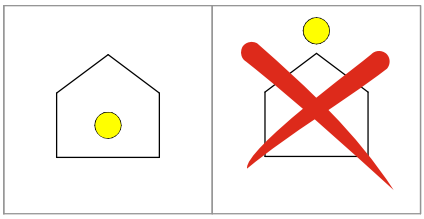

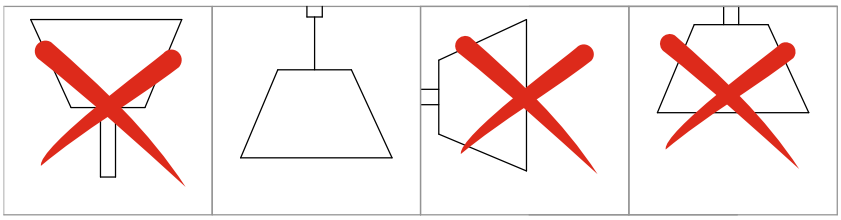

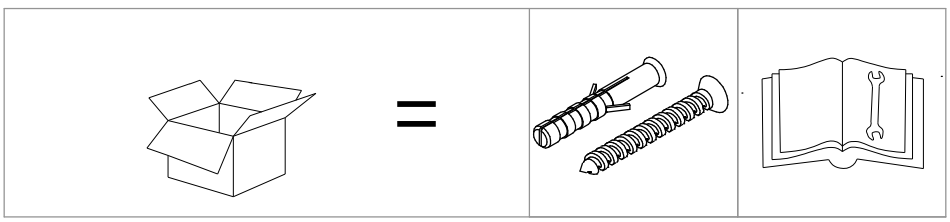

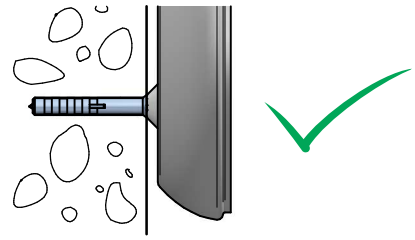

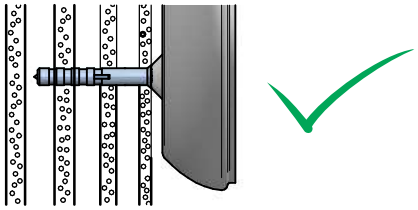

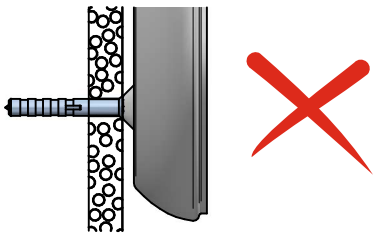

1

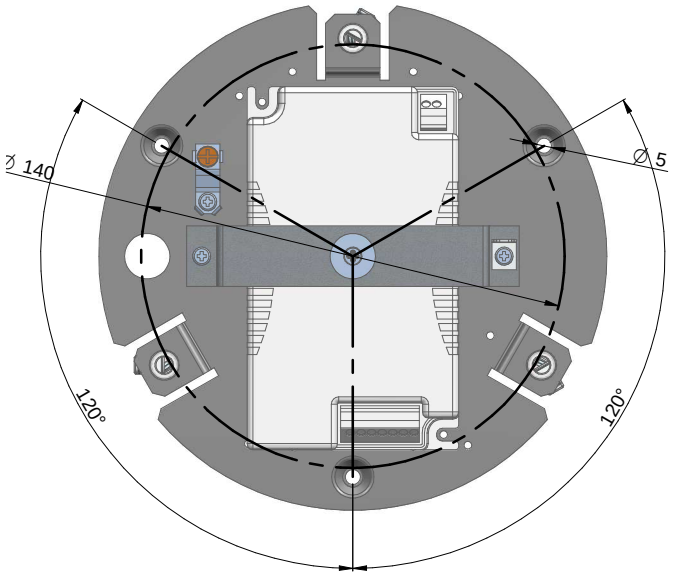

2

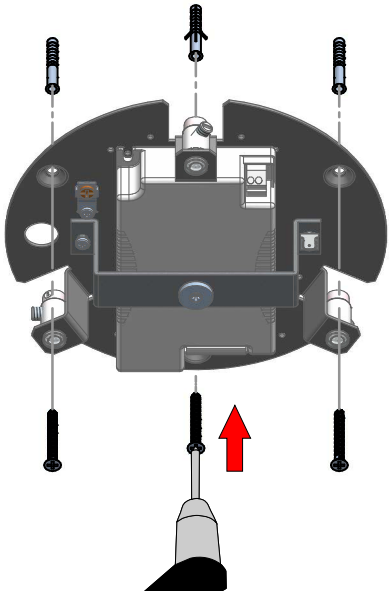

3

DALI

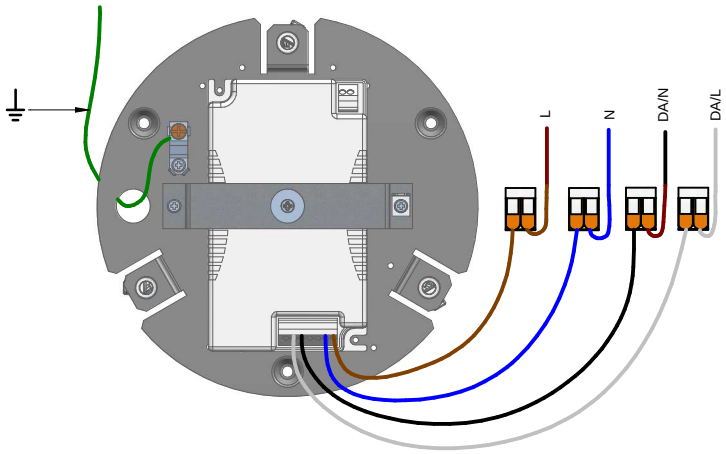

PUSH-DIM

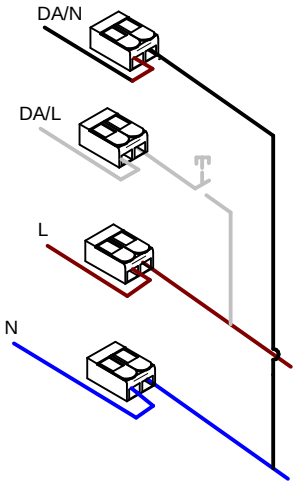

ON/OFF

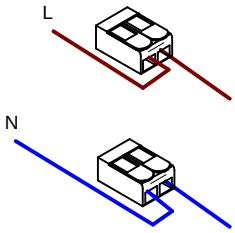

4

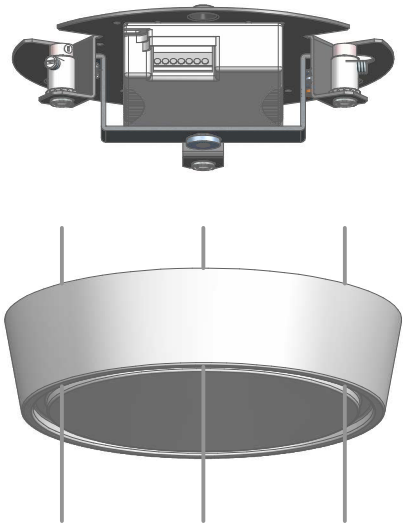

5

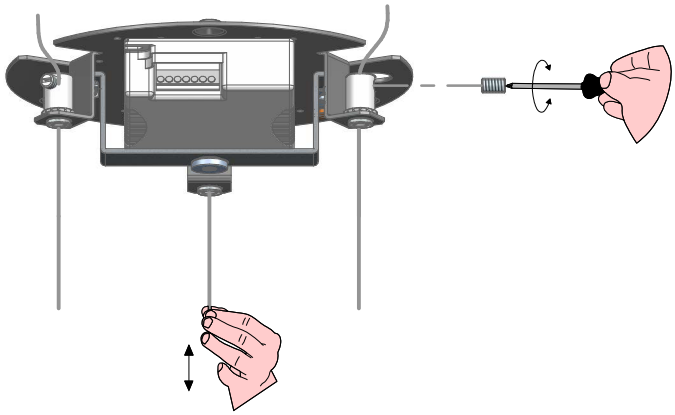

6

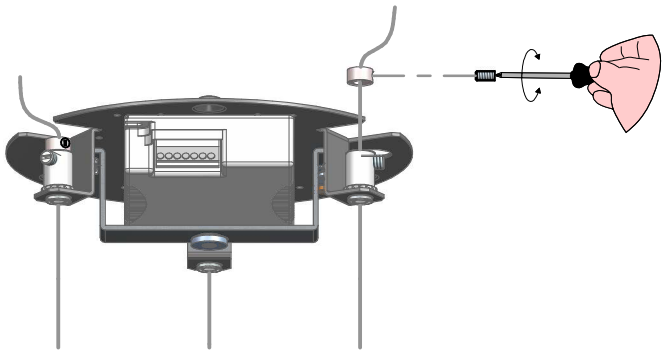

7

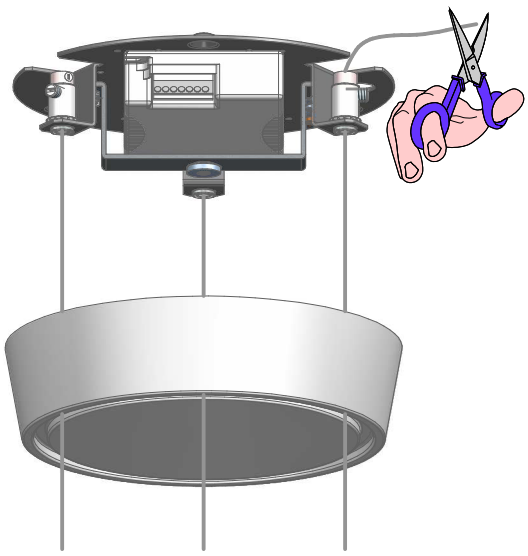

8

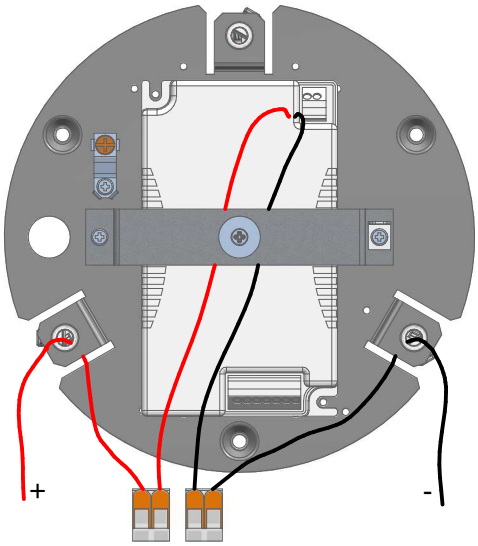

9

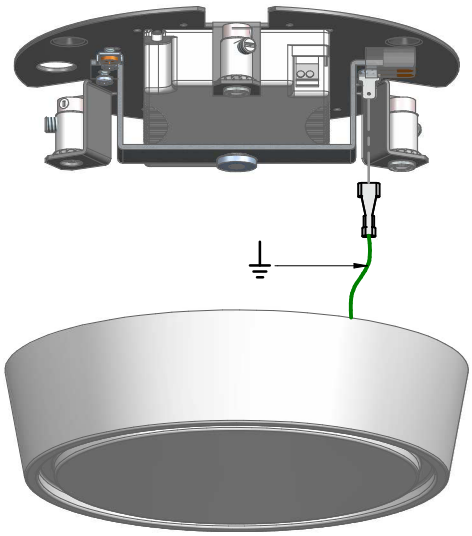

10

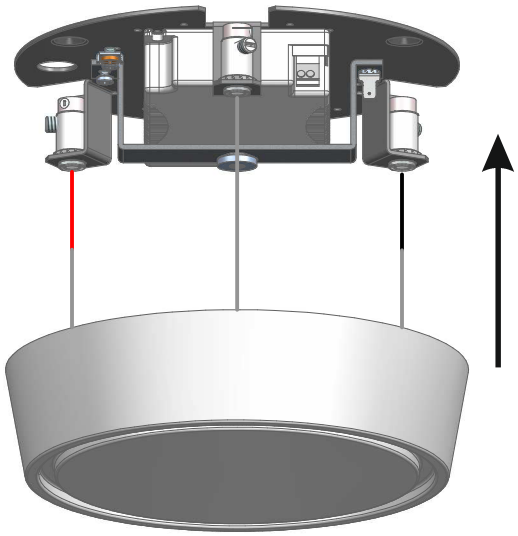

KIT0079 - CASAMBI

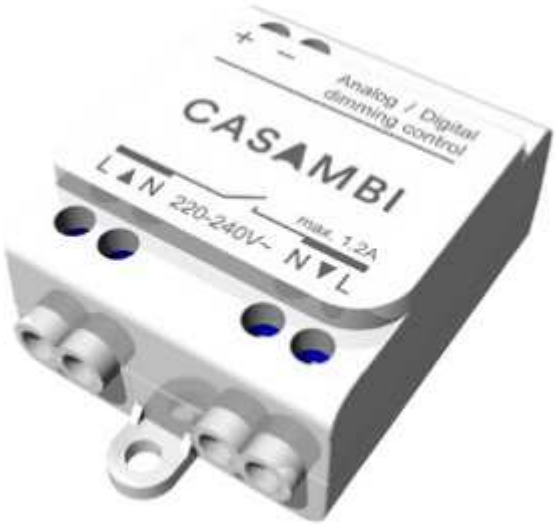

DALI / 1-10V

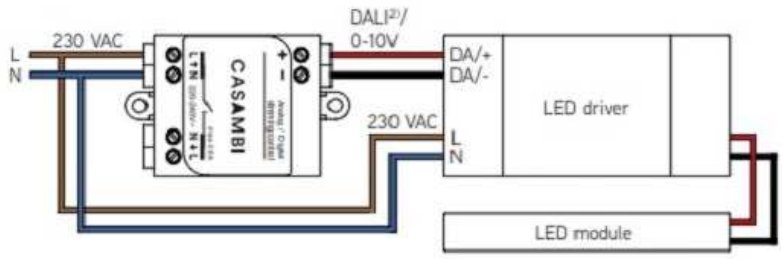



DALI / 1-10V

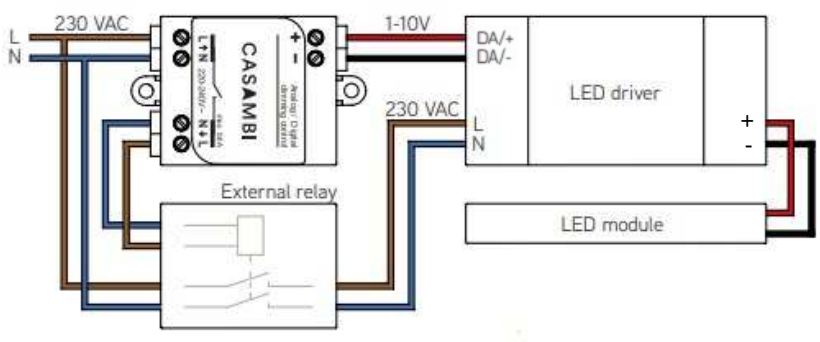



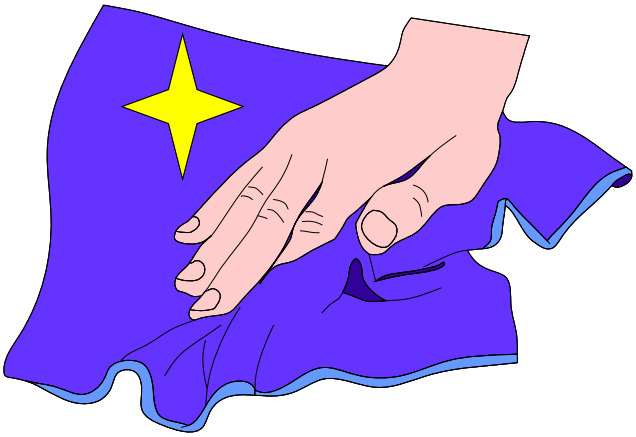



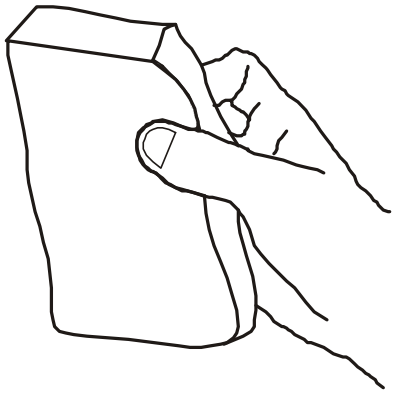

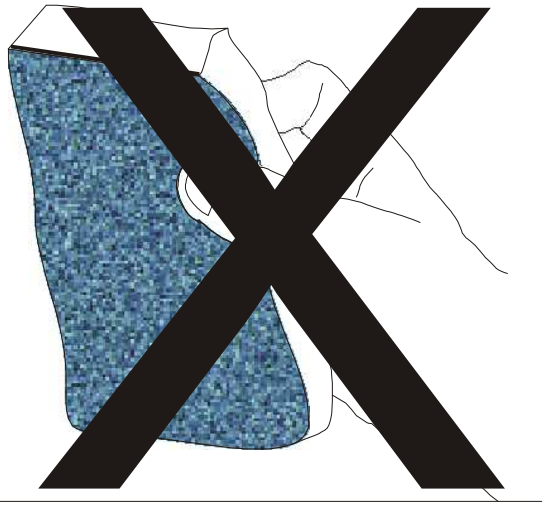



8090
OXYGEN
rev: 02

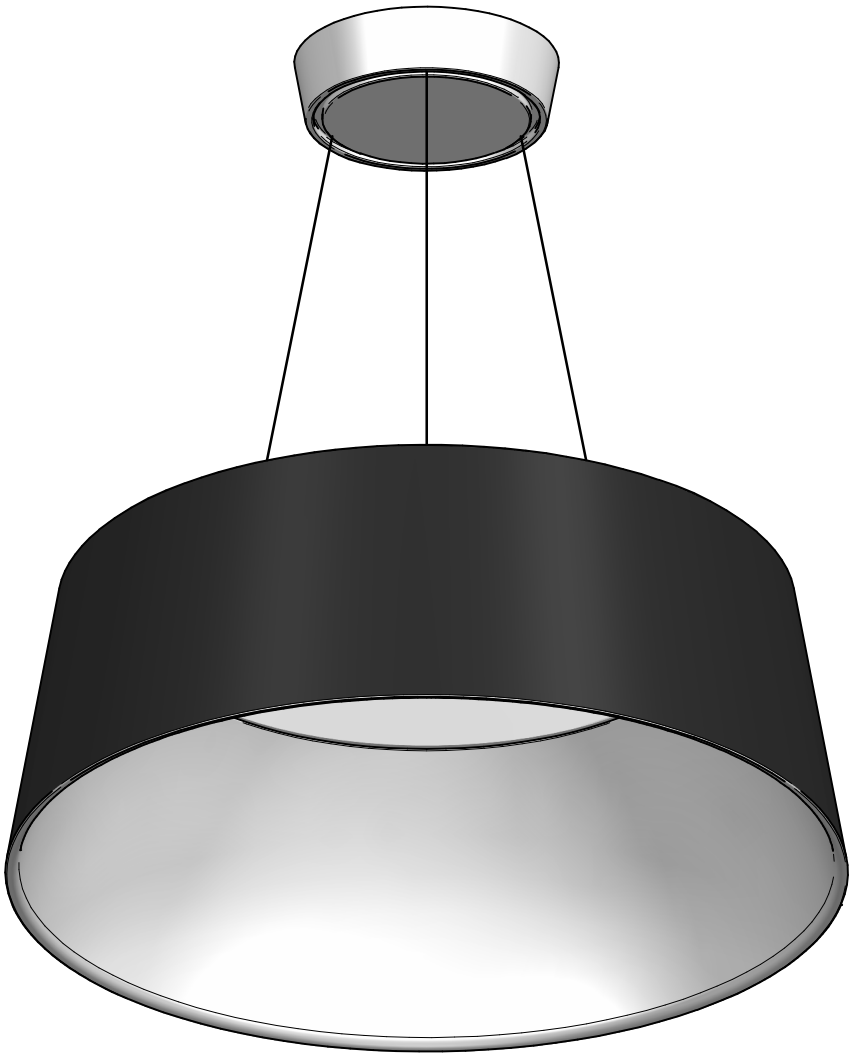

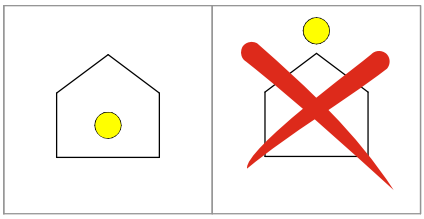

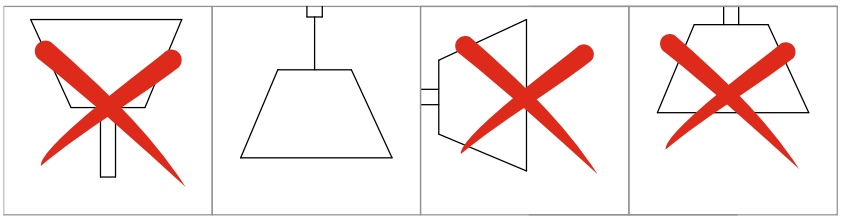

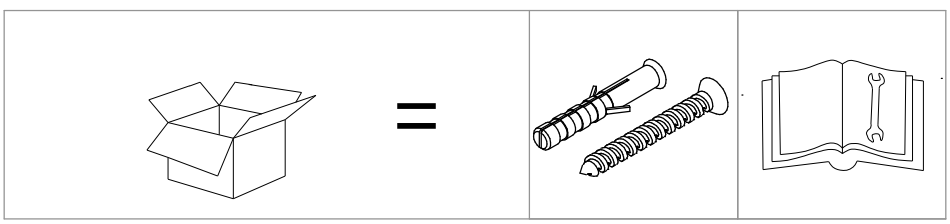

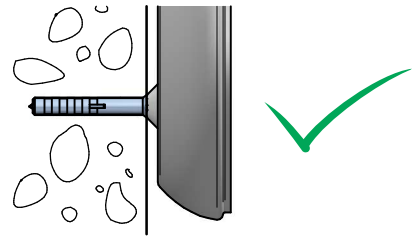

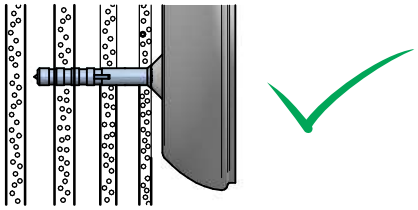

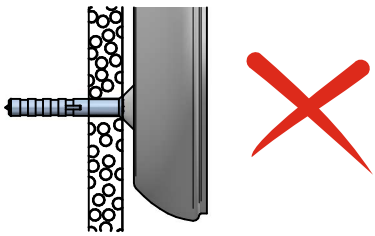

1

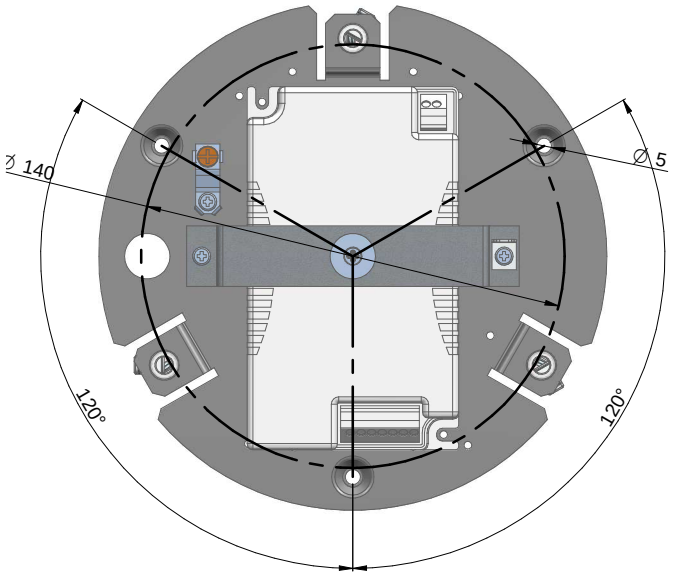

2

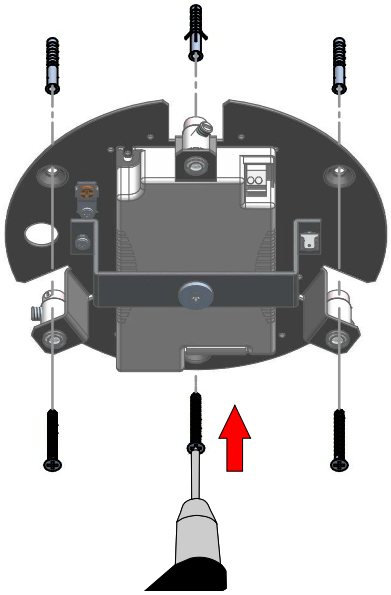

3

DALI

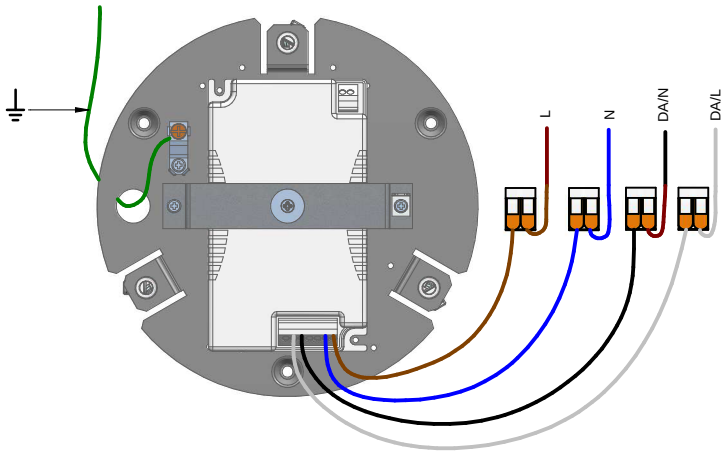

PUSH-DIM

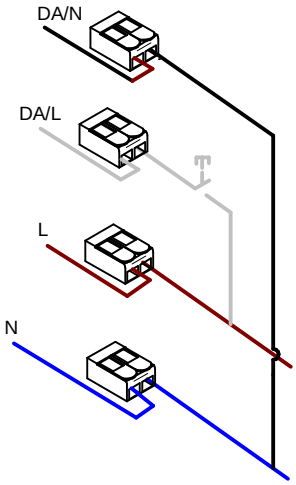

ON/OFF

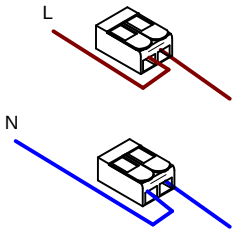

4

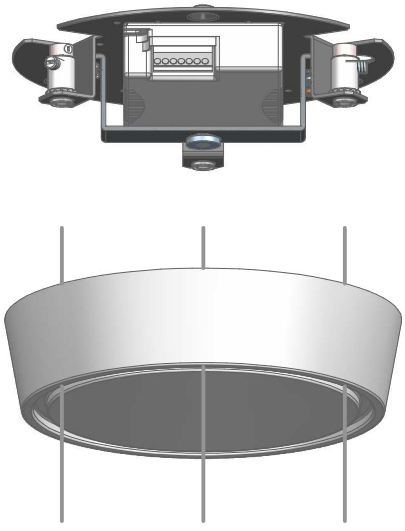

5

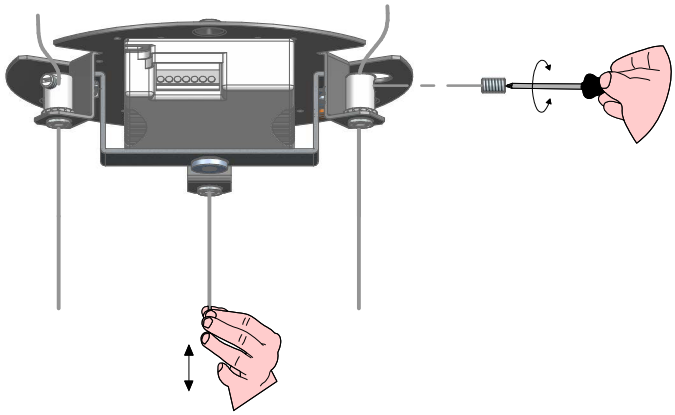

6

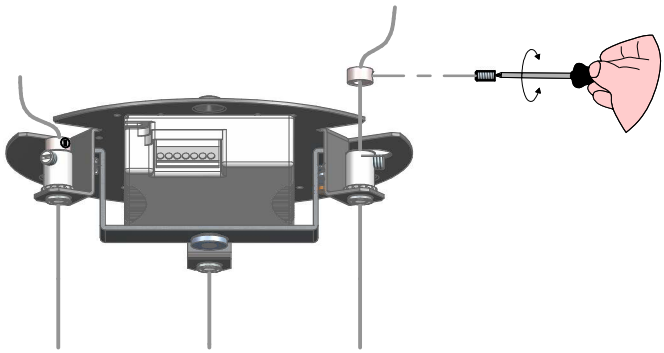

7

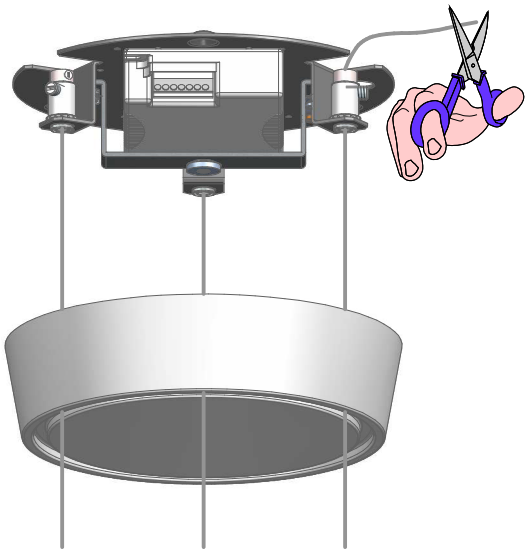

8

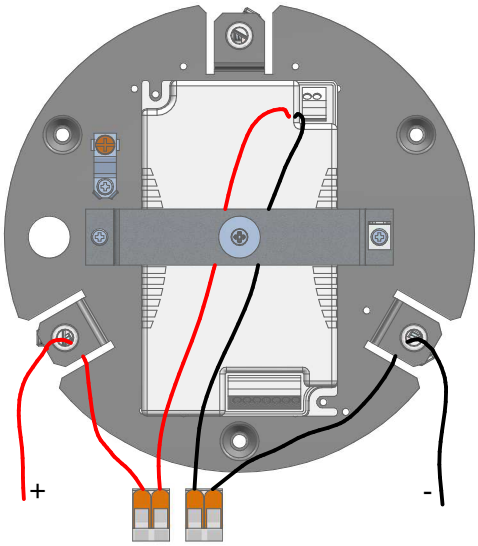

9

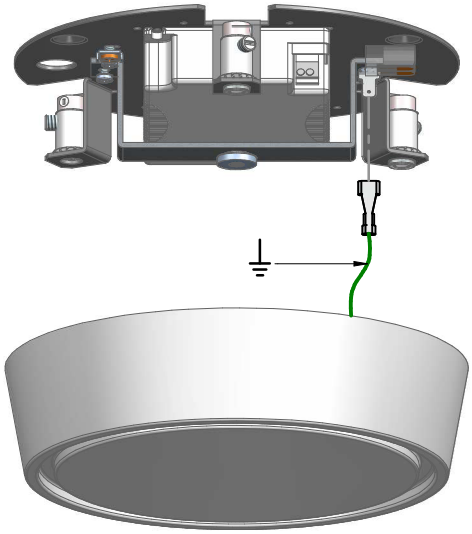

10

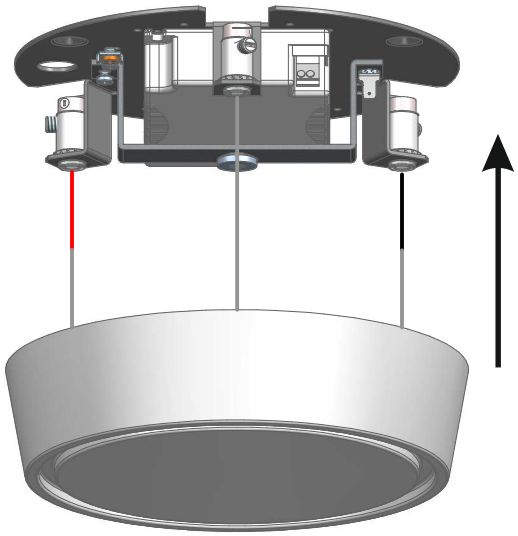

KIT0079 - CASAMBI

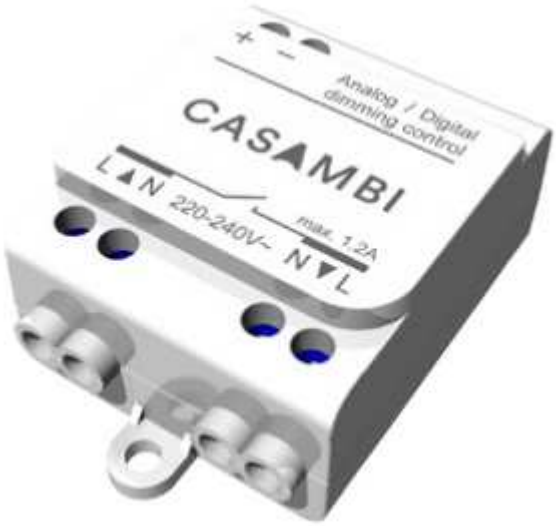

DALI / 1-10V

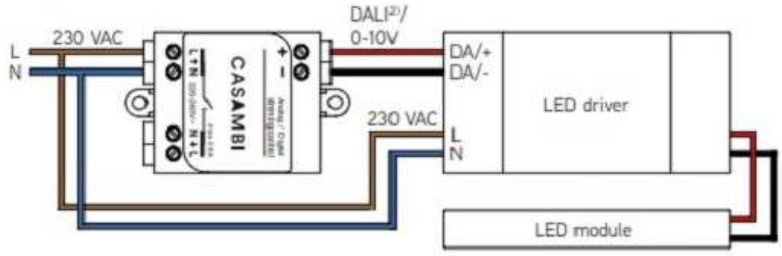



DALI / 1-10V

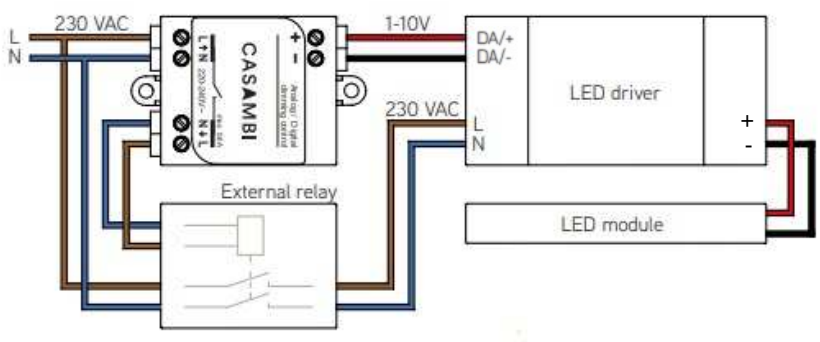



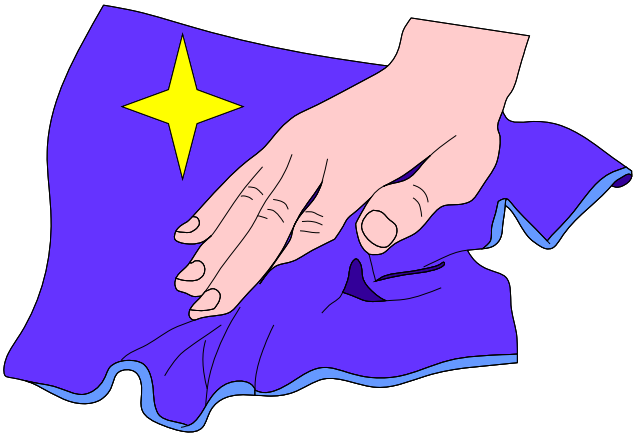



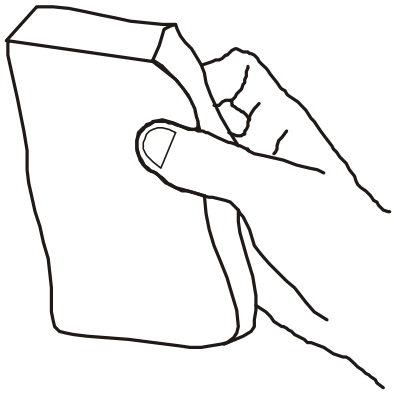

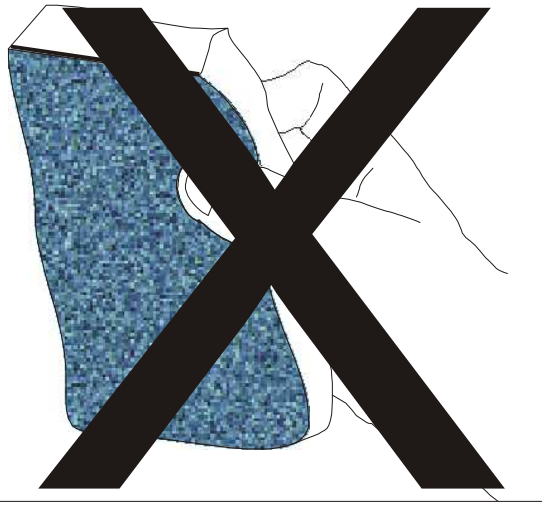



8093
OXYGEN
rev:01

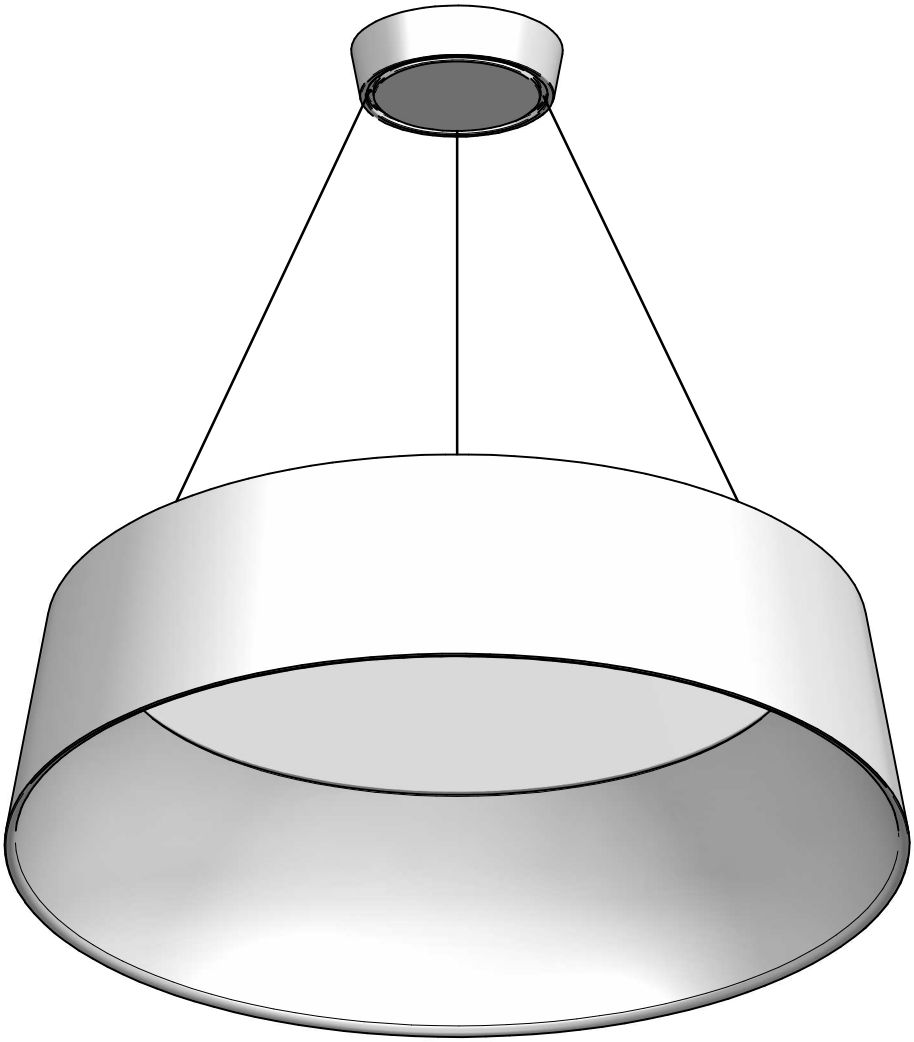

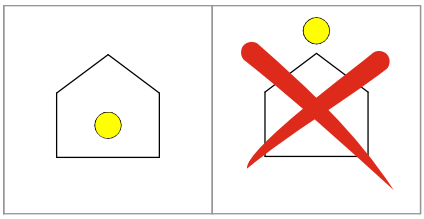

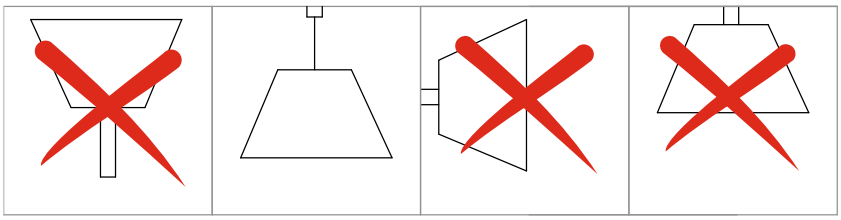

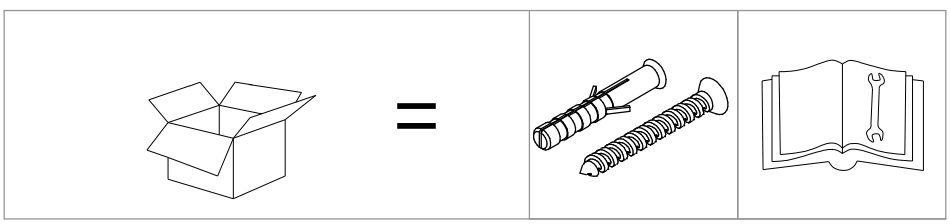

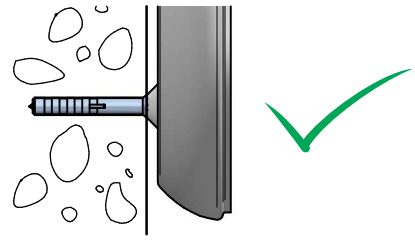

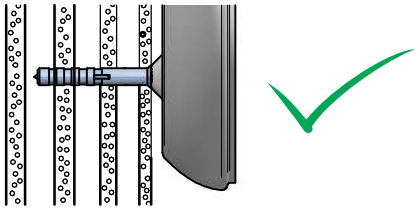

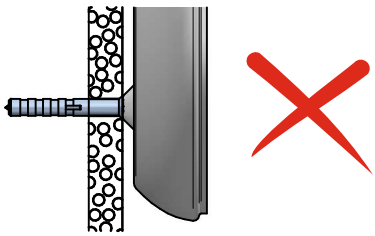

1

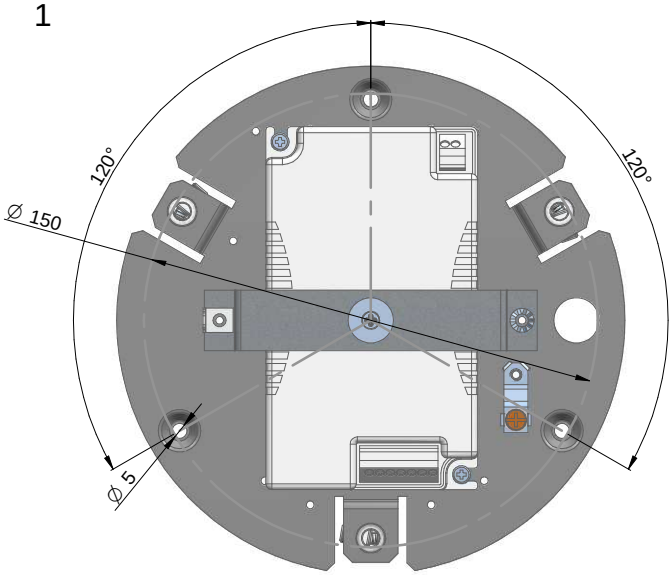

2

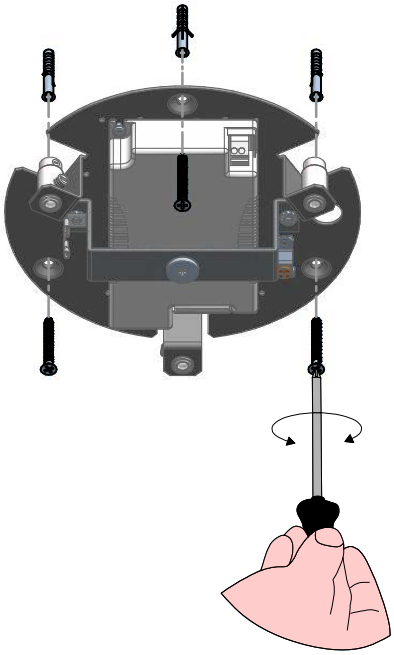

3

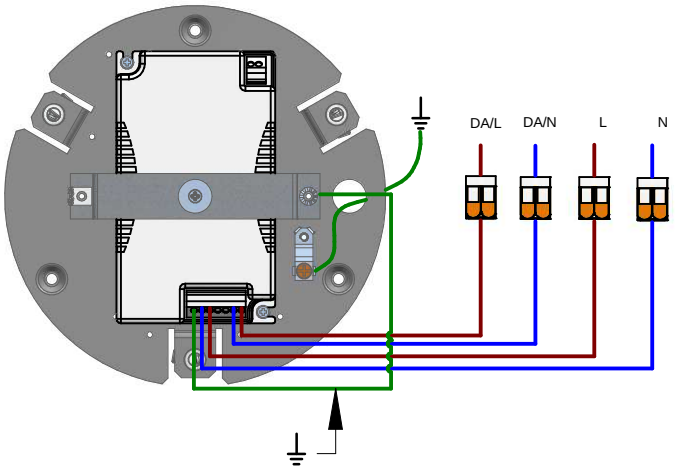

Dali

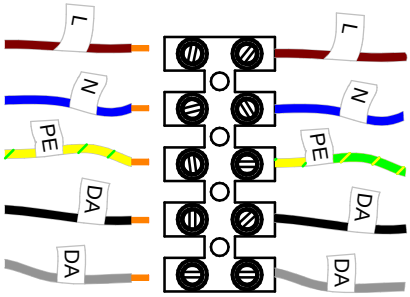

Push-Dim

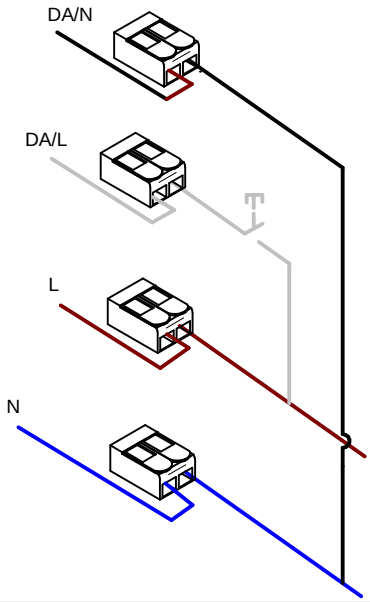

ON/OFF

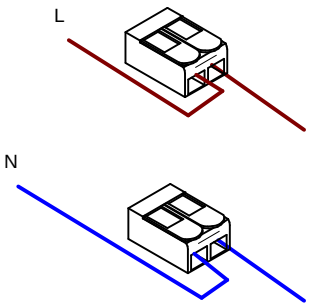

4

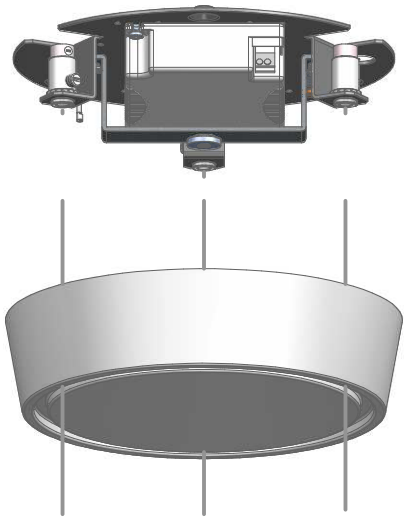

5

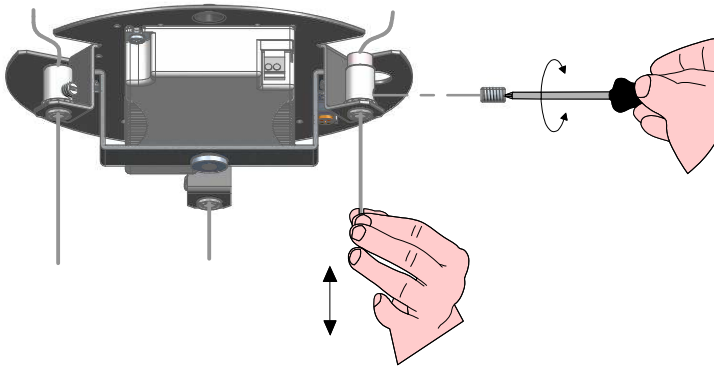

6

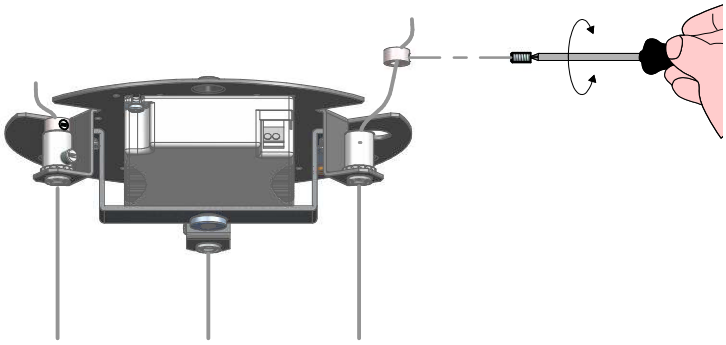

7

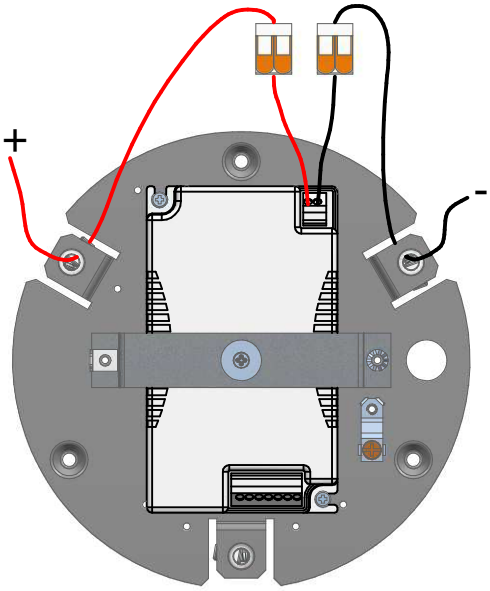

8

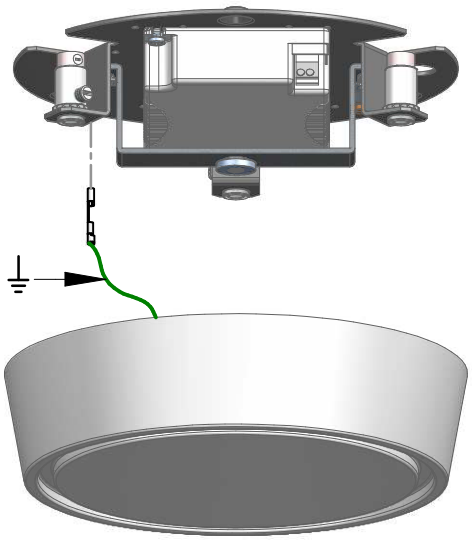

9

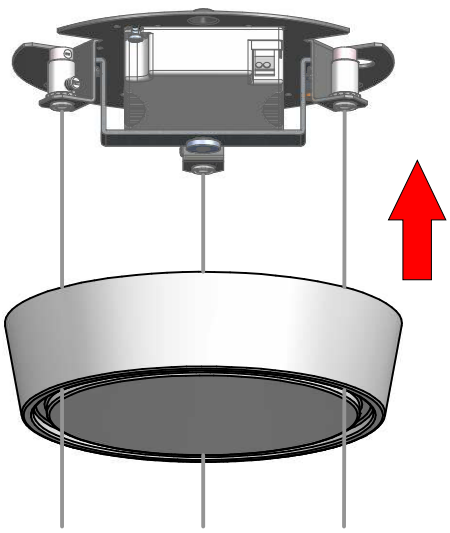

KIT0079 - CASAMBI DALI

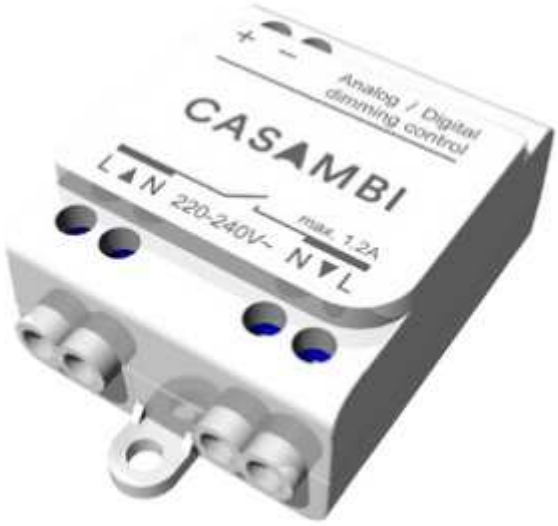

DALI / 1-10V

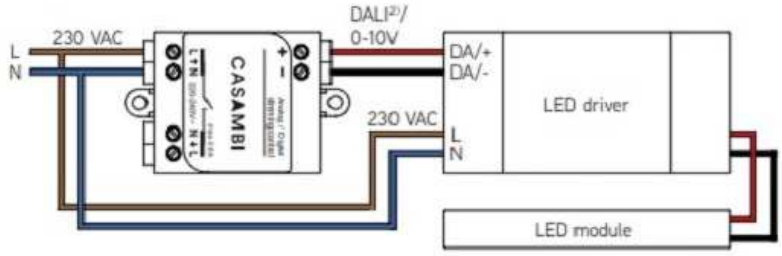



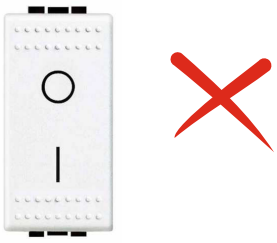

DALI / 1-10V

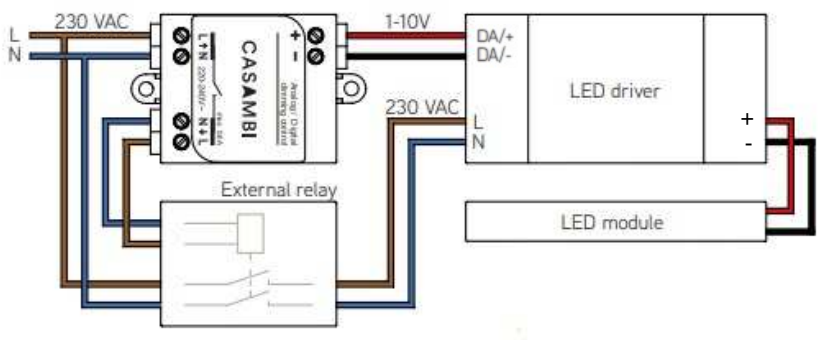



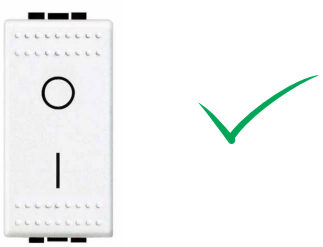

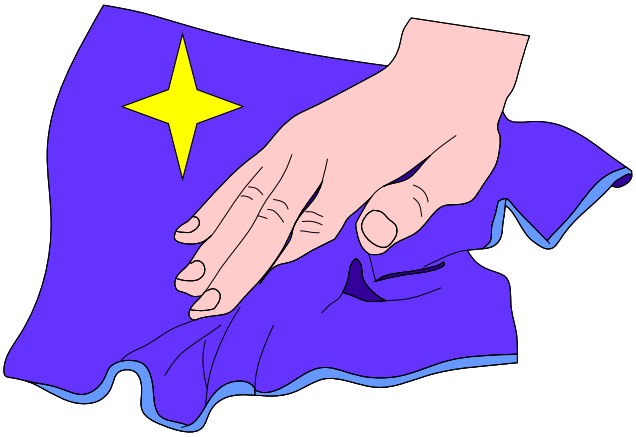



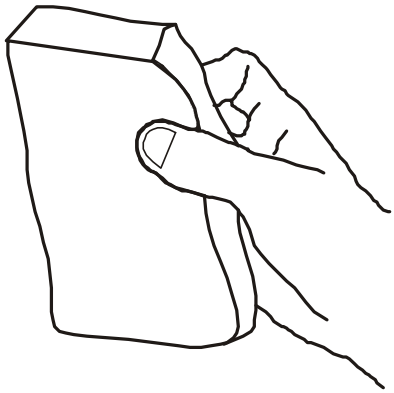

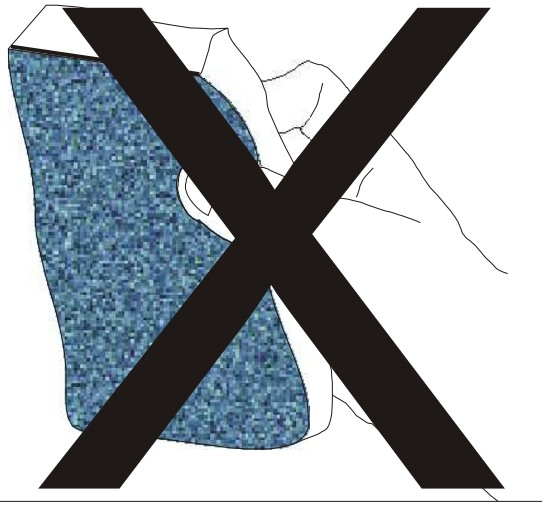



8094
OXYGEN
rev:01

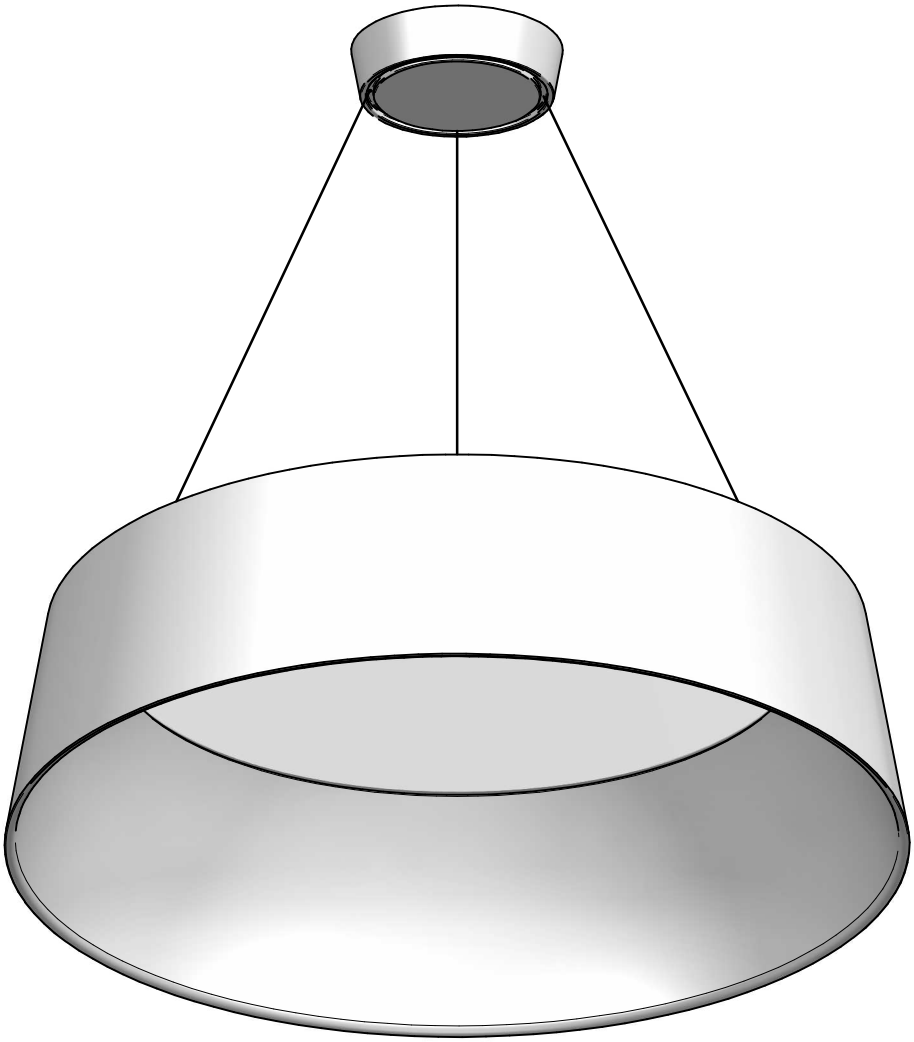

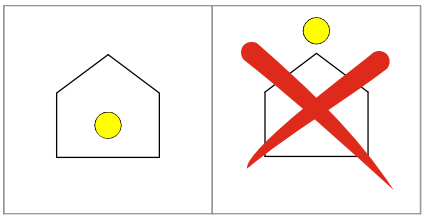

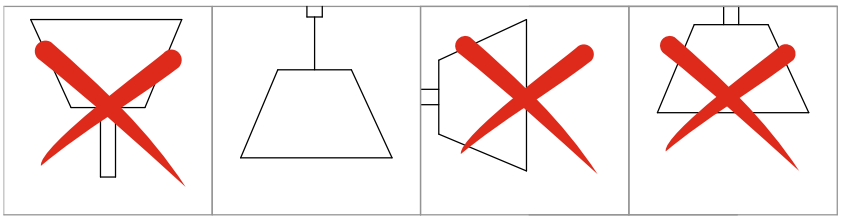

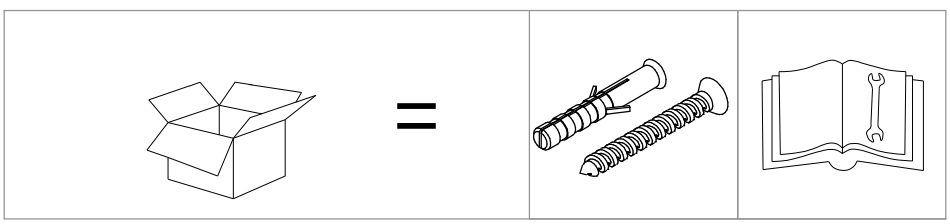

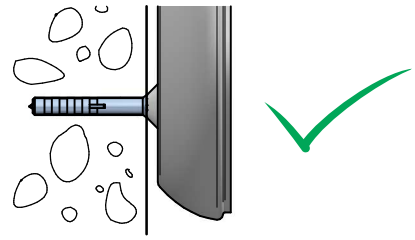

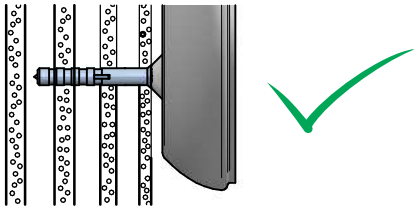

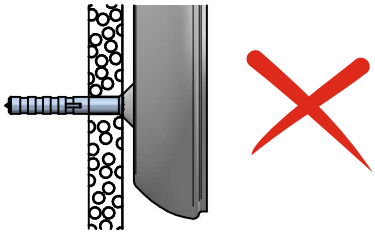

1

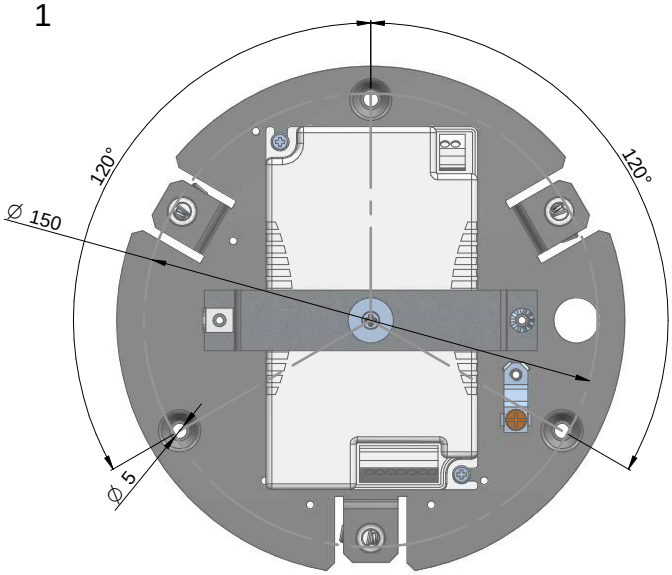

2

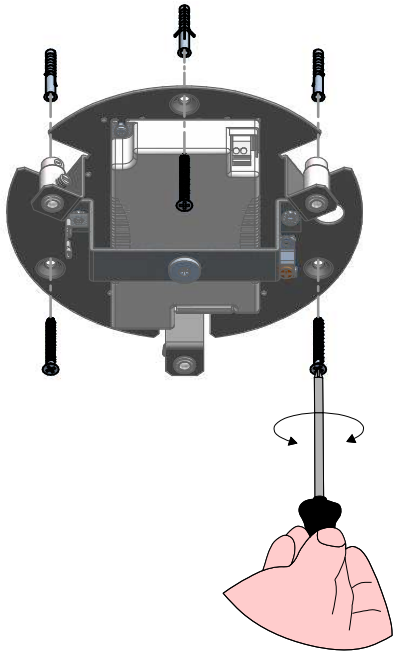

3

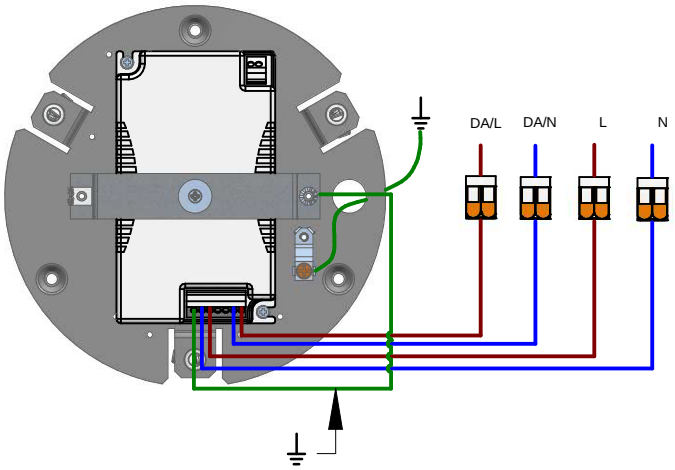

Dali

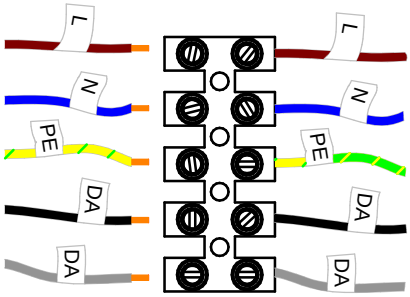

Push-Dim

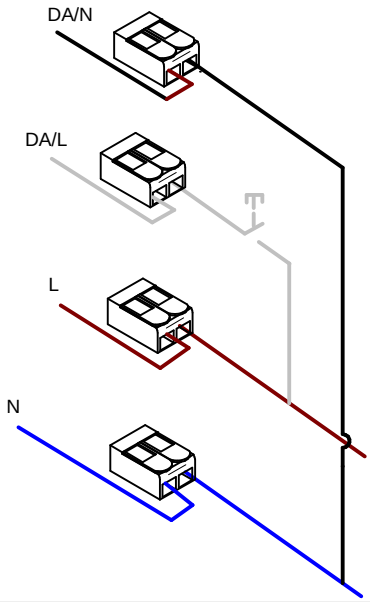

ON/OFF

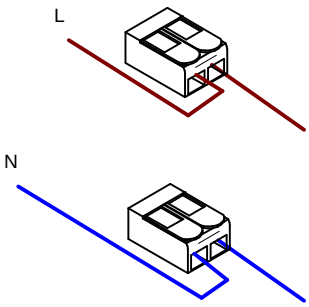

4

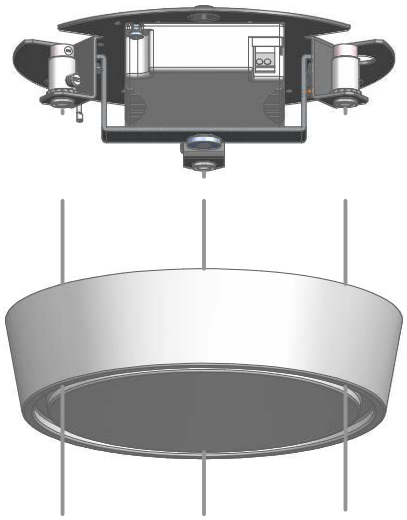

5

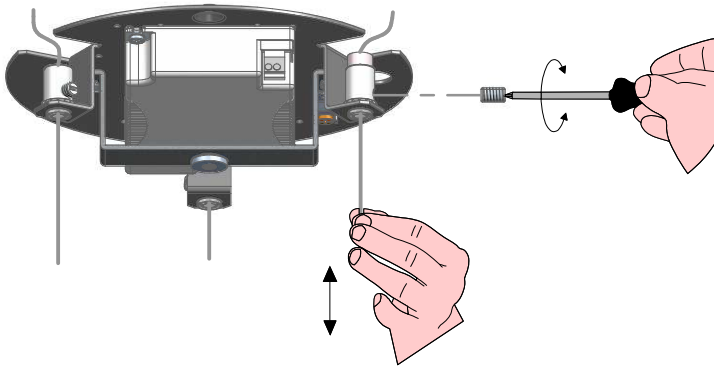

6

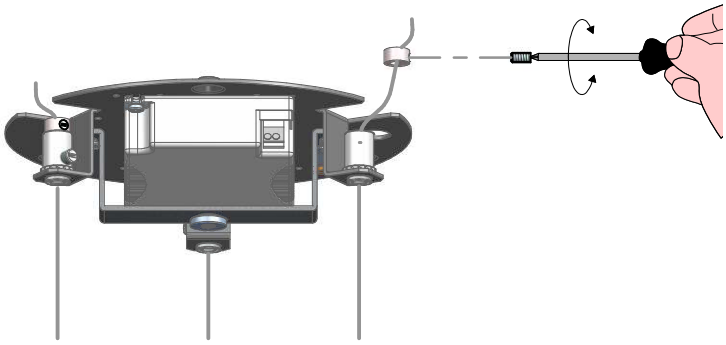

7

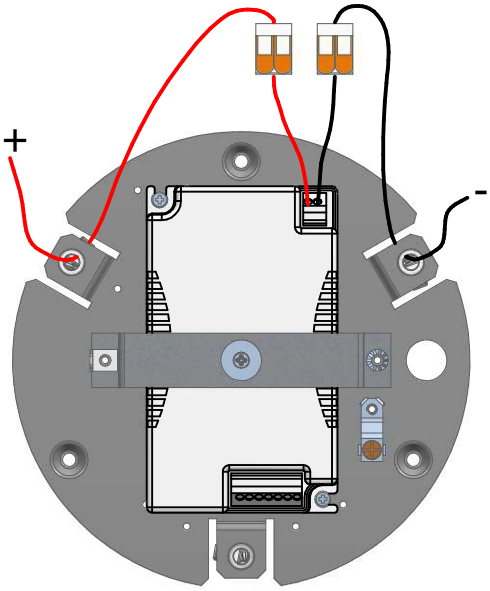

8

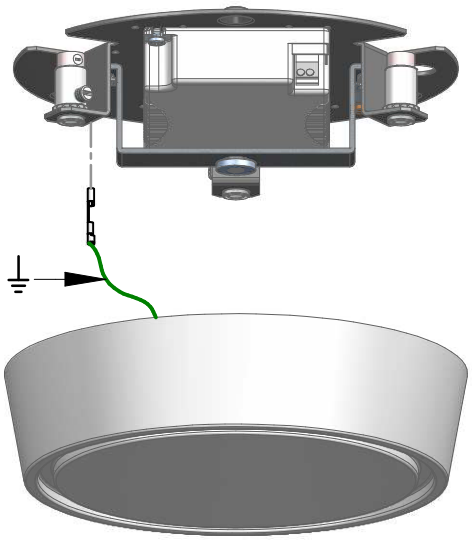

9

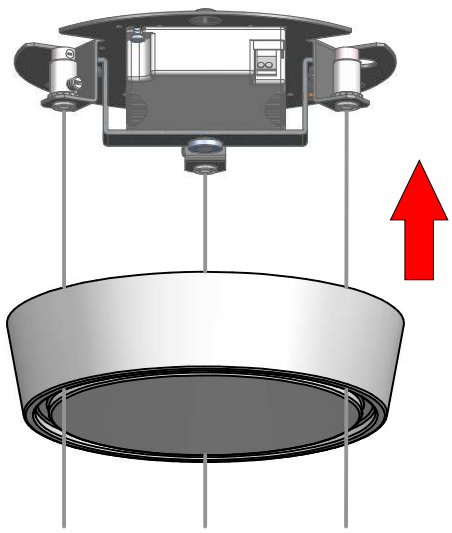

KIT0079 - CASAMBI DALI

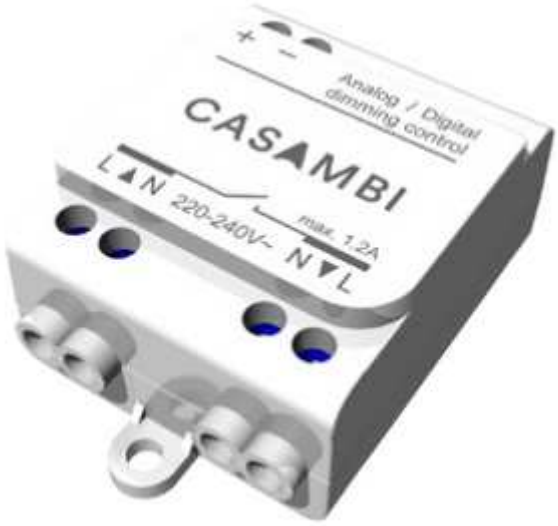

DALI / 1-10V

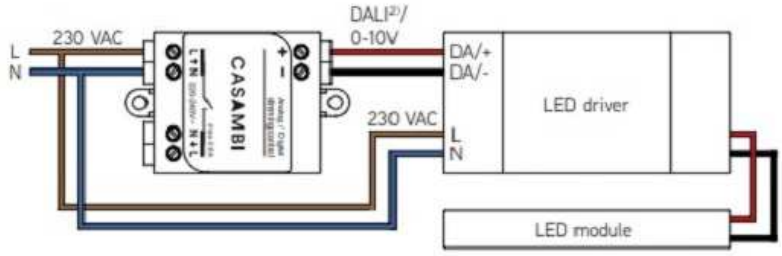



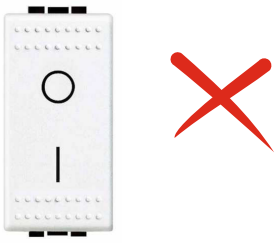

DALI / 1-10V

