8536
REFLEXIO
rev: 3

linea light

STILNOVO

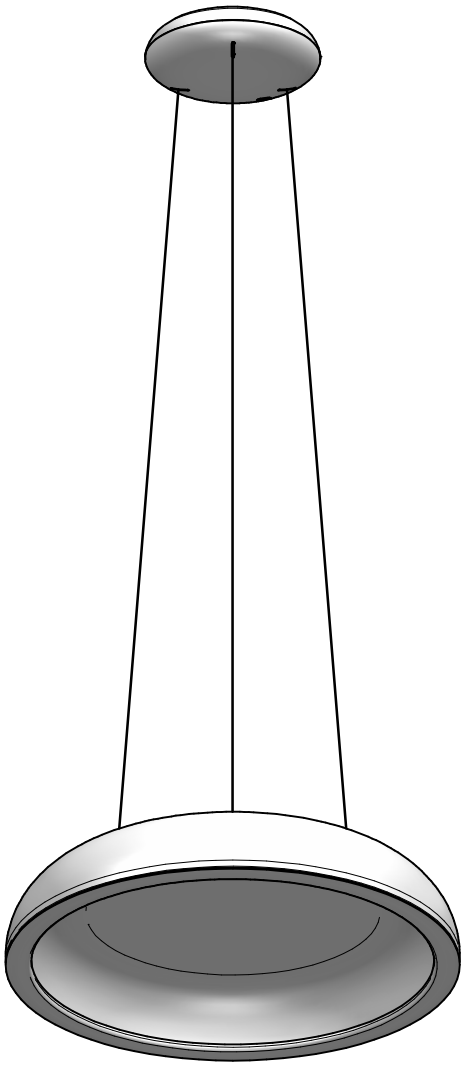

☐ 8536

☐ 8536M

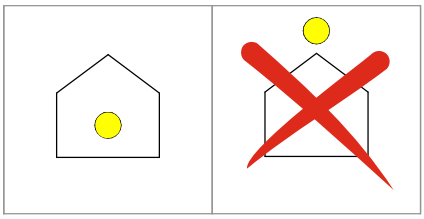

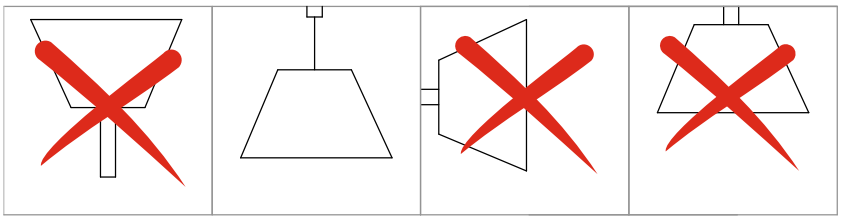

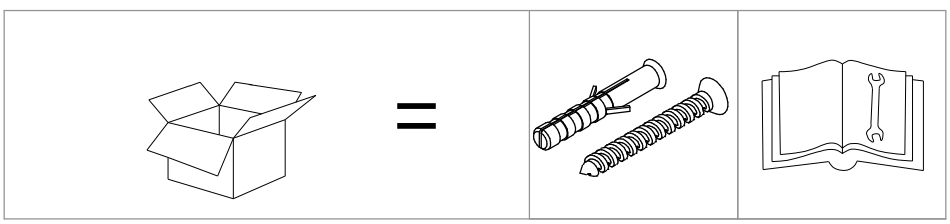

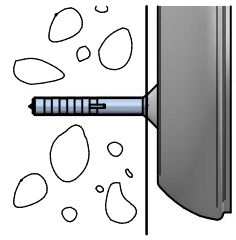

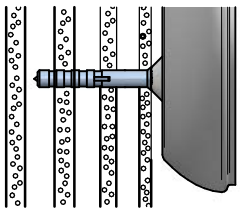

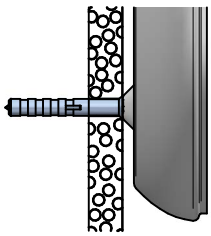

1

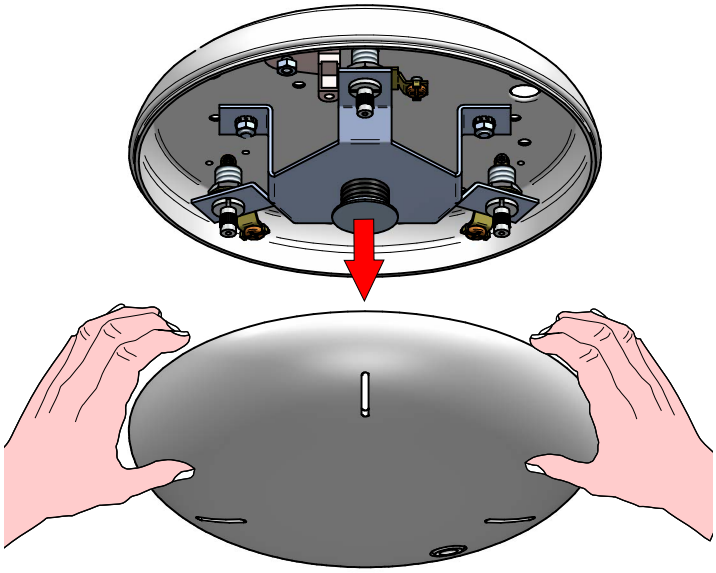

2

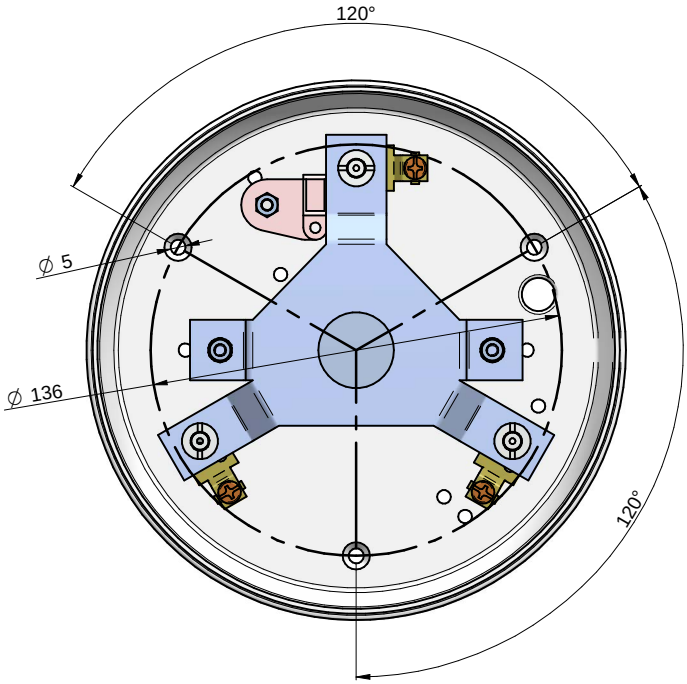

3

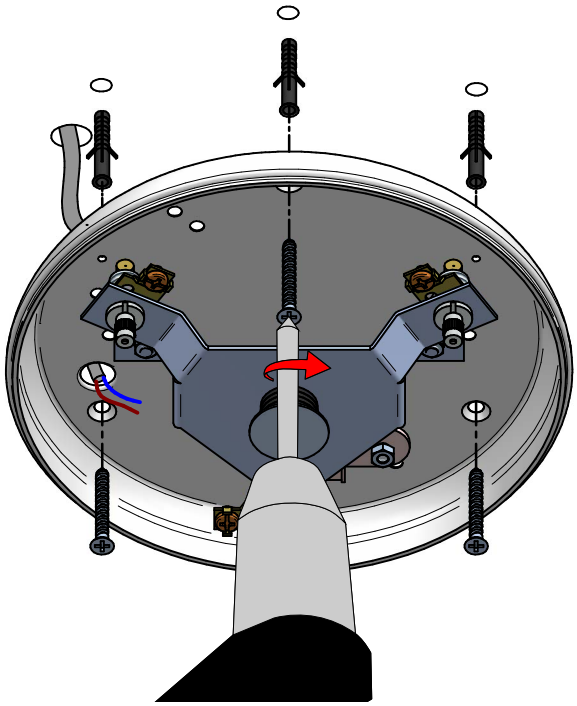

4

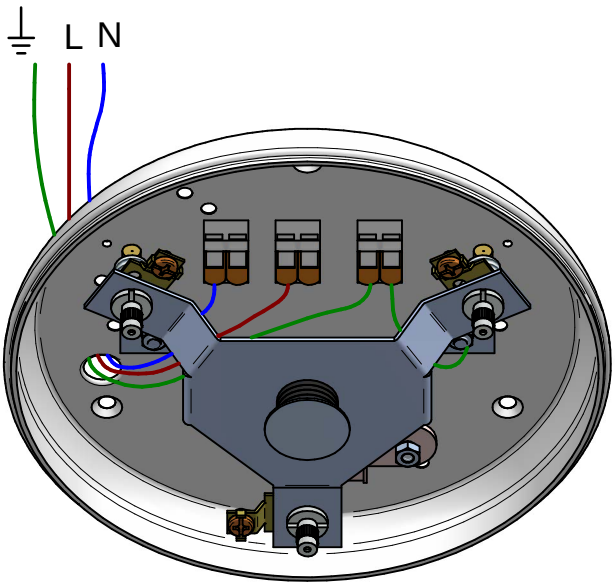

Phase-Cut
KIT0026

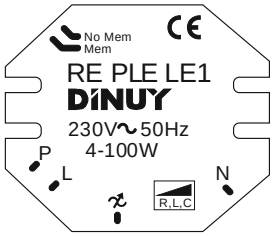

5

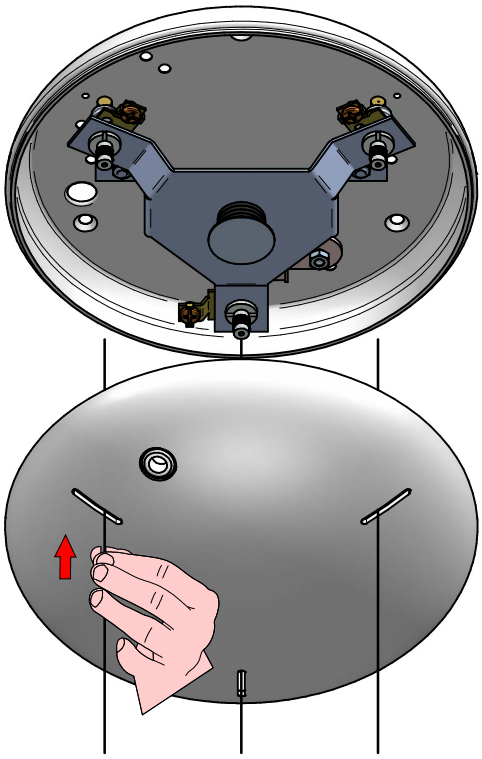

6

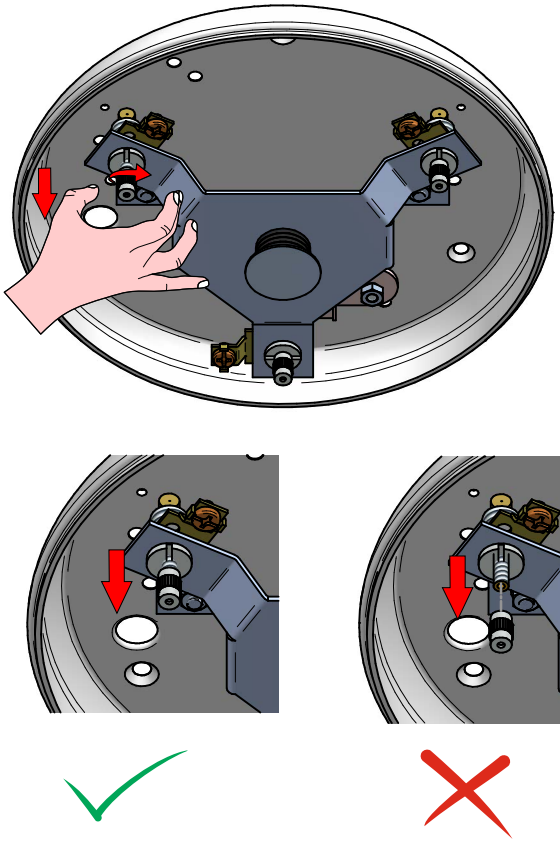

7

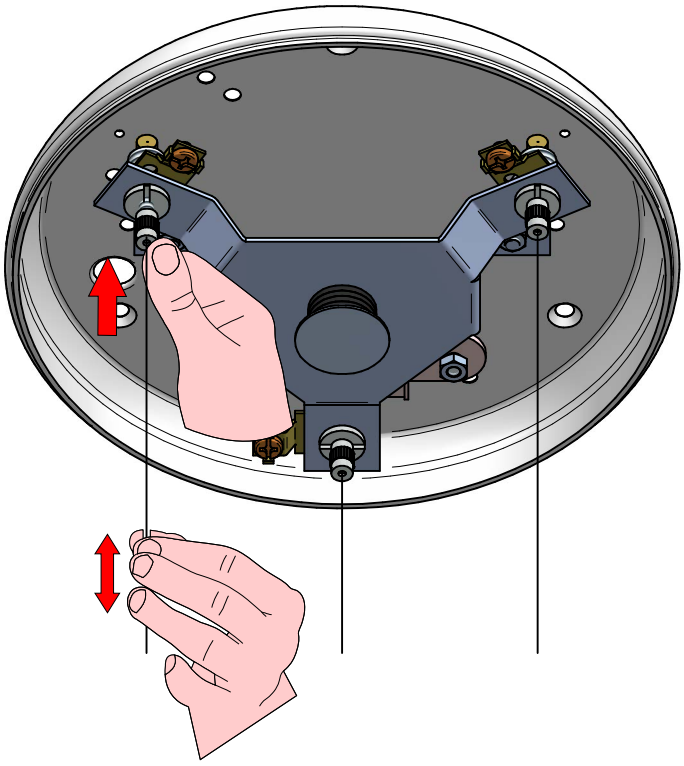

8

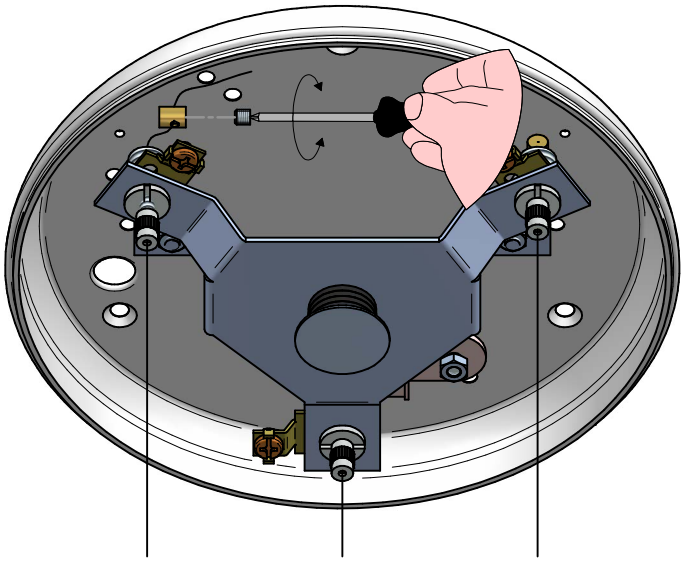

9

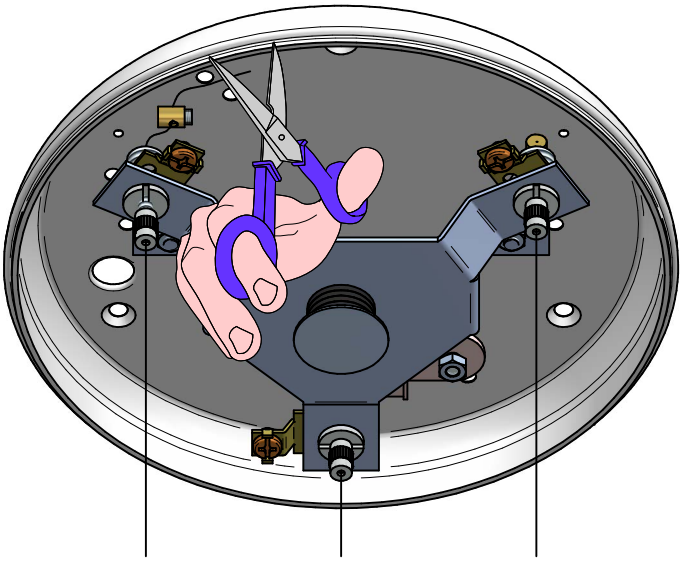

10

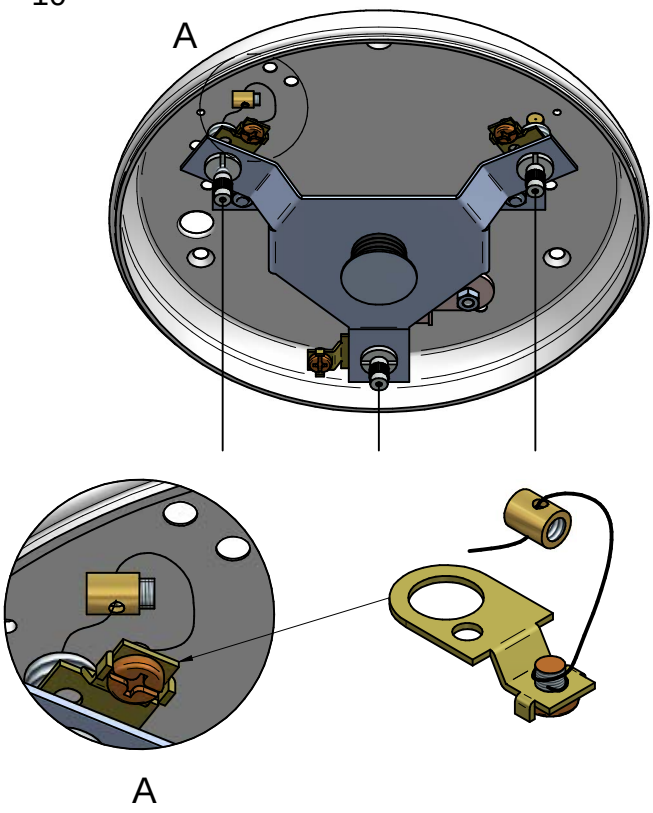

11

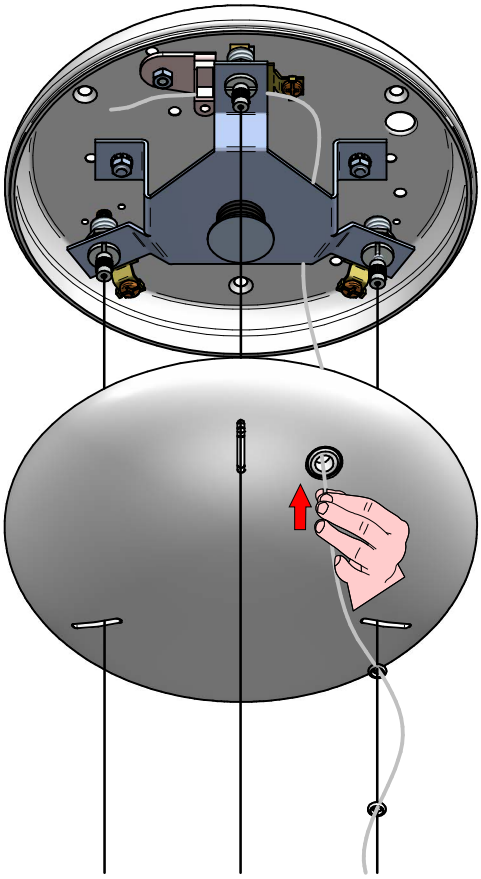

12

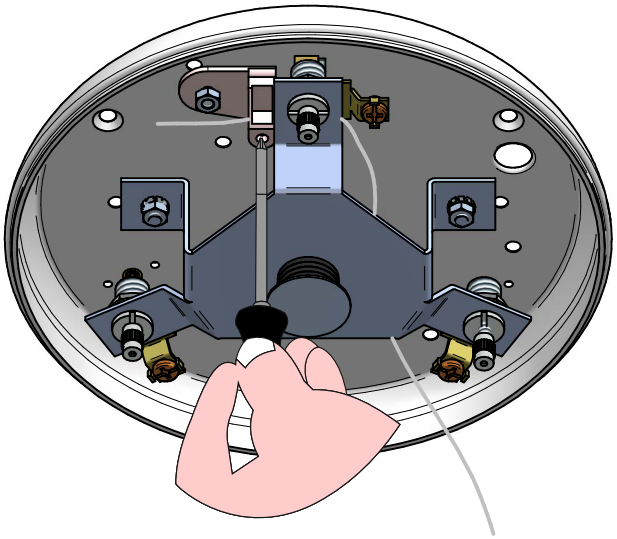

13

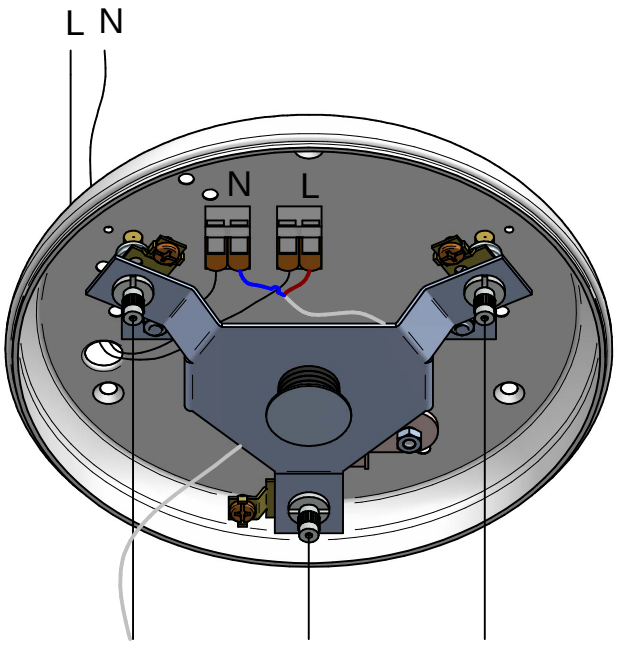

14

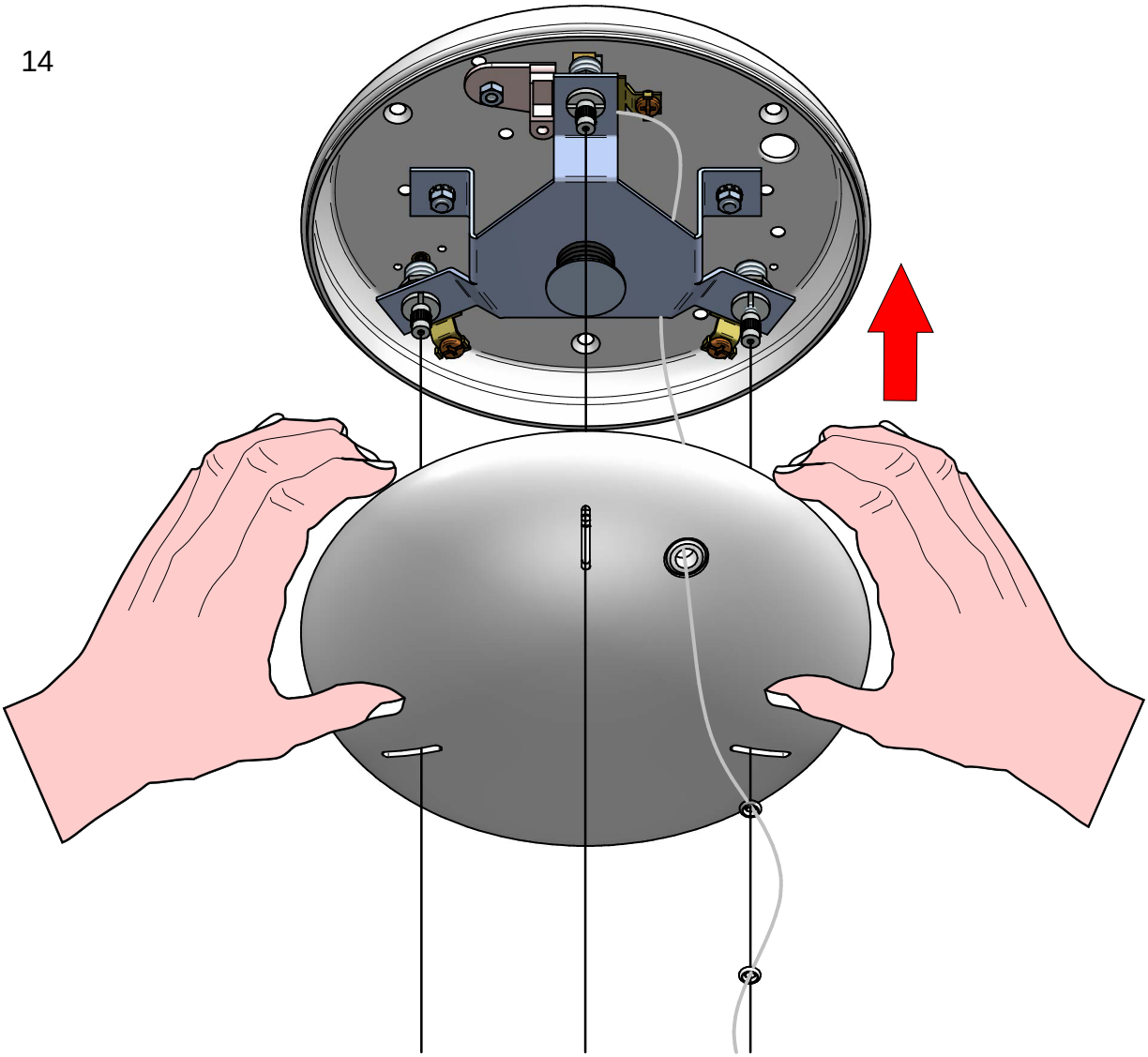

KIT0080 - CASAMBI

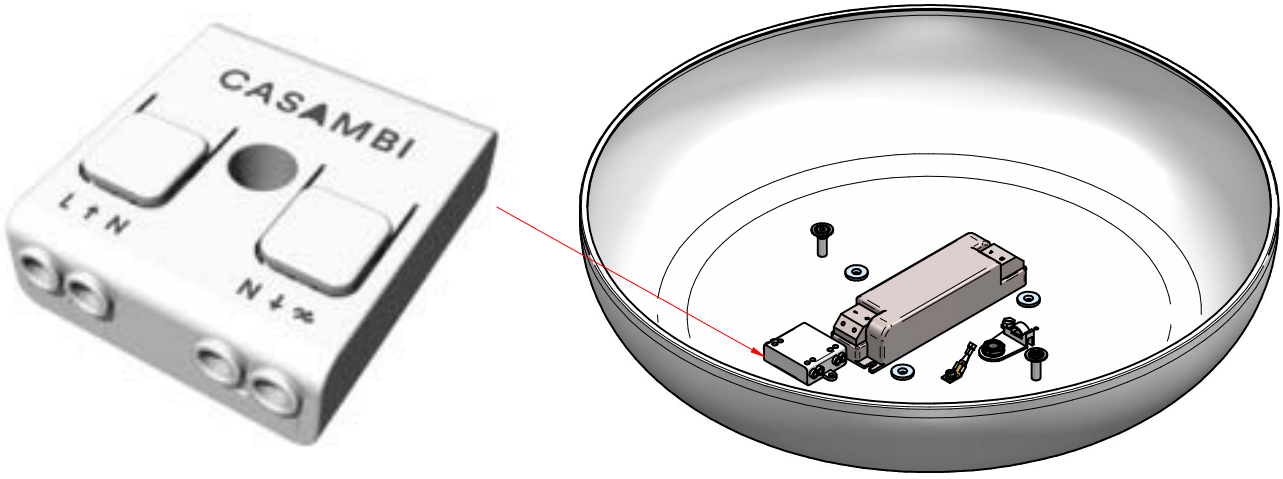

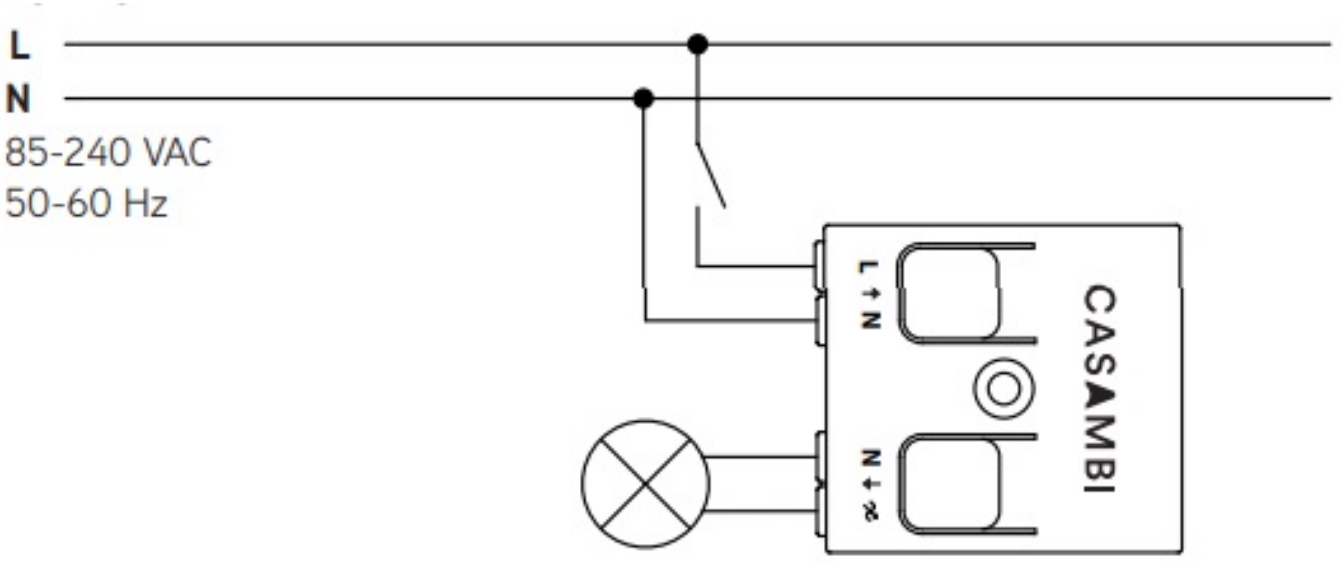

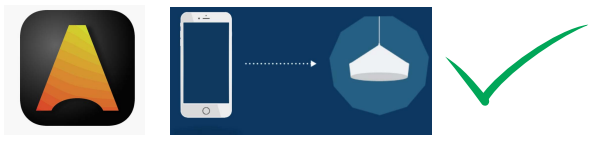

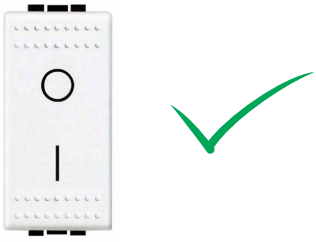

8537
REFLEXIO
rev: 3

STILNOVO

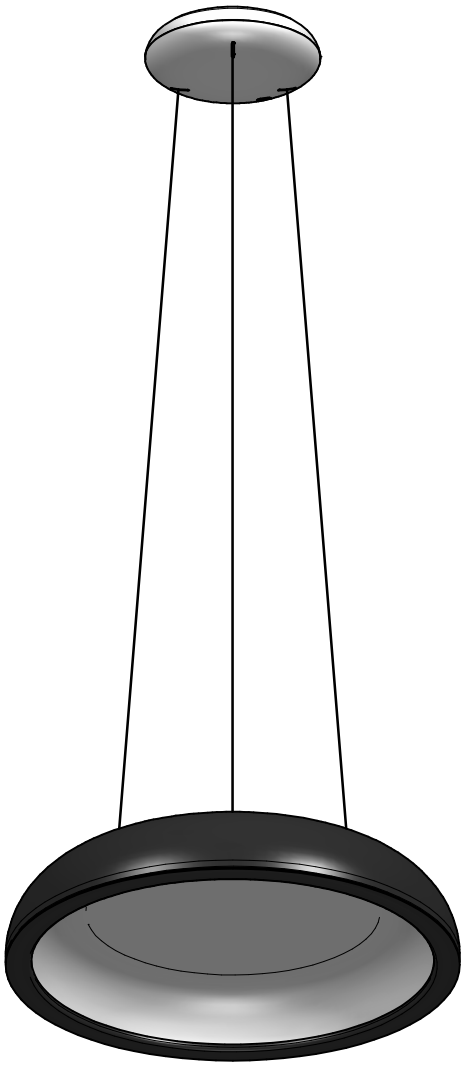

8537

8537M

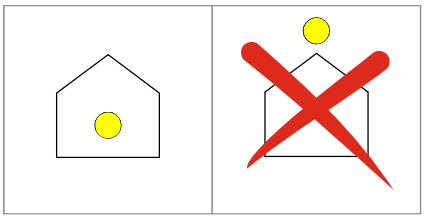

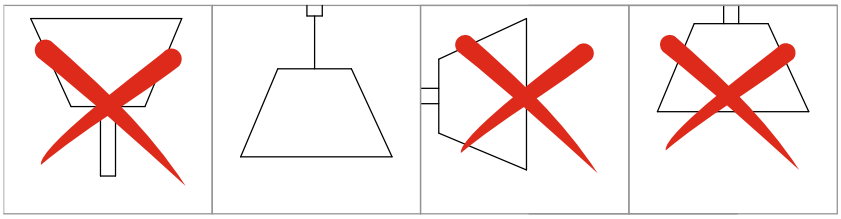

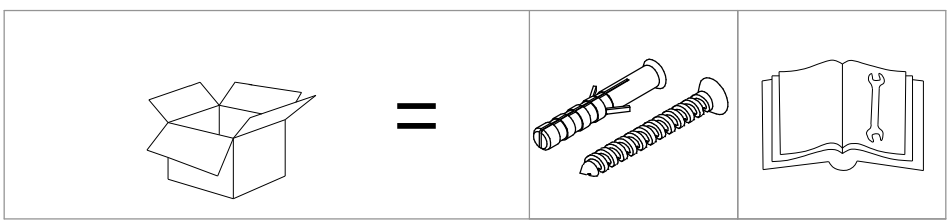

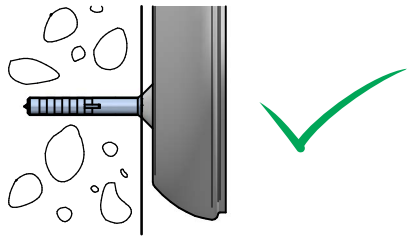

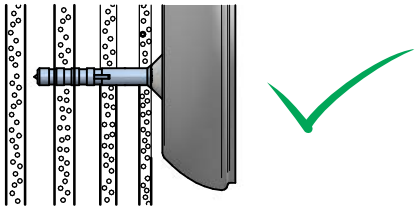

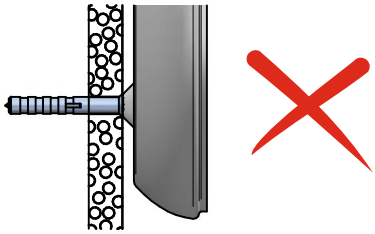

1

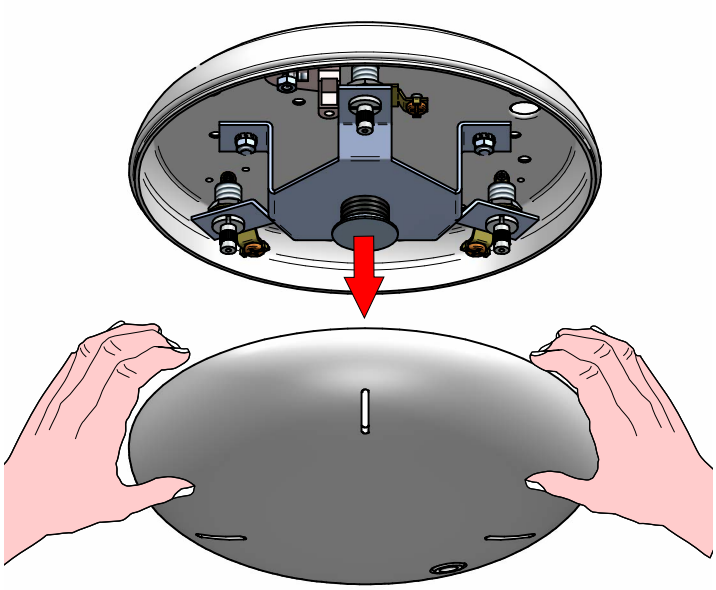

2

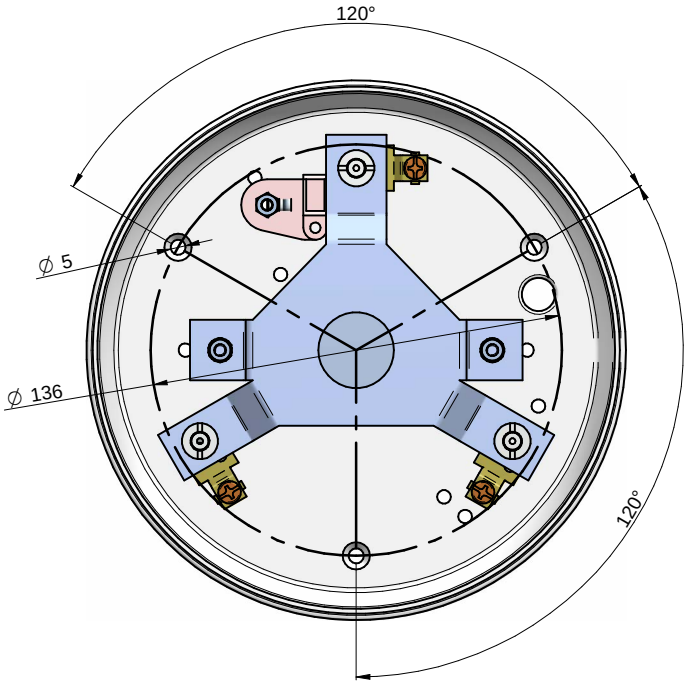

3

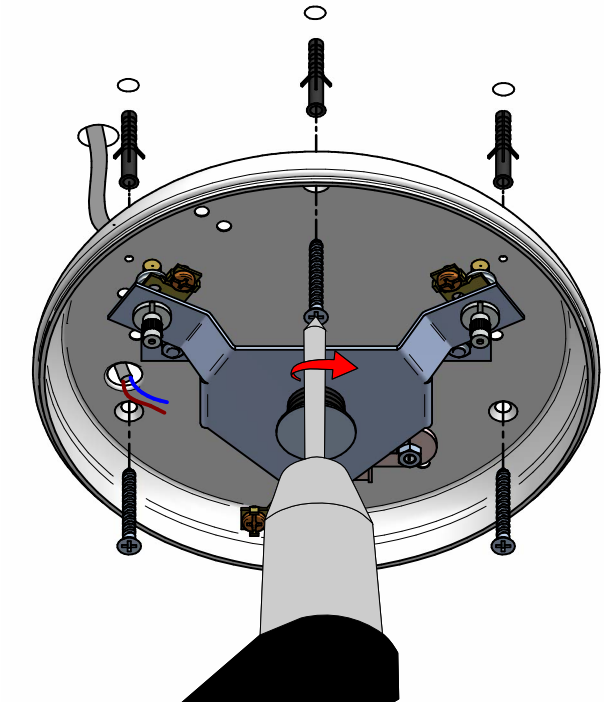

4

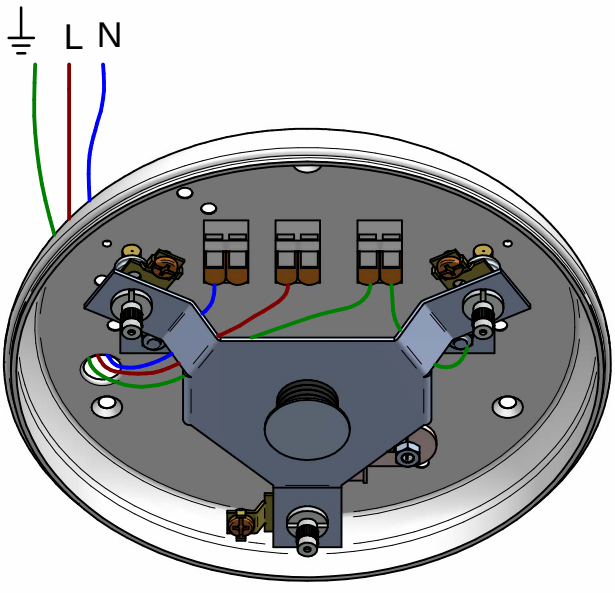

Phase-Cut
KIT0026

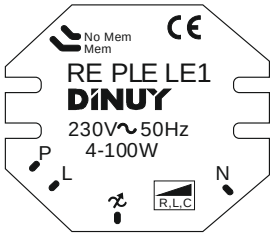

5

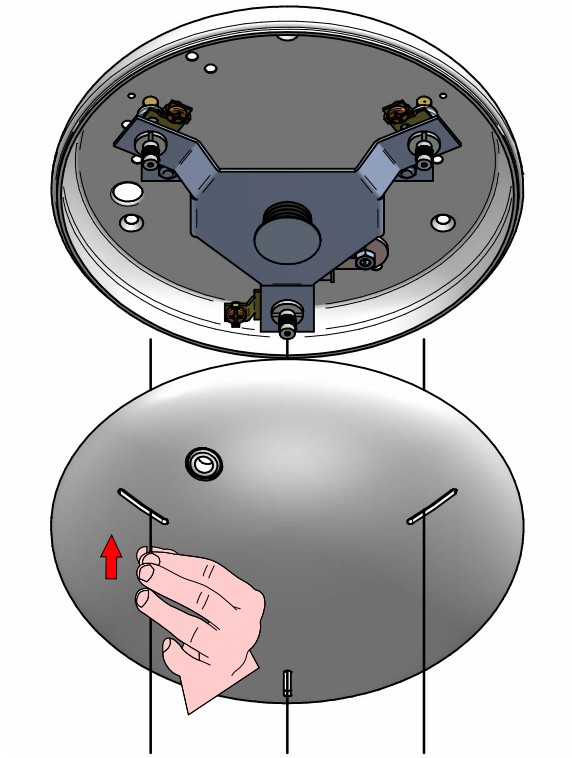

6

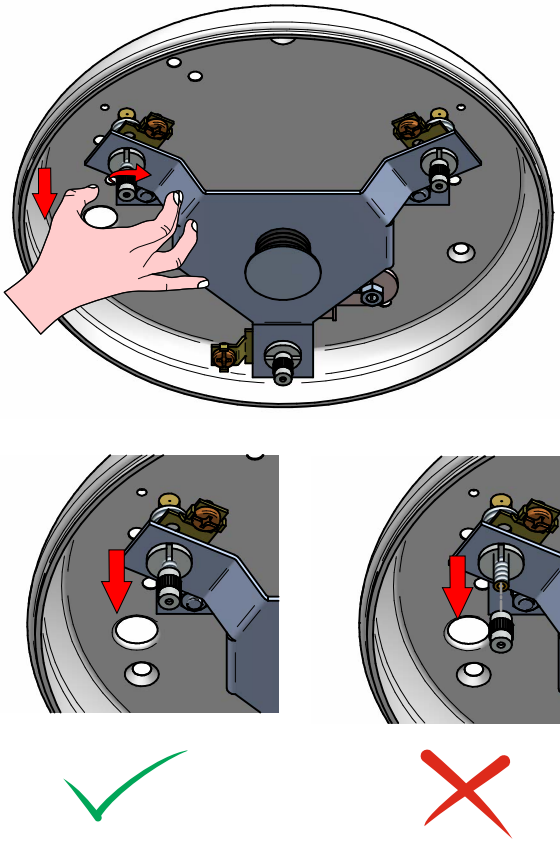

7

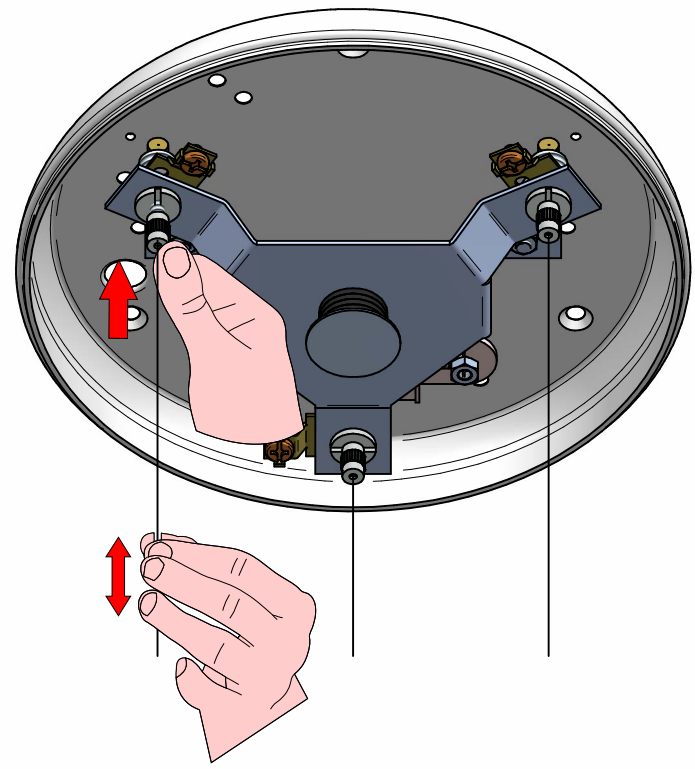

8

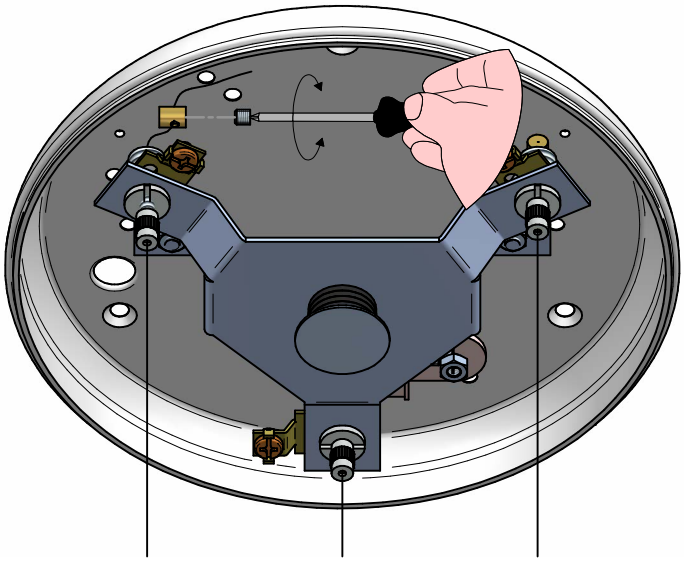

9

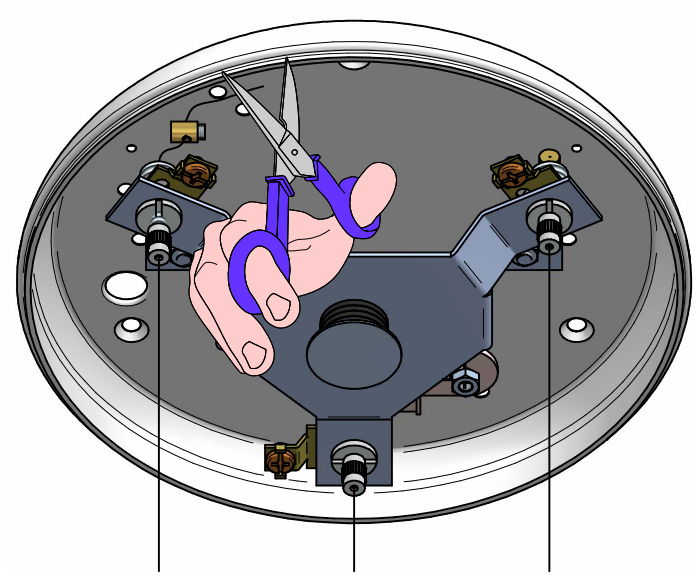

10

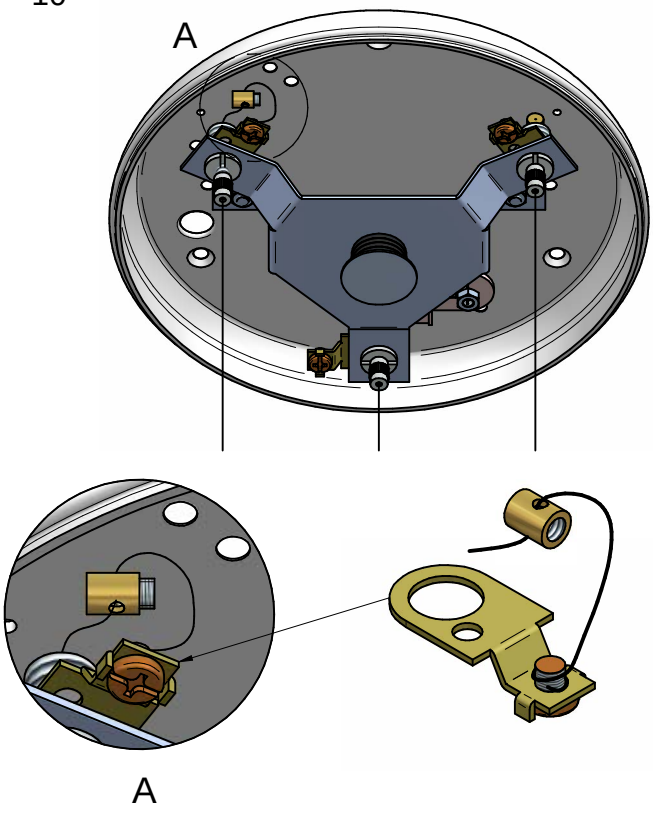

11

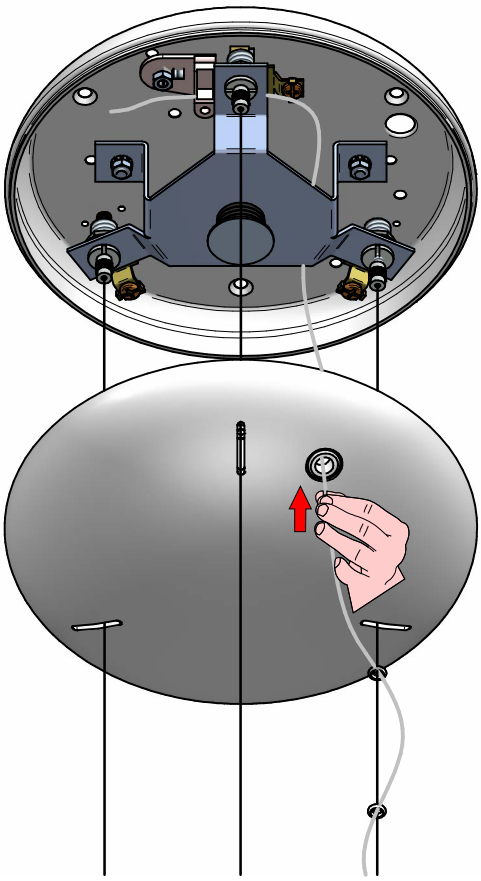

12

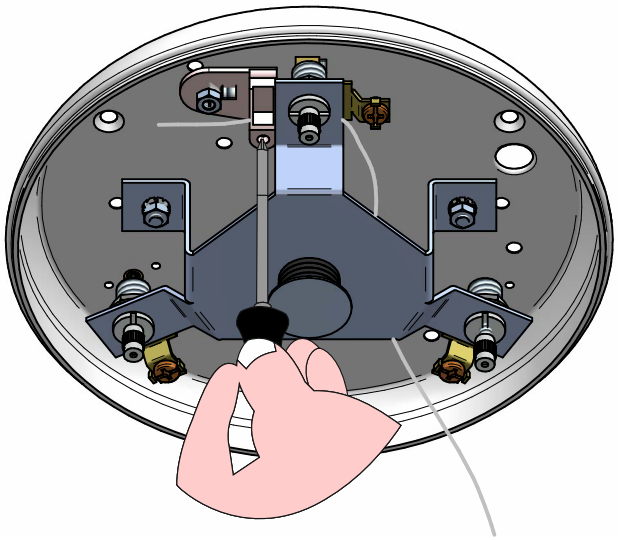

13

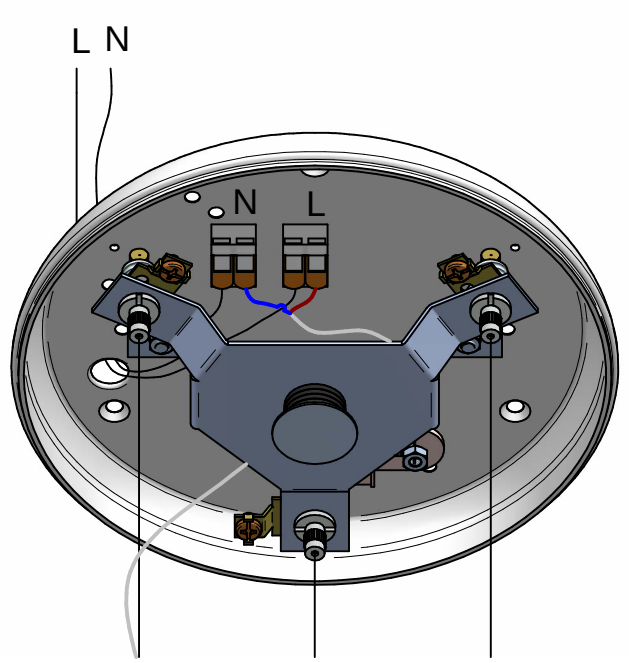

14

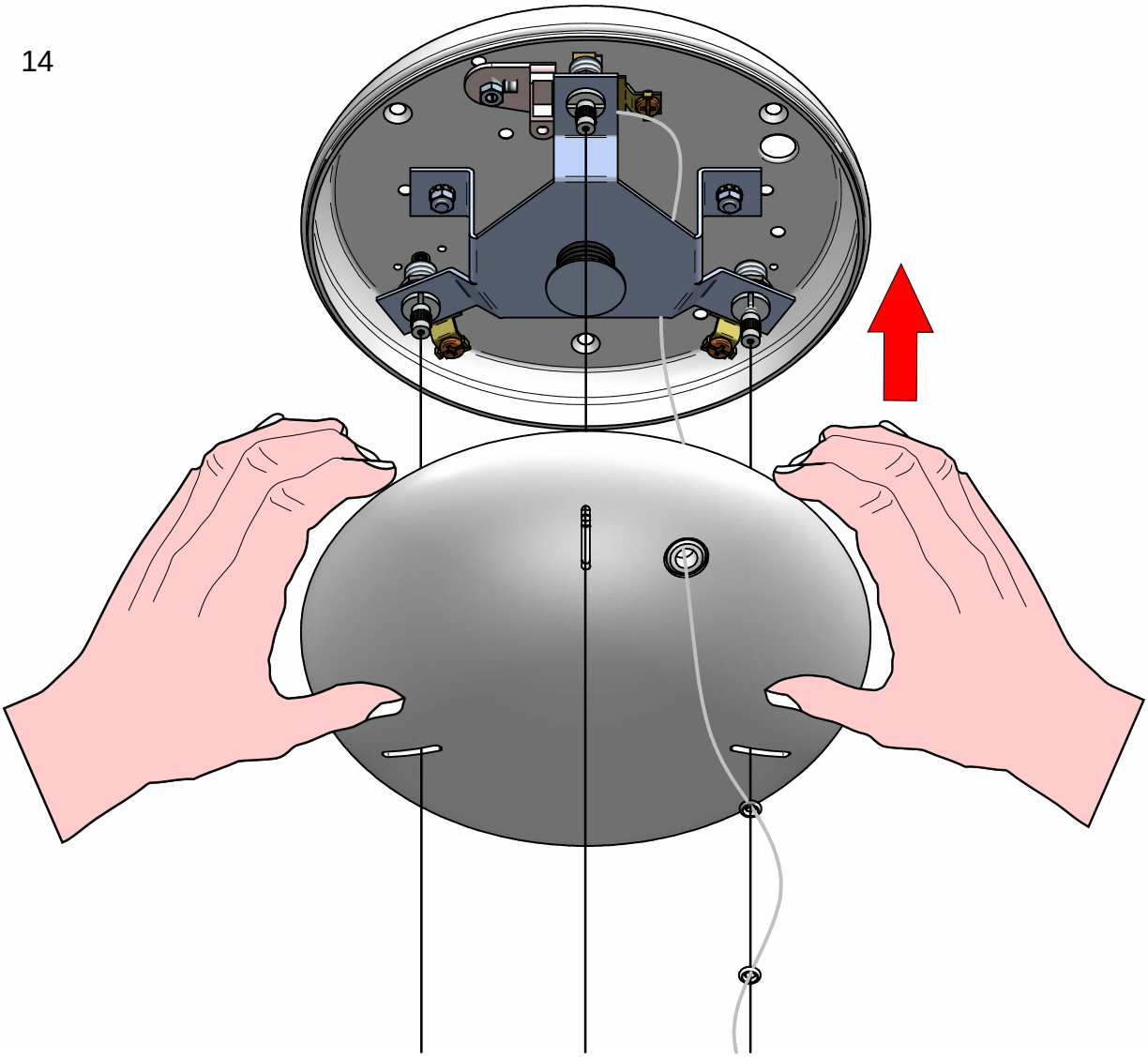

KIT0080 - CASAMBI

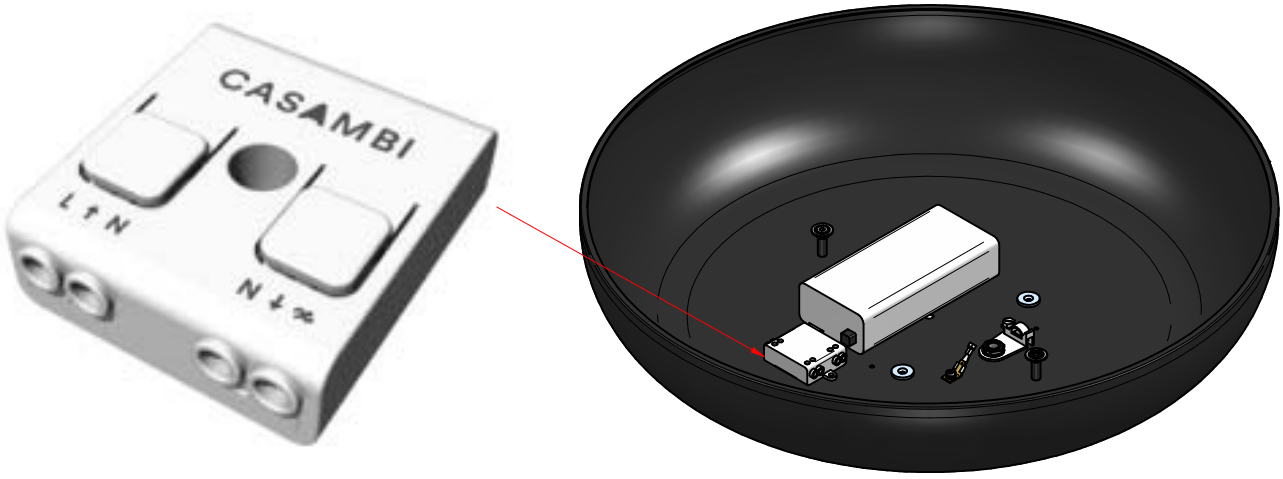

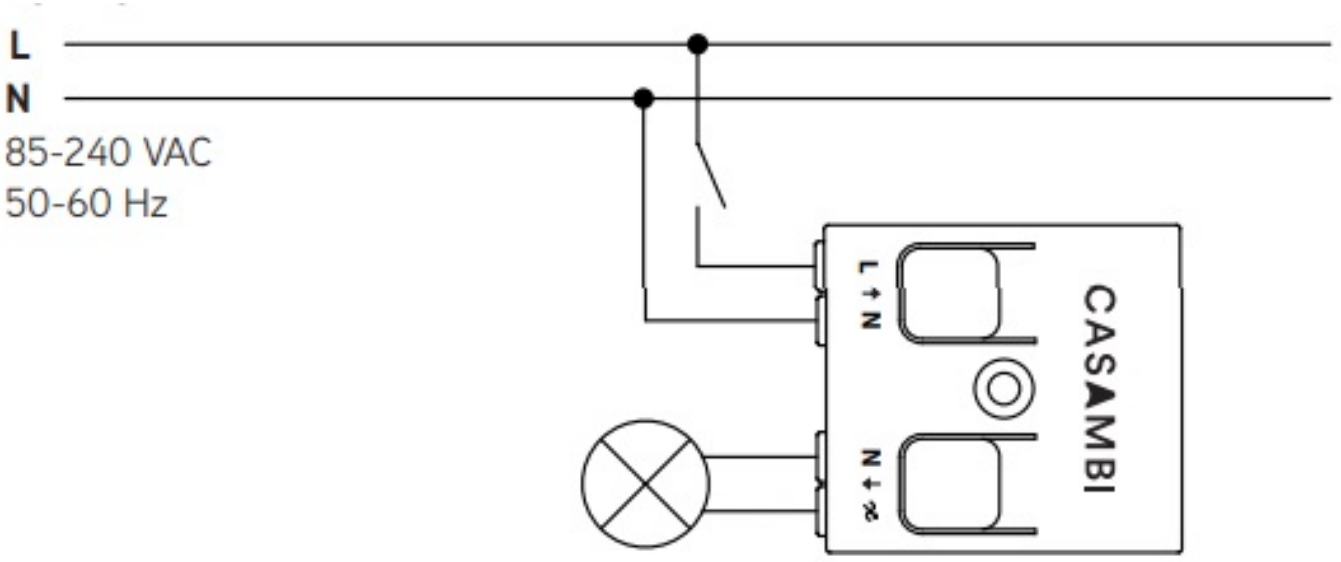



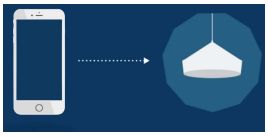



8538
REFLEXIO
rev: 00

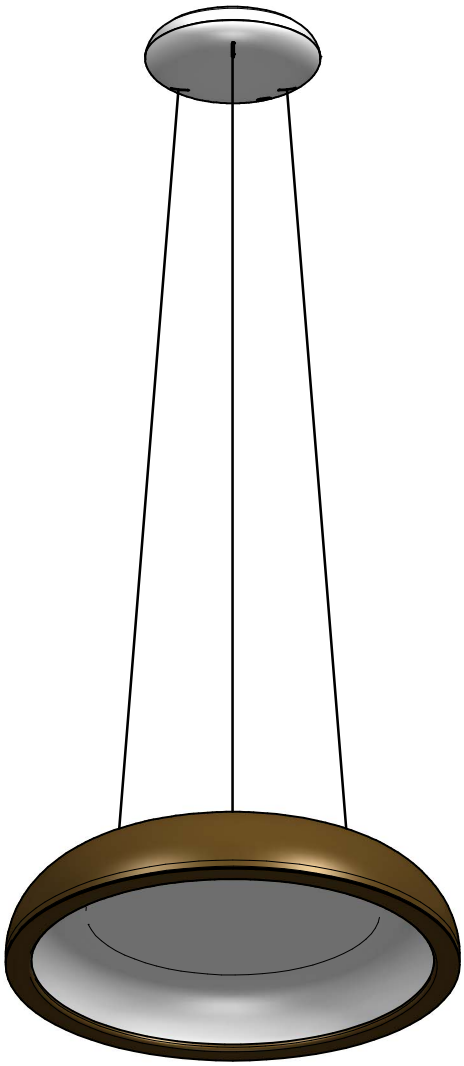

8538

8538M

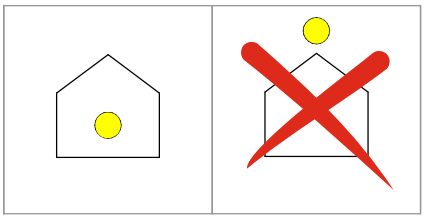

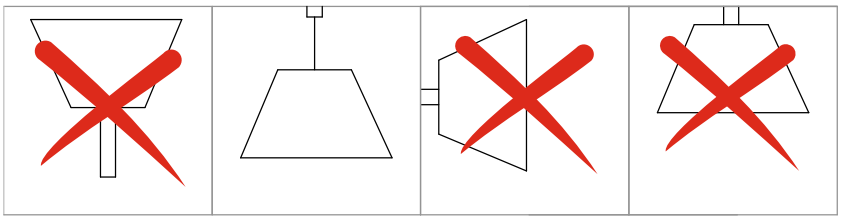

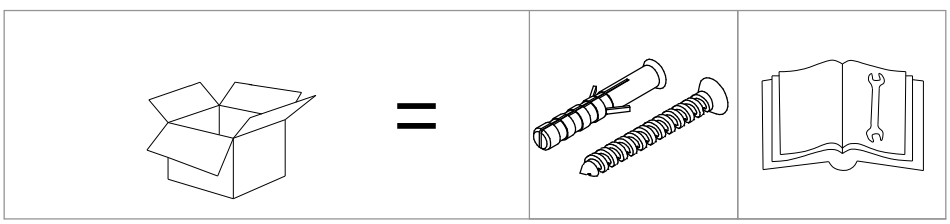

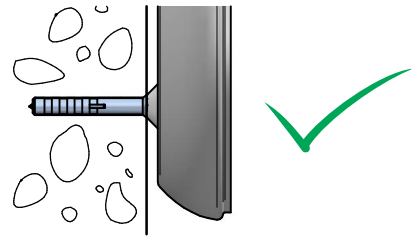

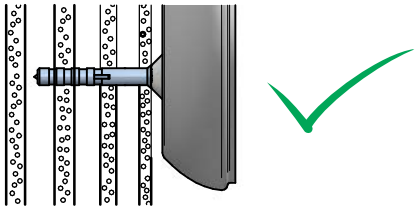

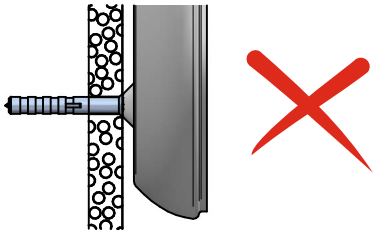

1

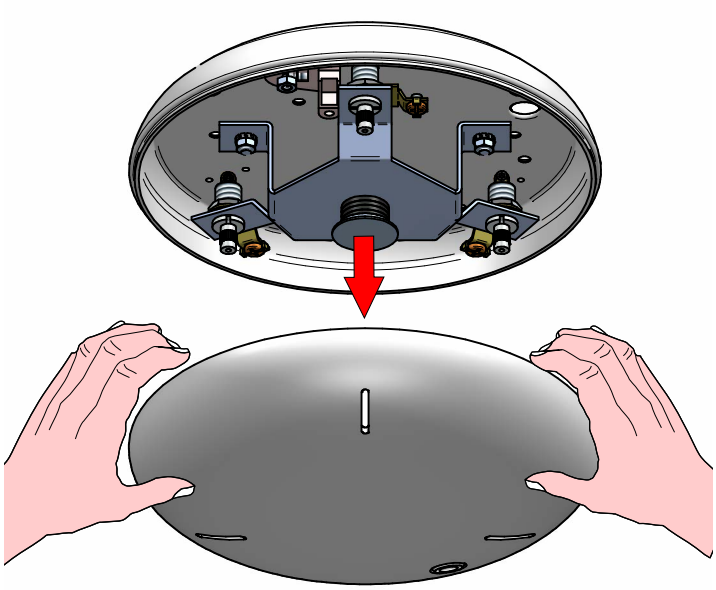

2

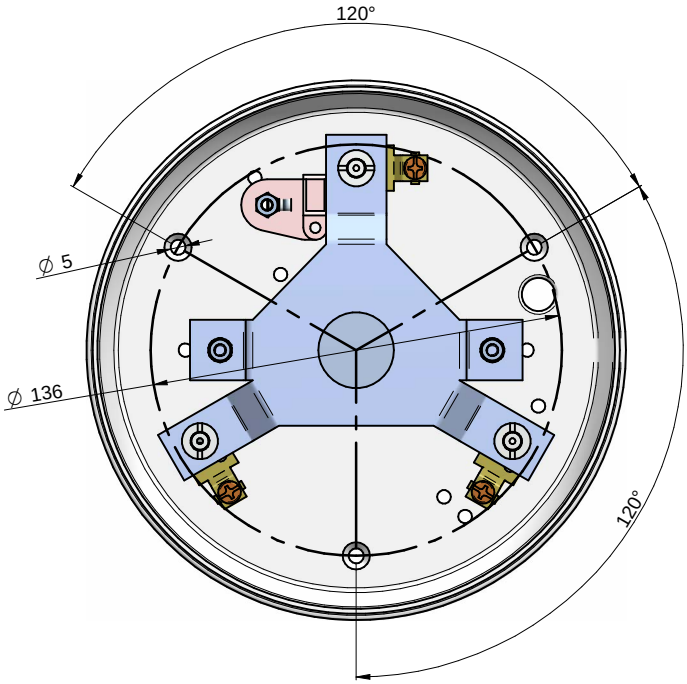

3

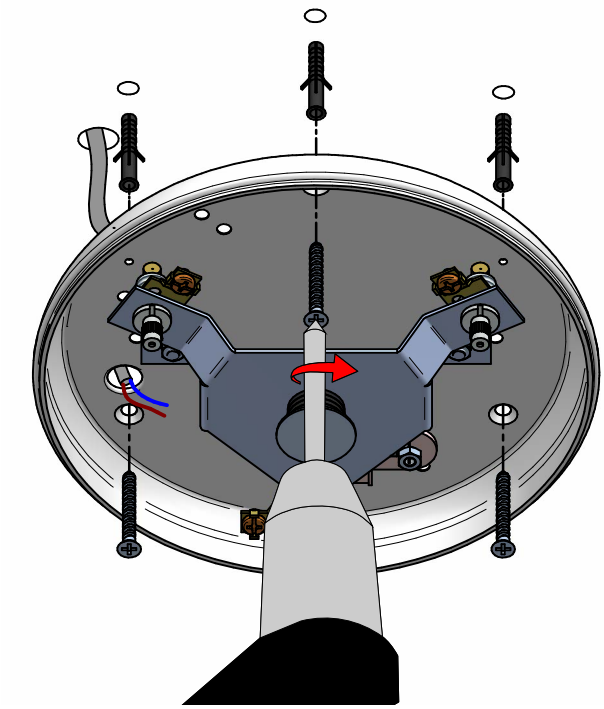

4

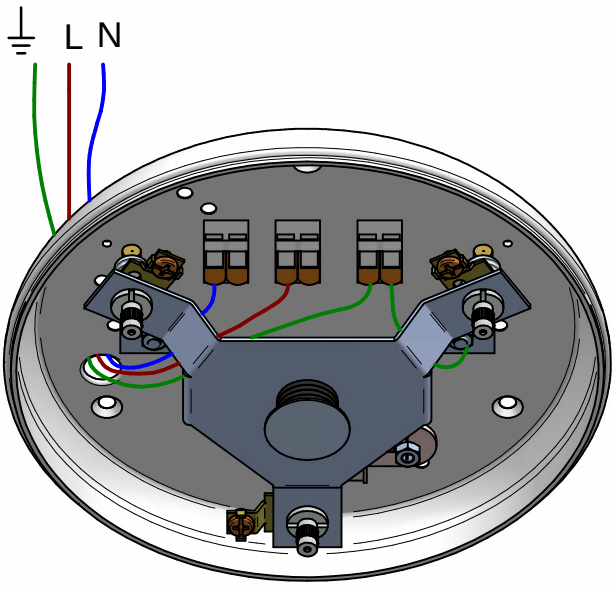

Phase-Cut
KIT0026

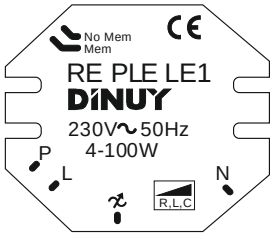

5

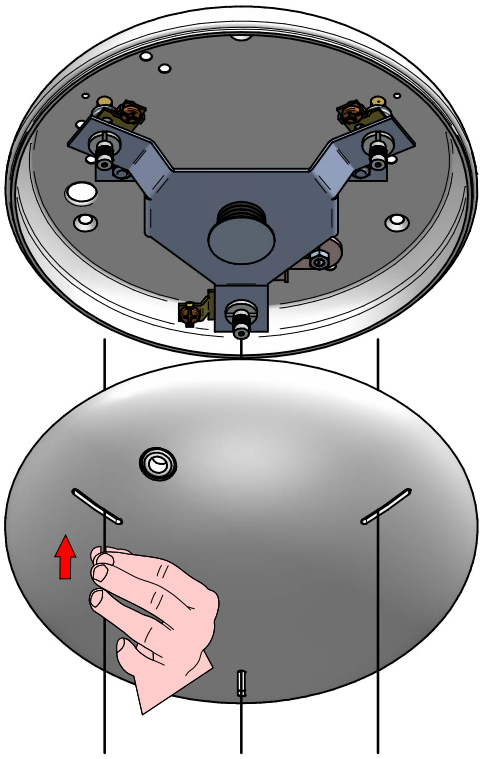

6

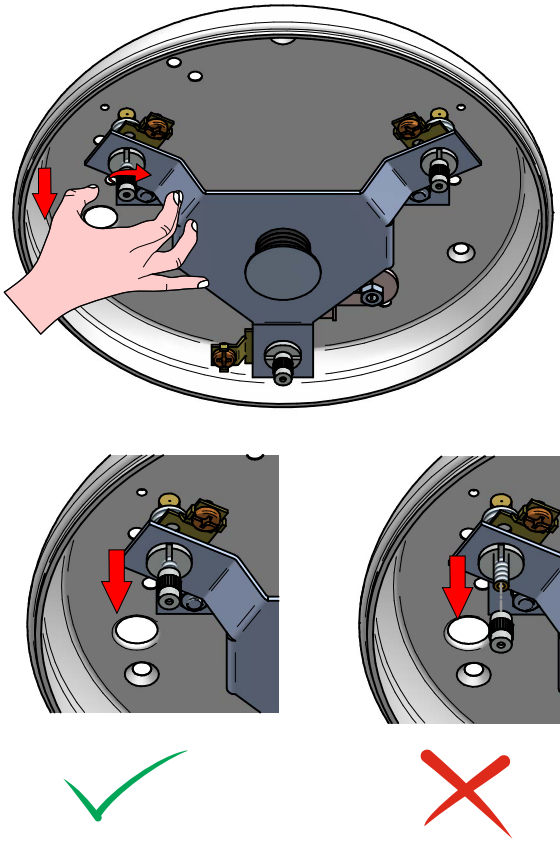

7

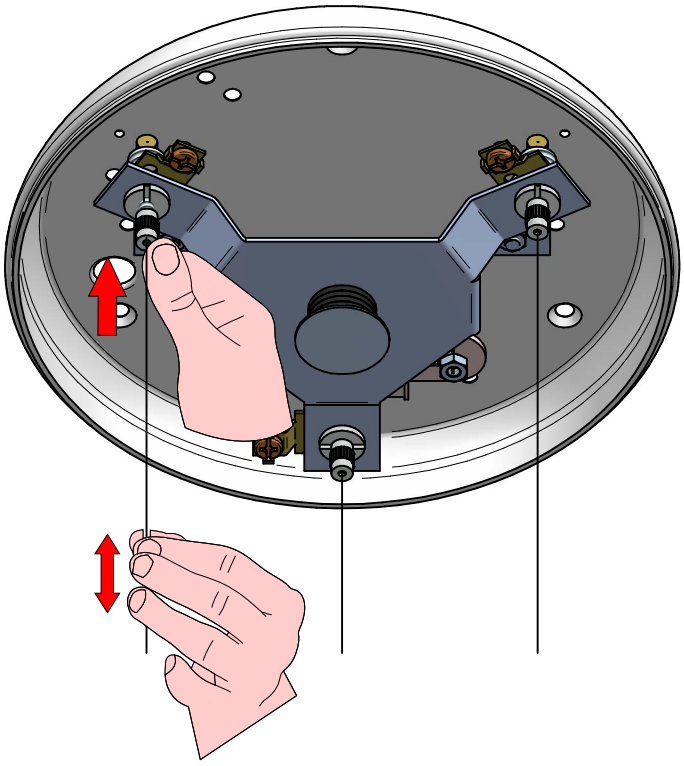

8

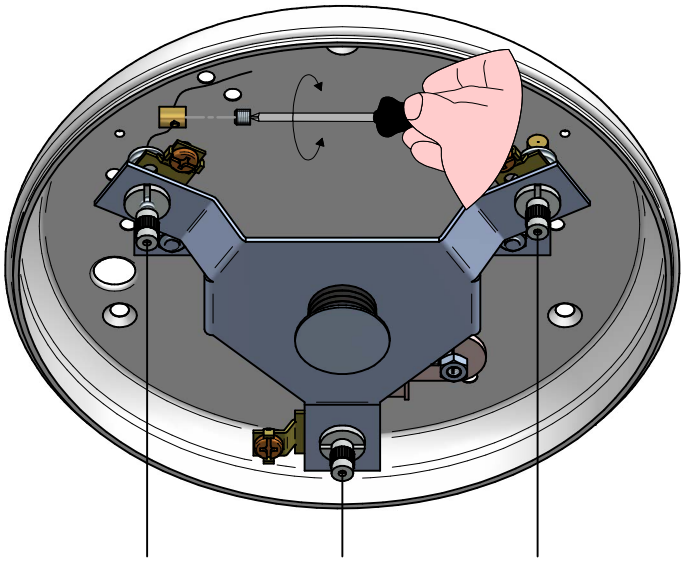

9

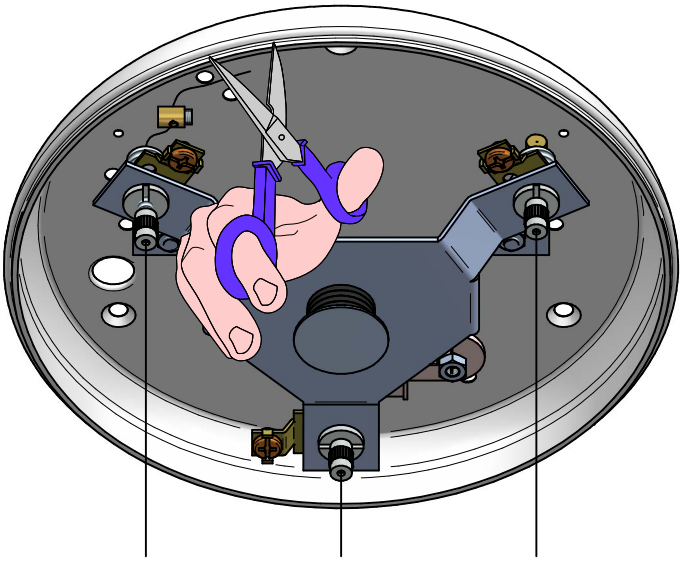

10

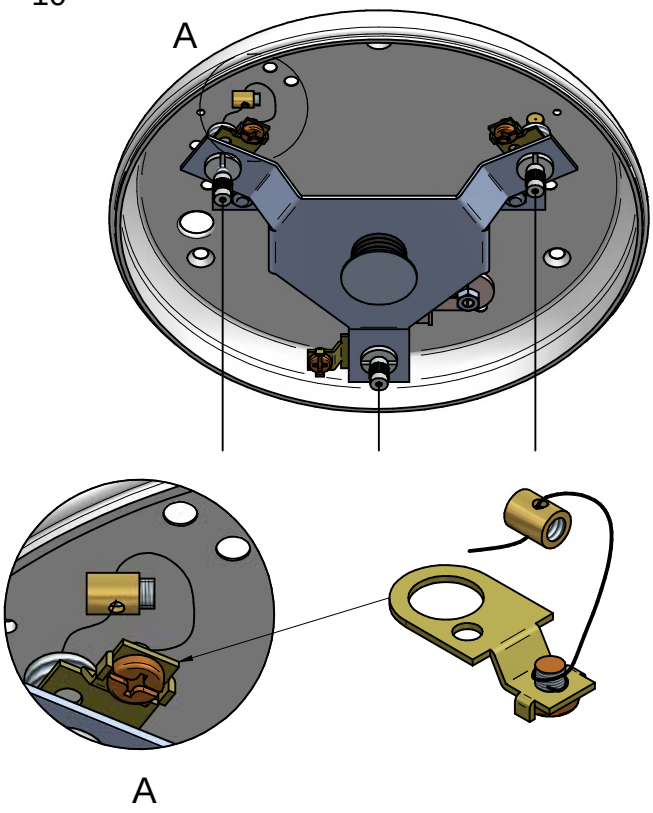

11

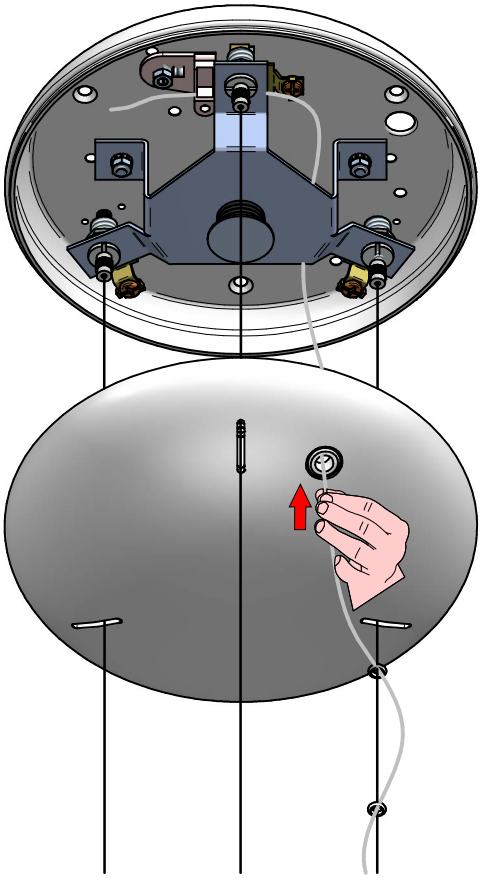

12

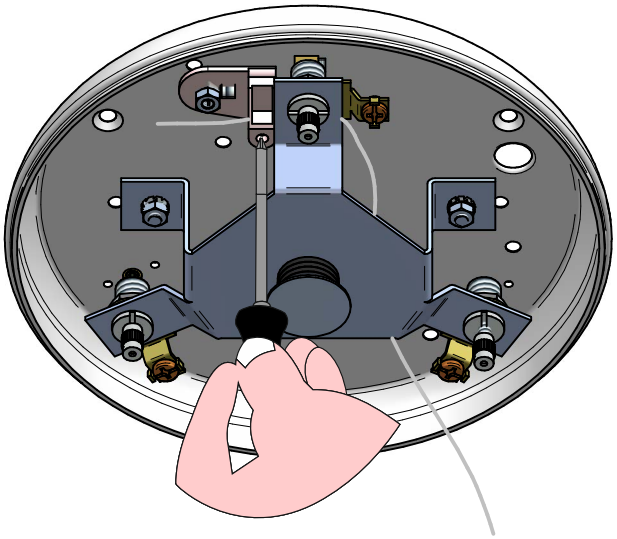

13

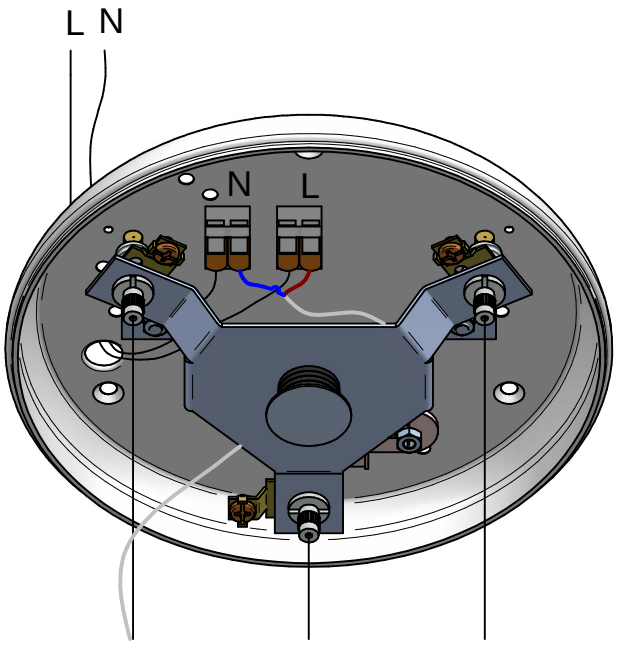

14

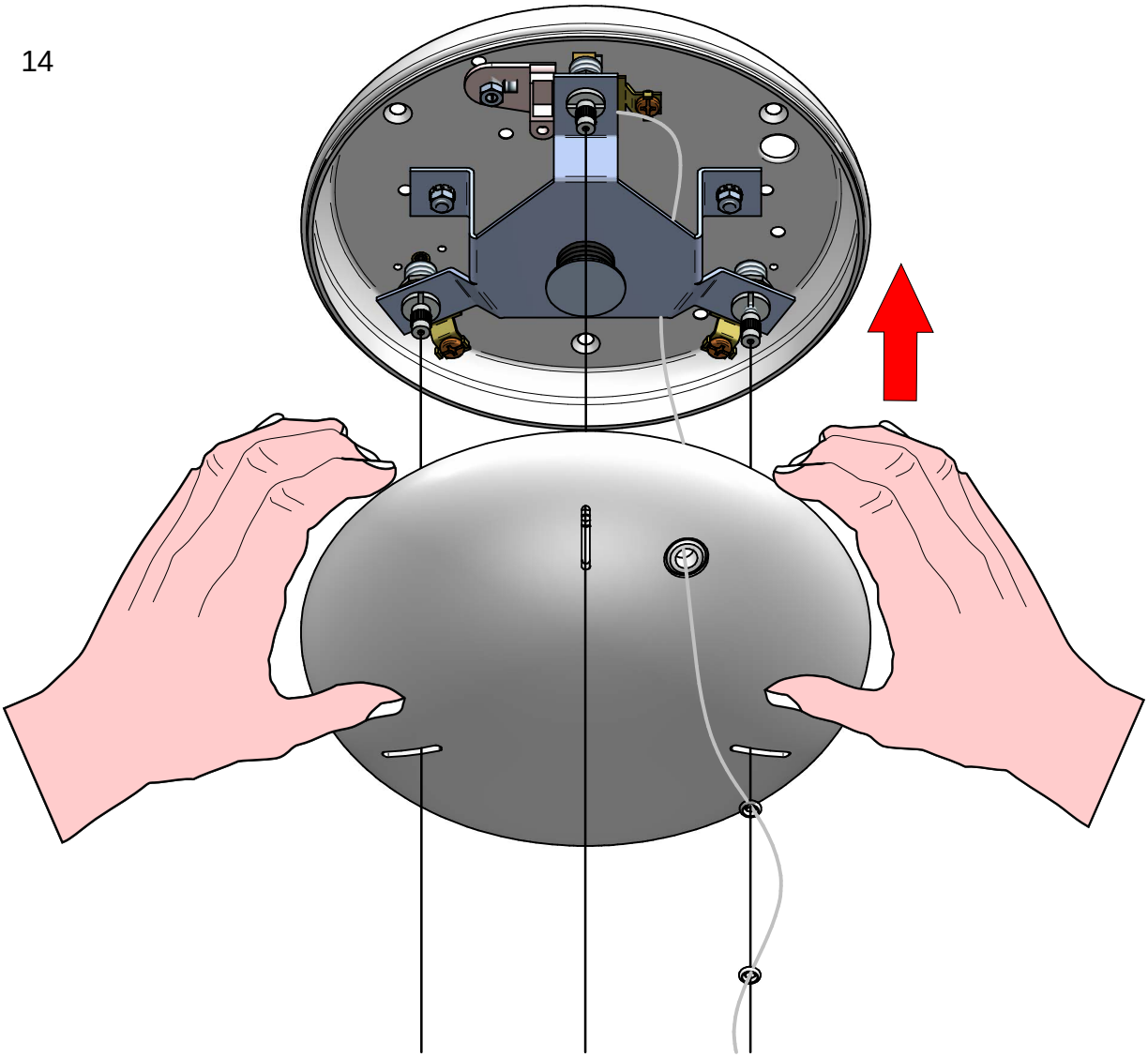

KIT0080 - CASAMBI

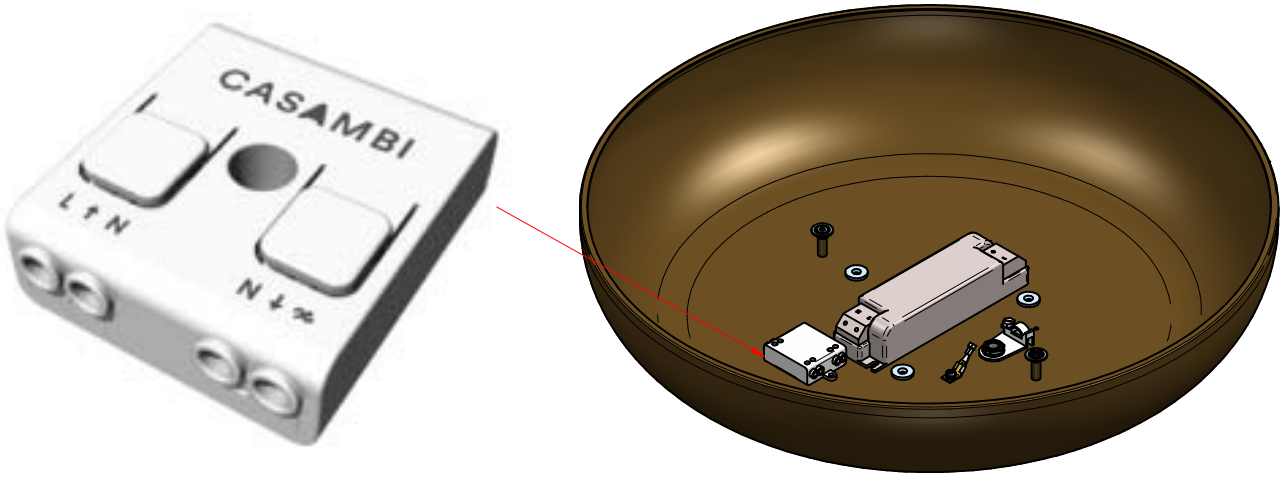

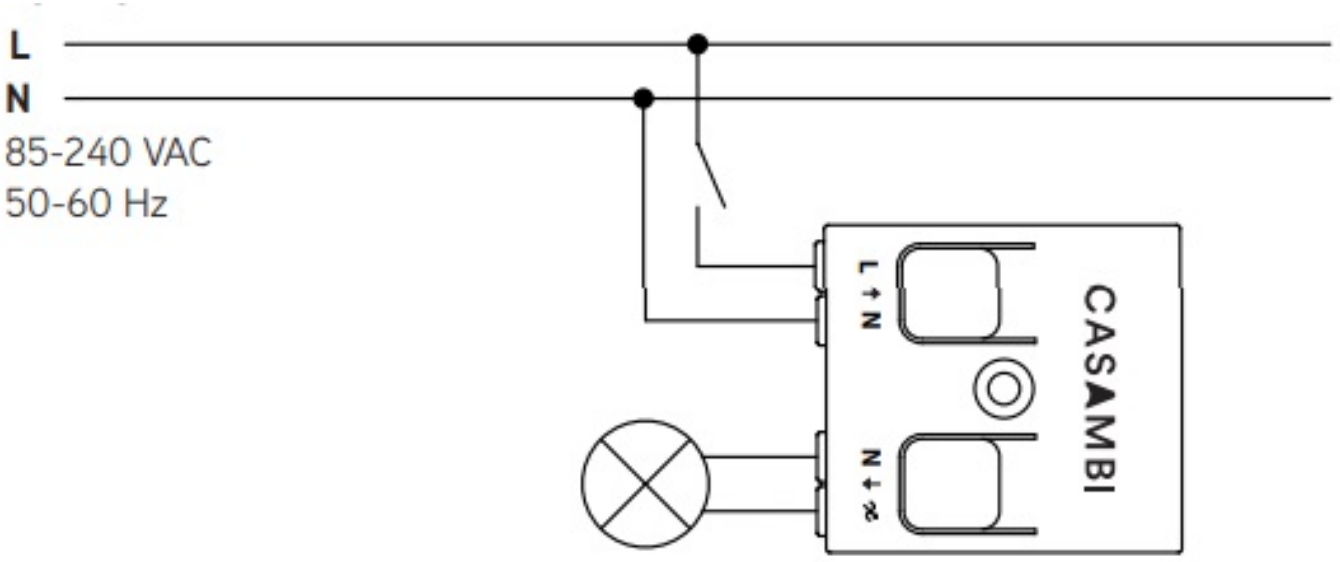

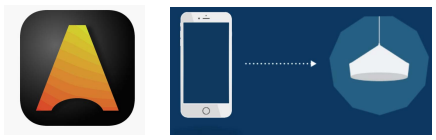



8539
REFLEXIO
rev: 3

linea light

STILNOVO

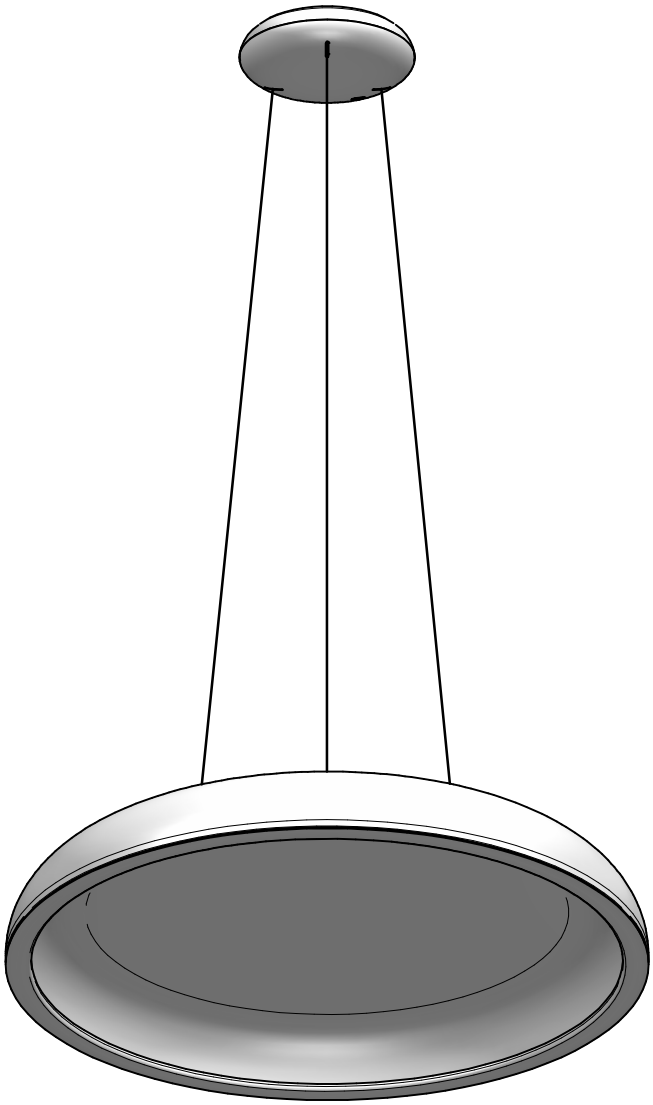

☐ 8539

☐ 8539M

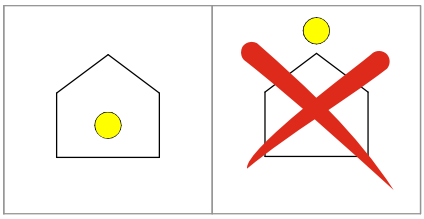

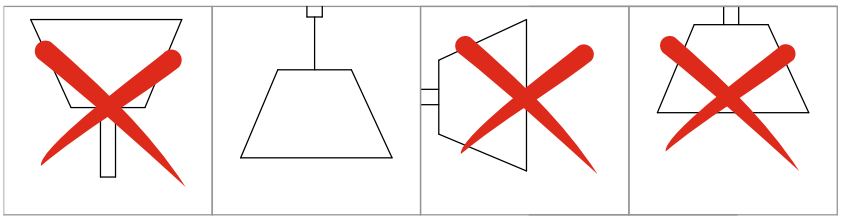

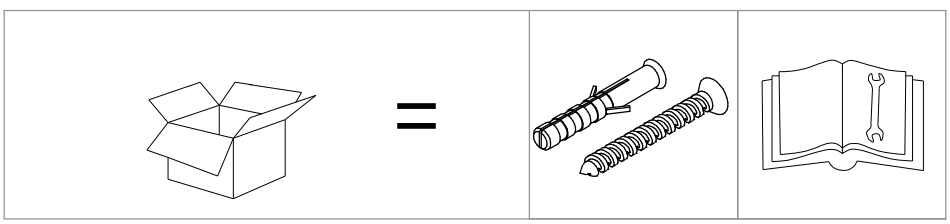

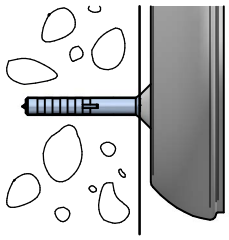

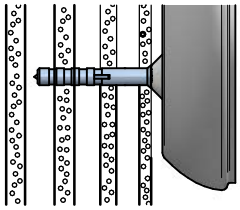

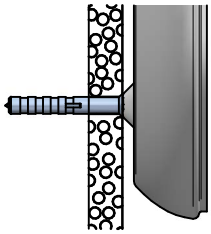

1

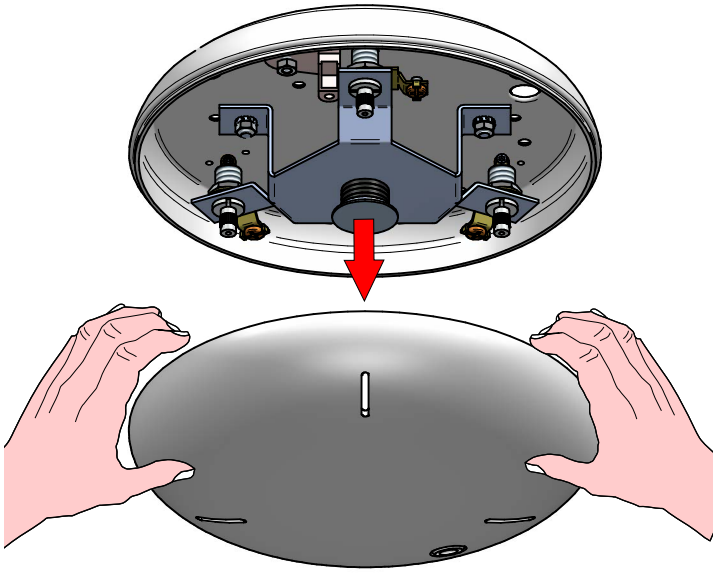

2

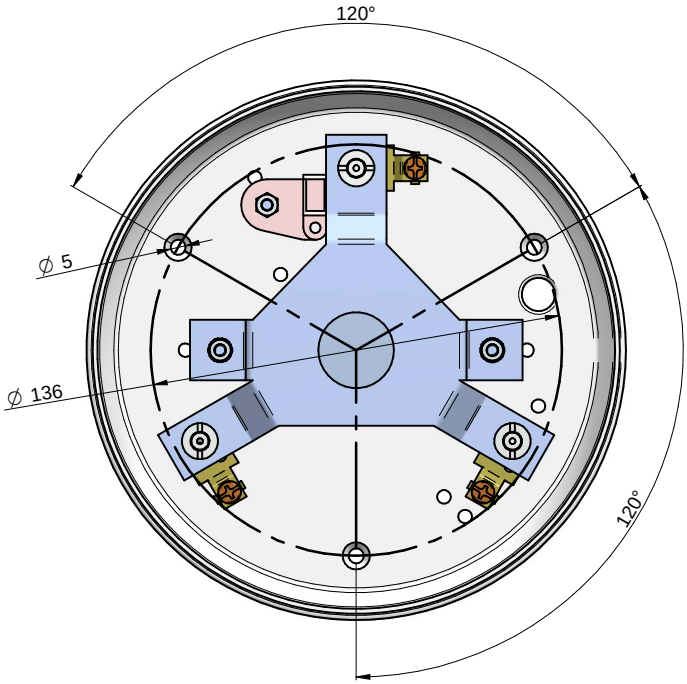

3

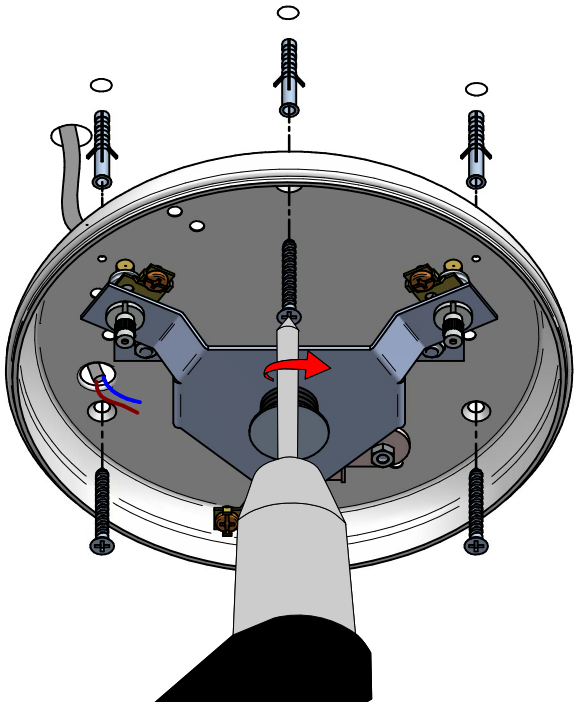

4

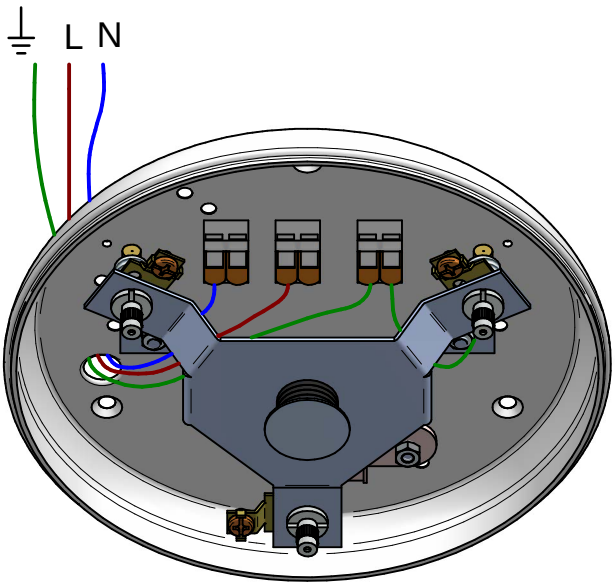

Phase-Cut
KIT0026

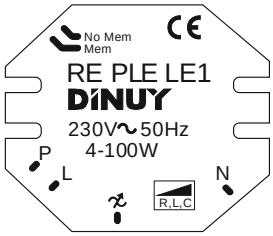

5

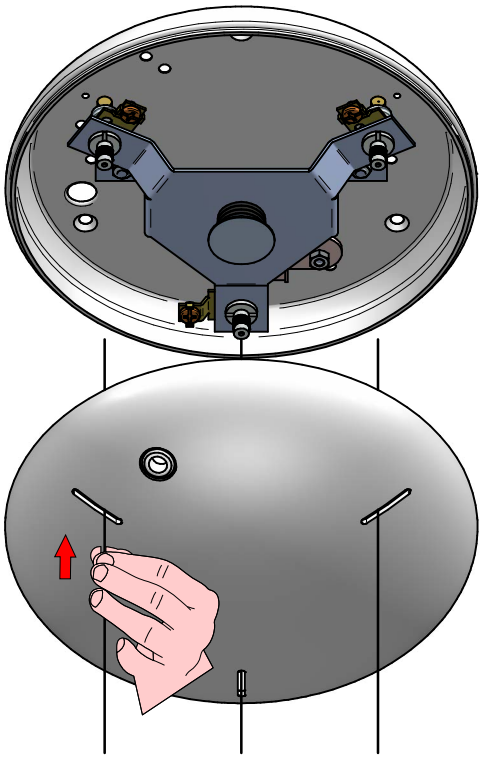

6

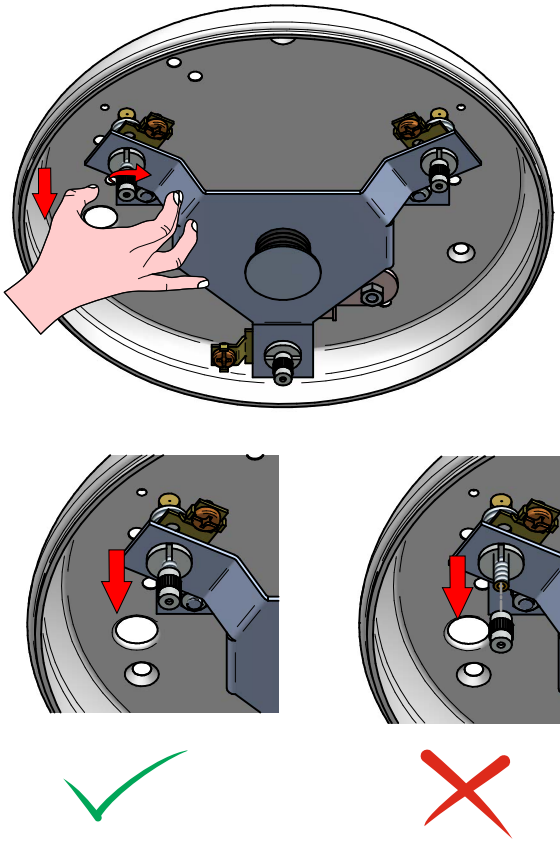

7

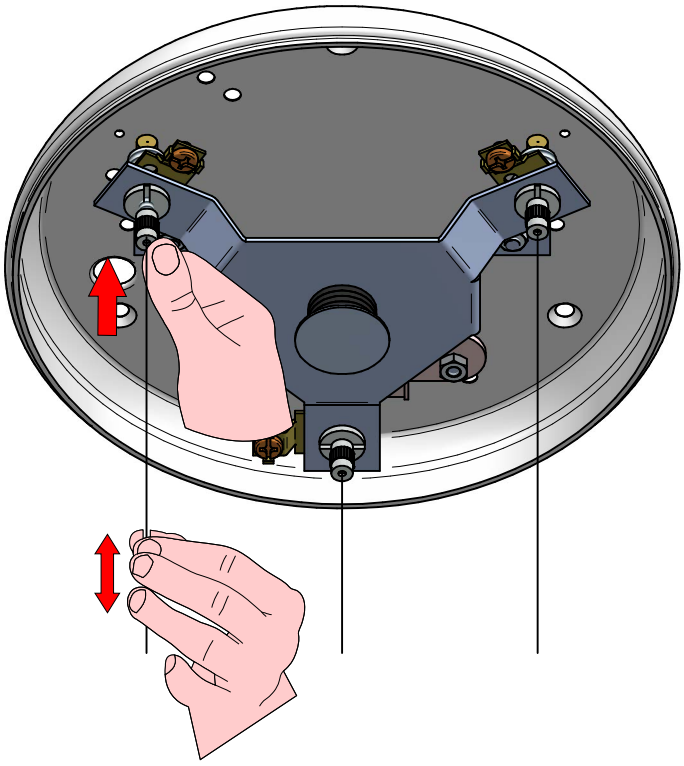

8

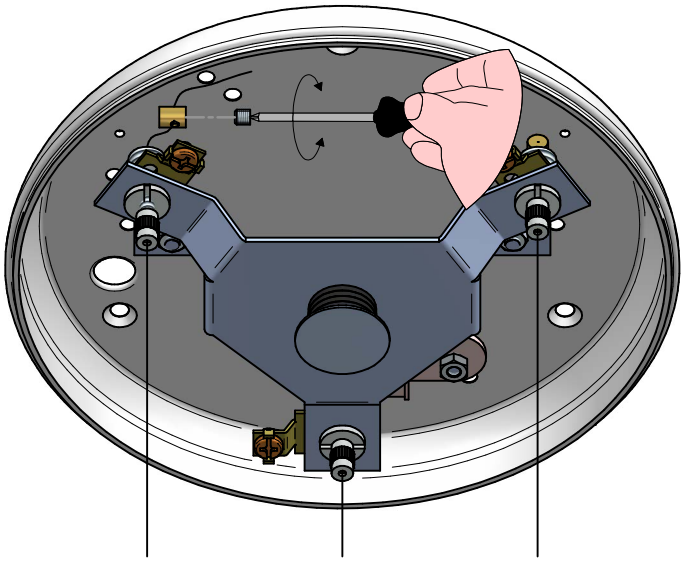

9

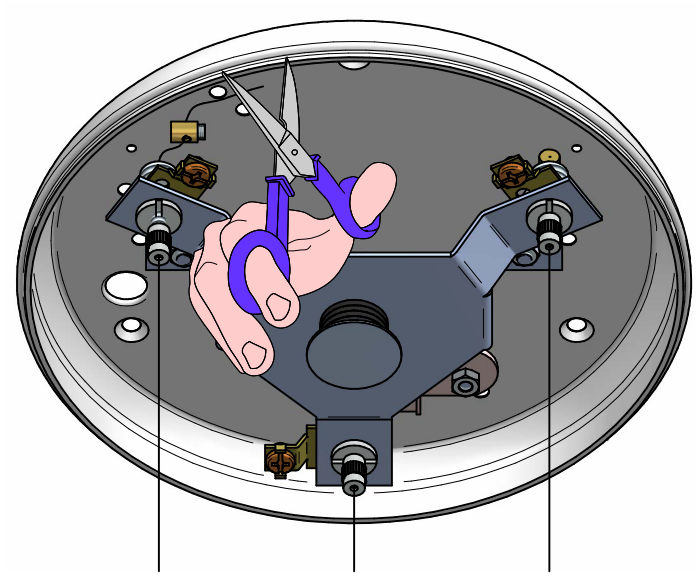

10

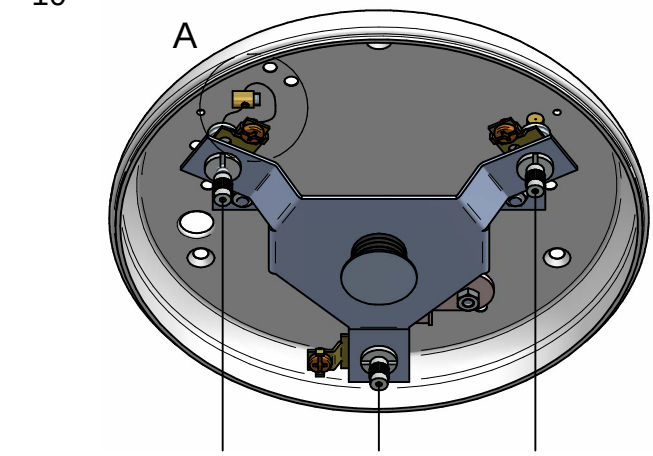

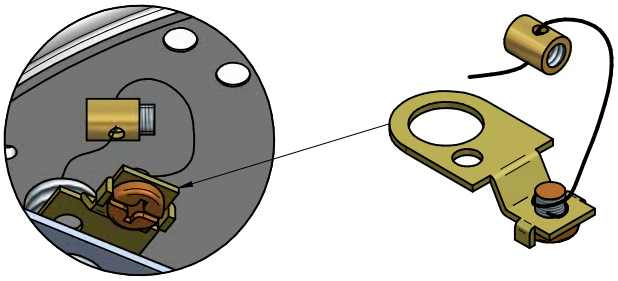

A

11

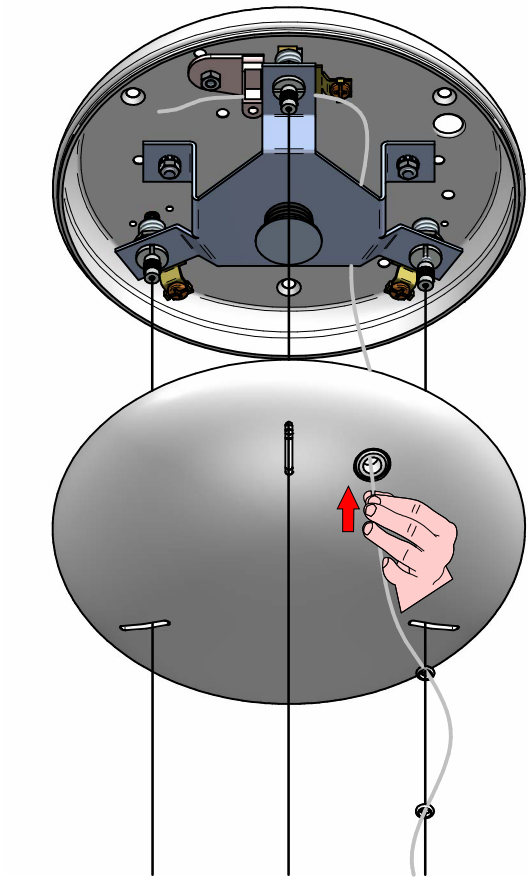

12

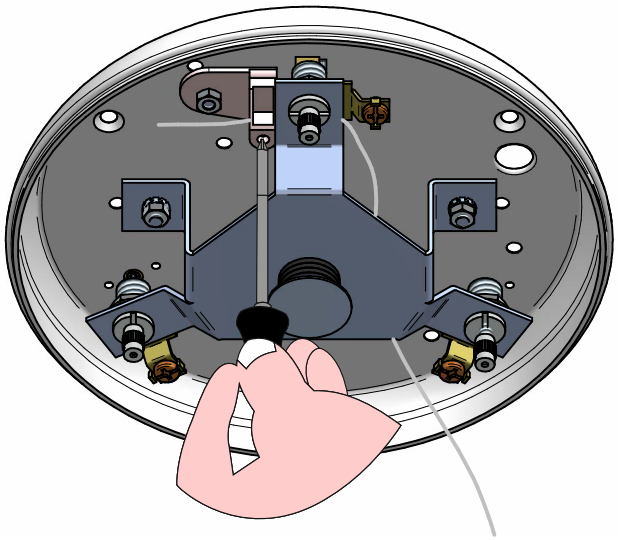

13

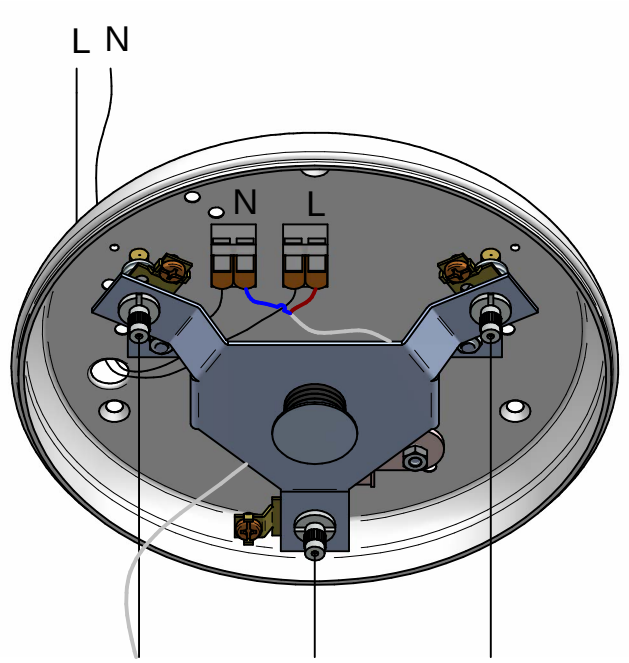

14

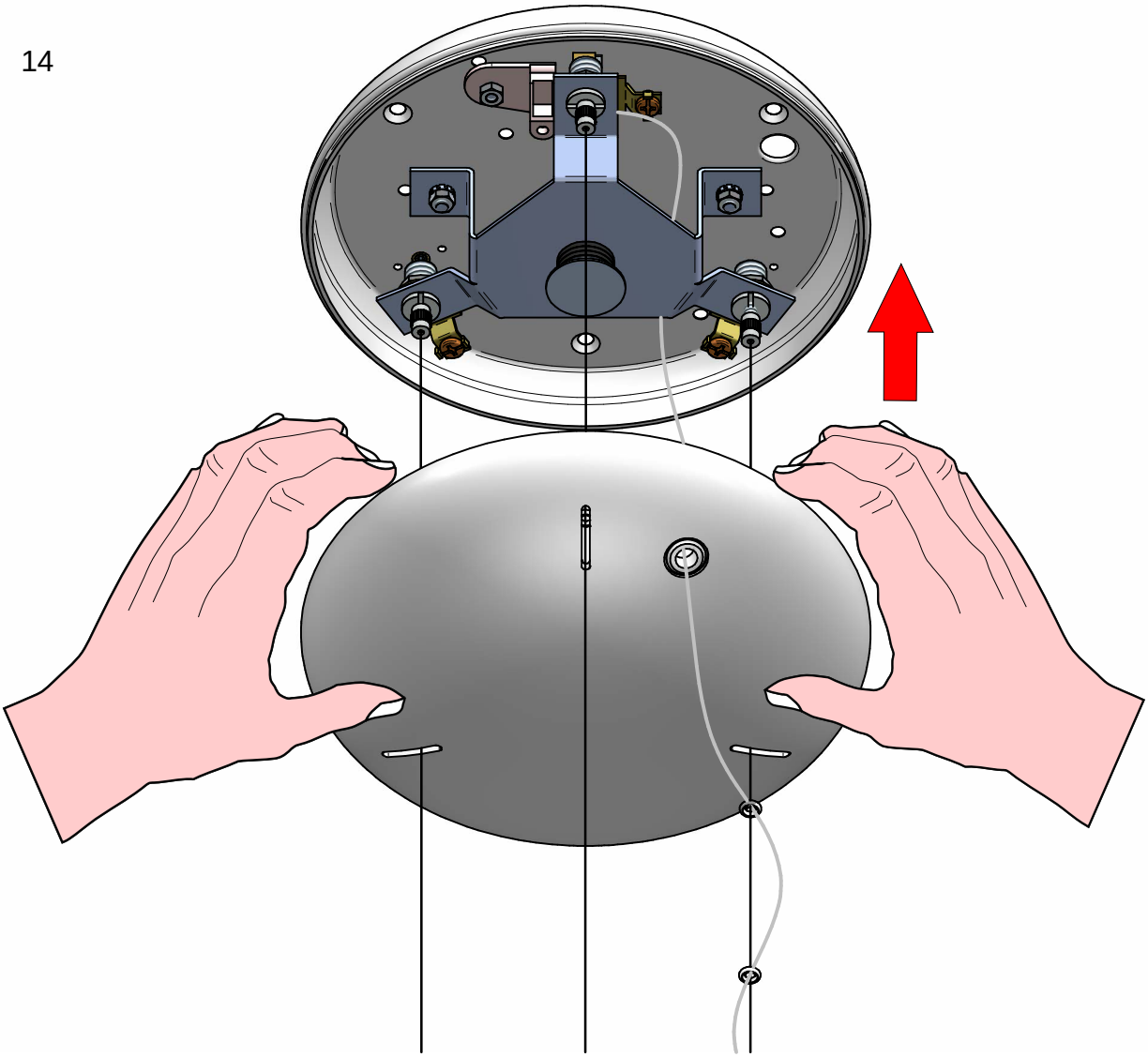

KIT0080 - CASAMBI



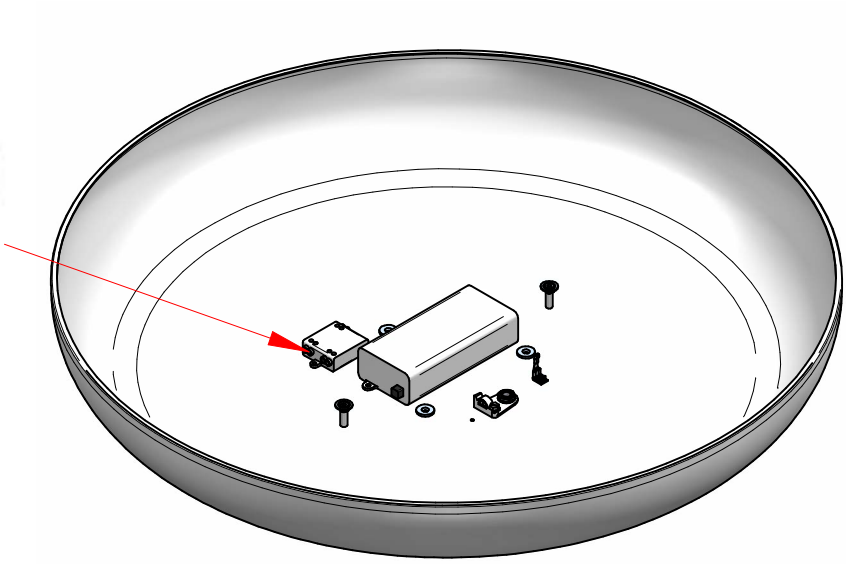

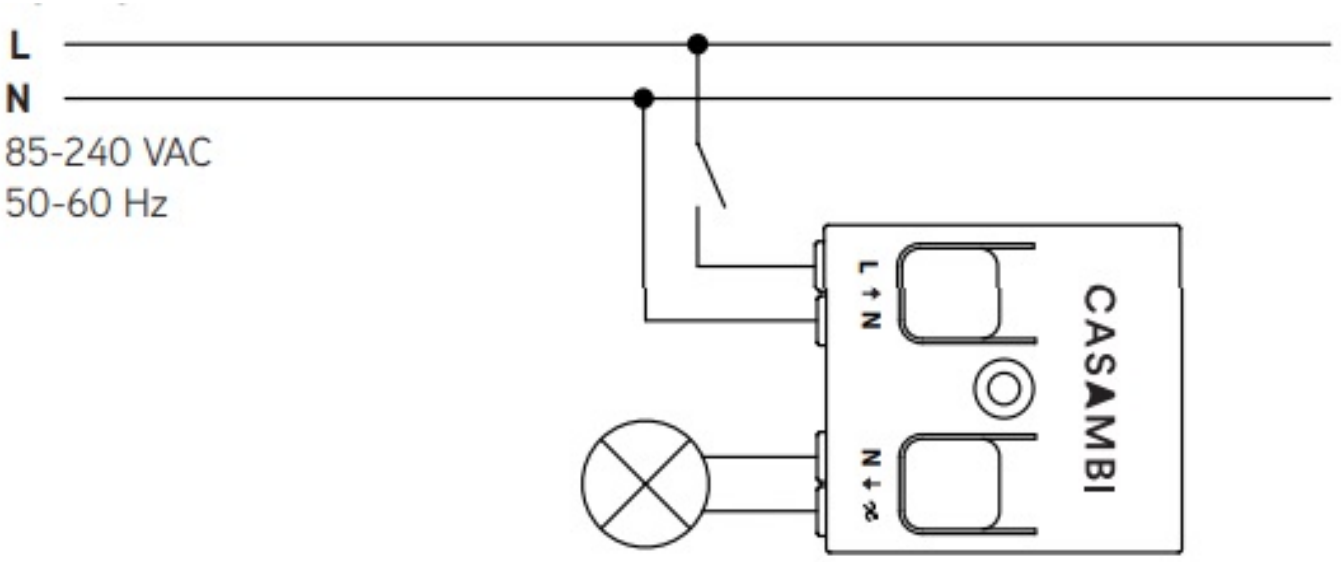



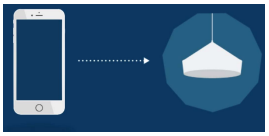



8540
REFLEXIO
rev: 2

linea light

STILNOVO

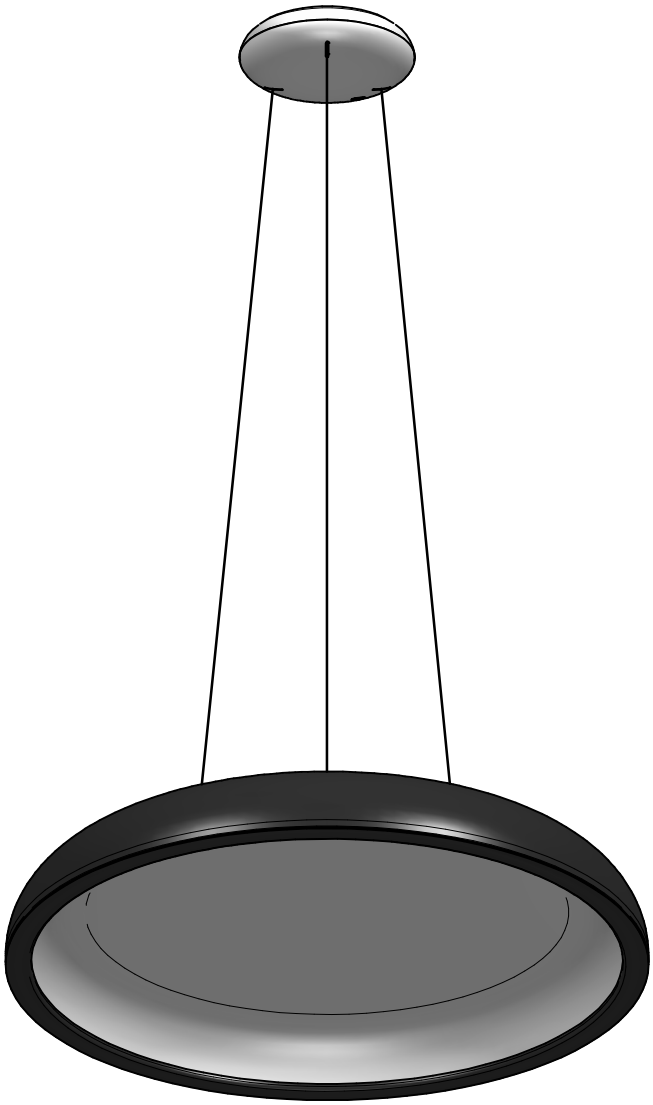

8540

8540M

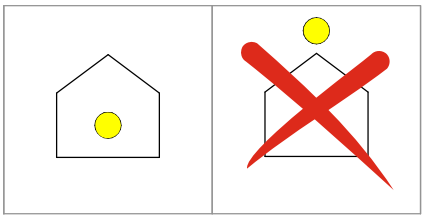

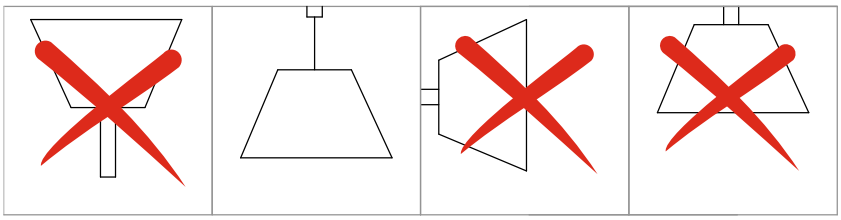

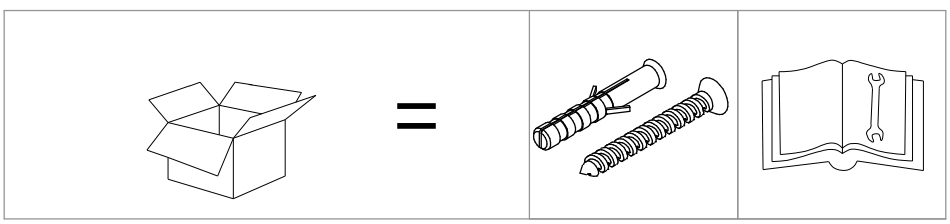

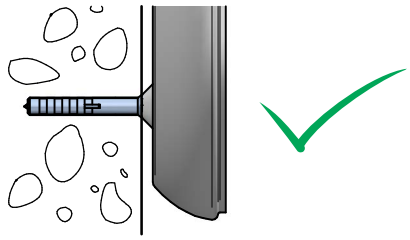

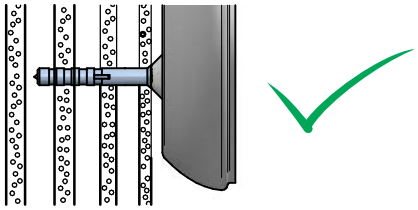

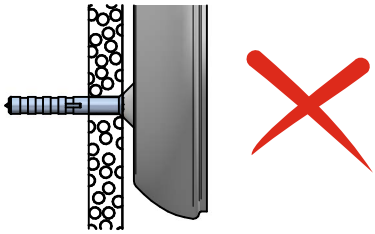

1

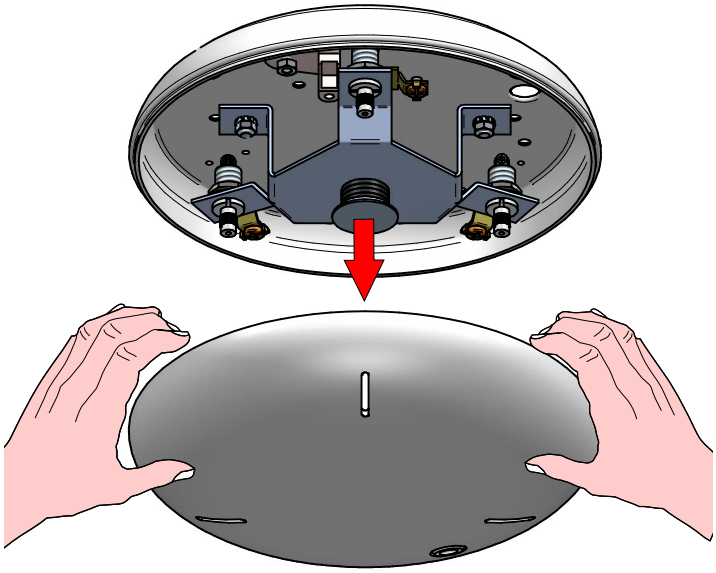

2

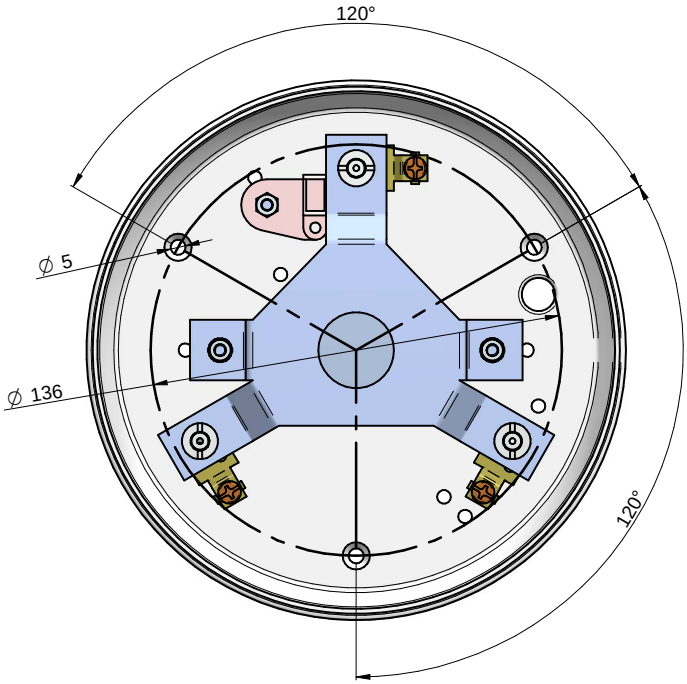

3

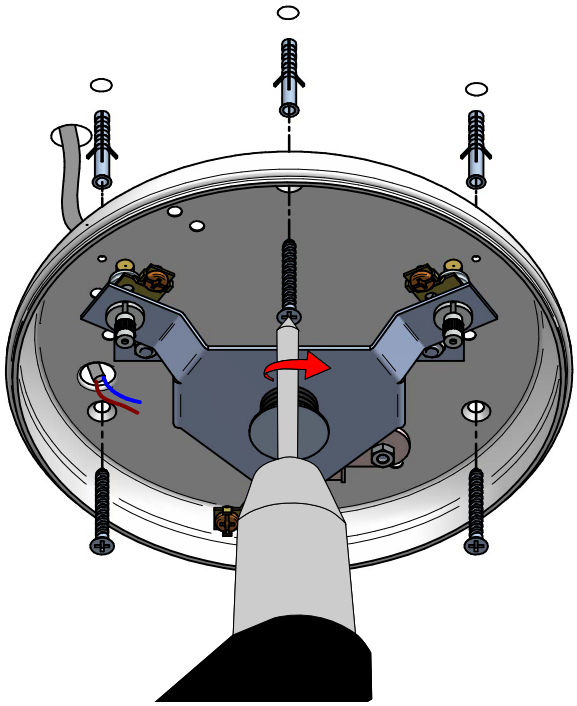

4

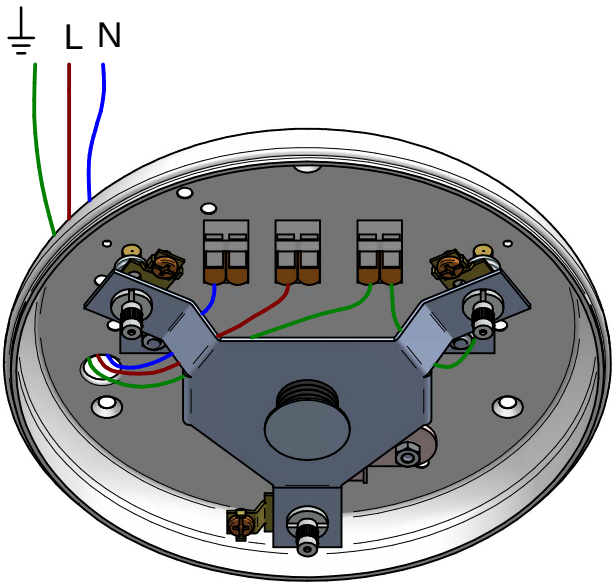

Phase-Cut
KIT0026

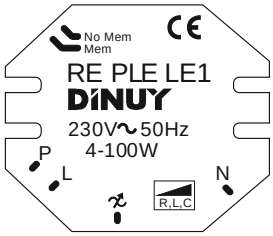

5

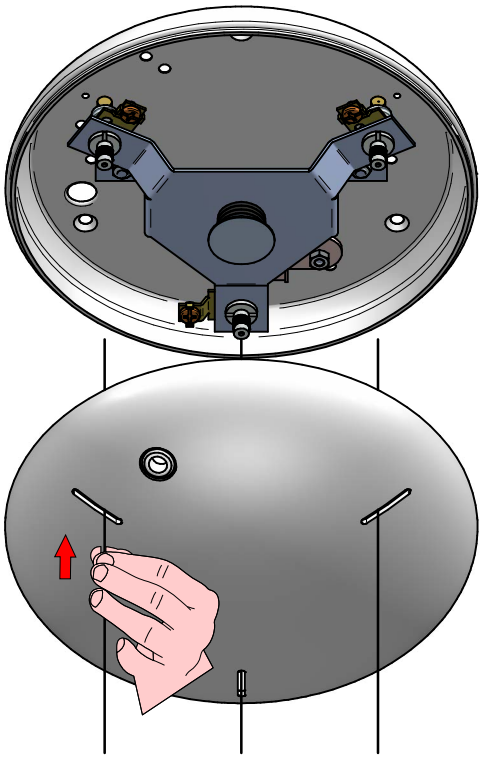

6

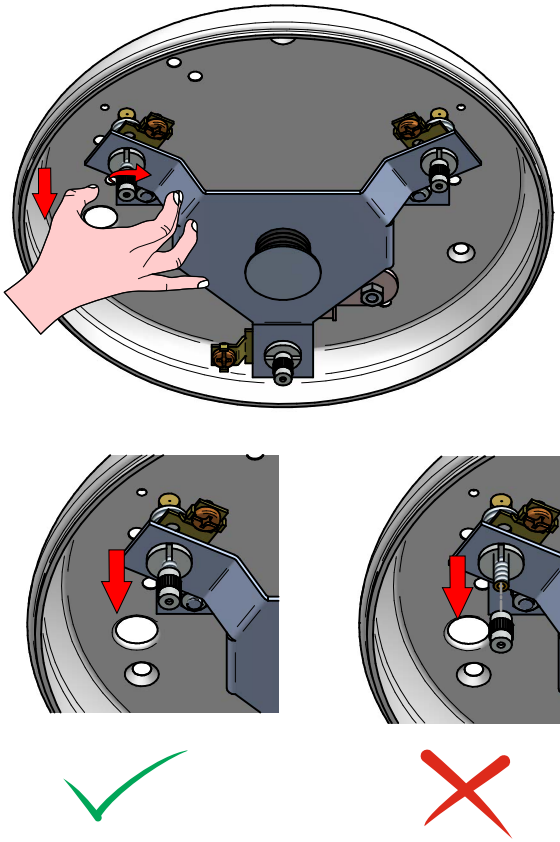

7

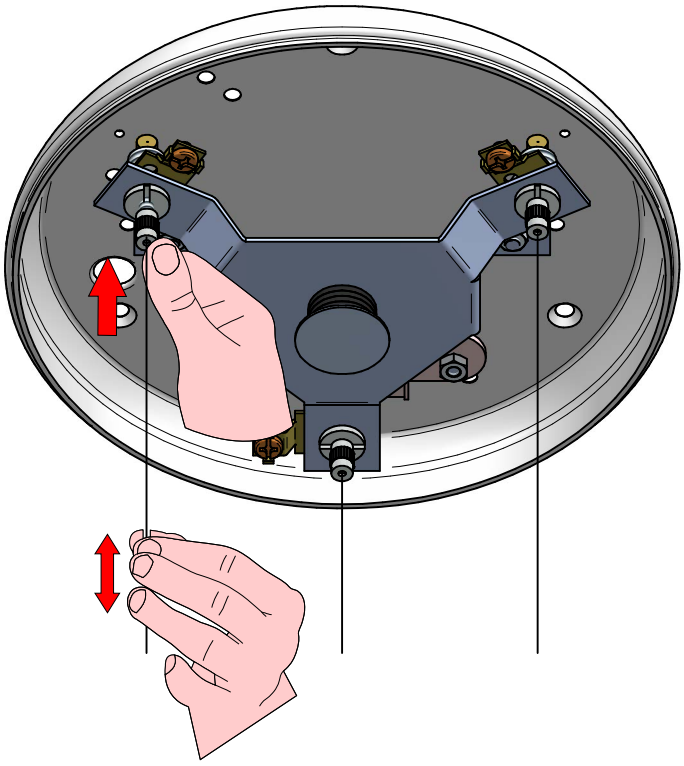

8

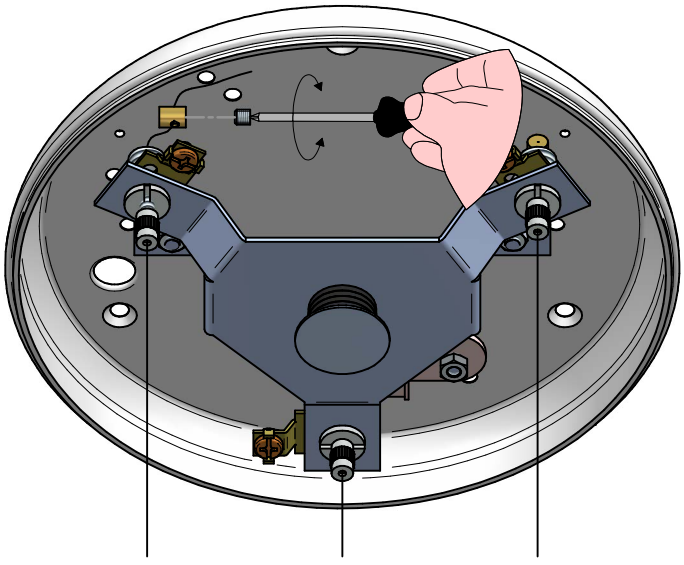

9

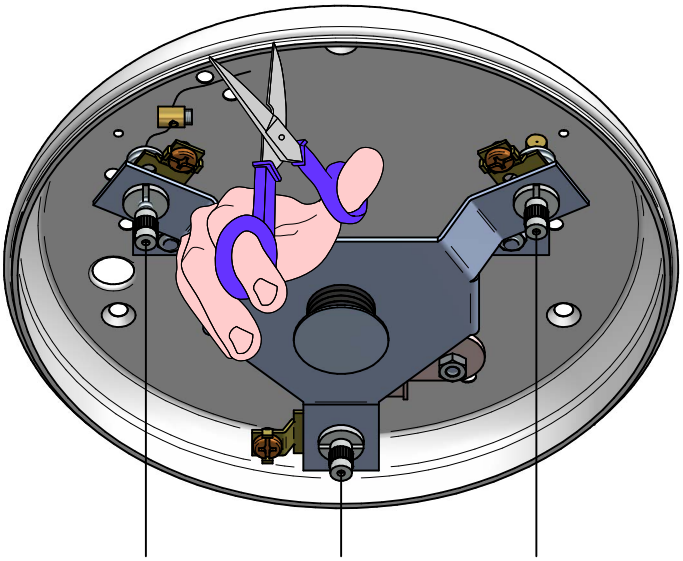

10

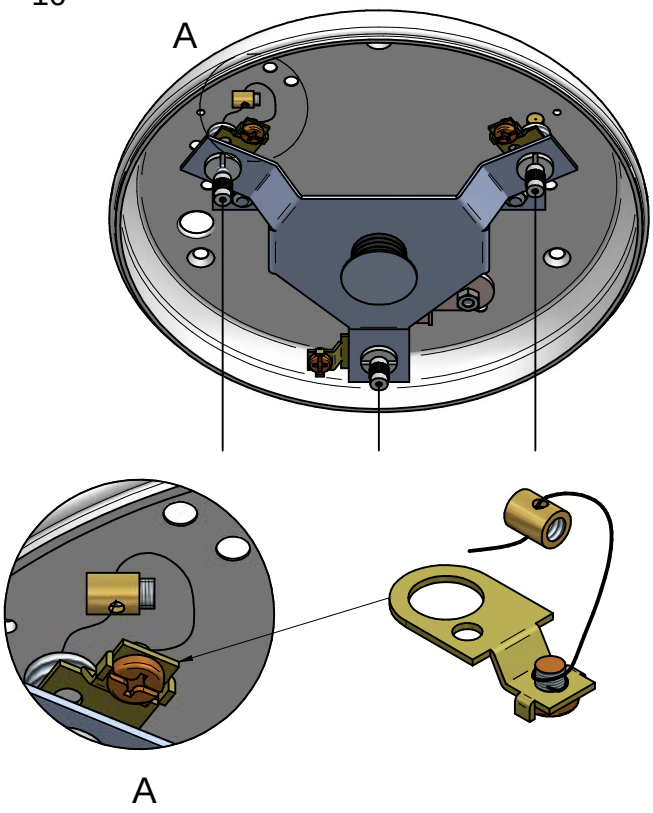

11

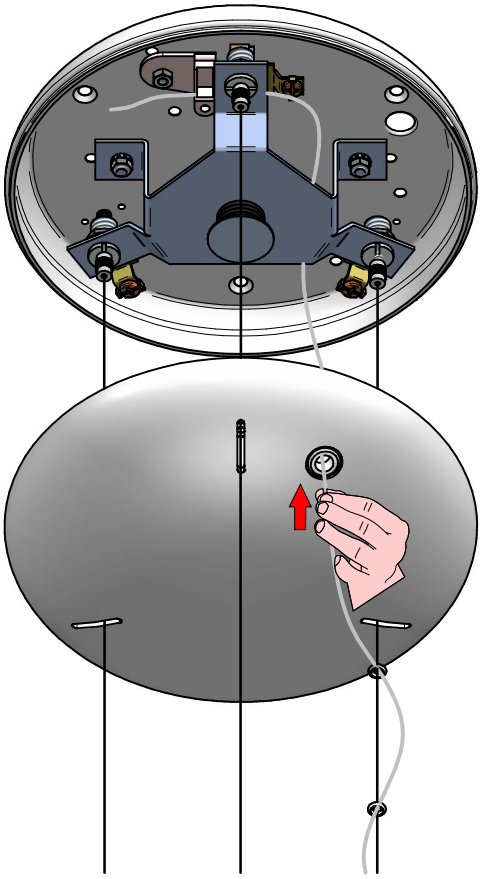

12

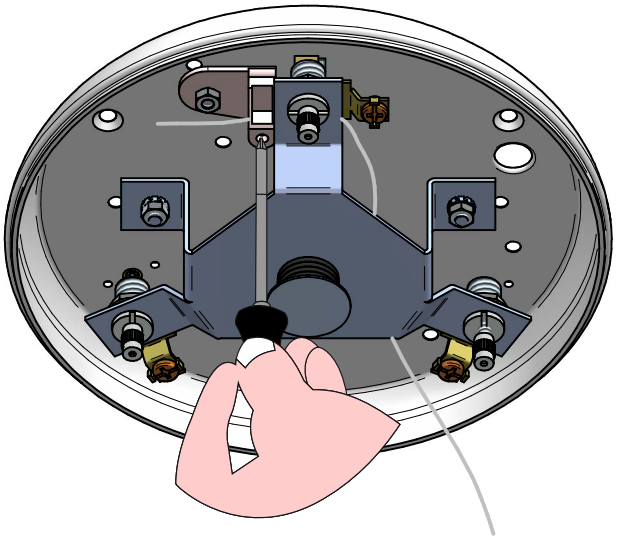

13

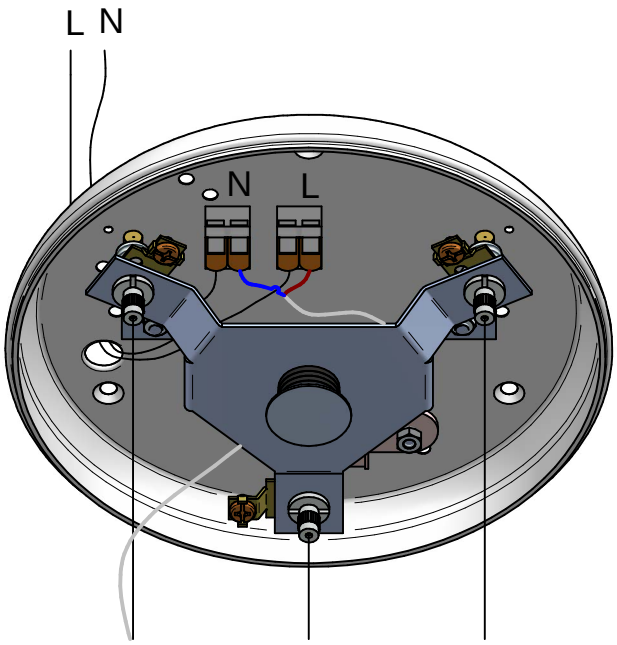

14

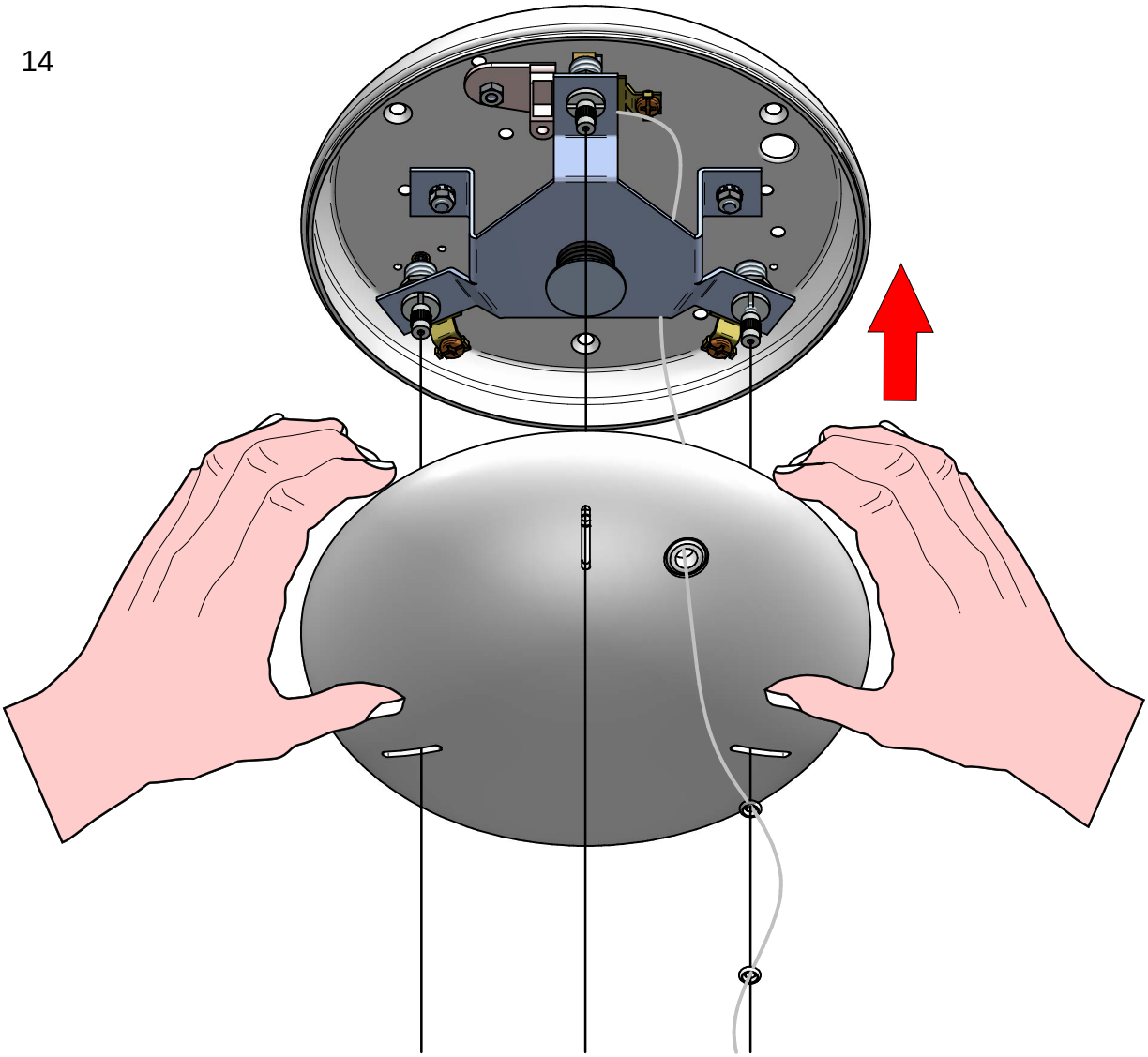

KIT0080 - CASAMBI



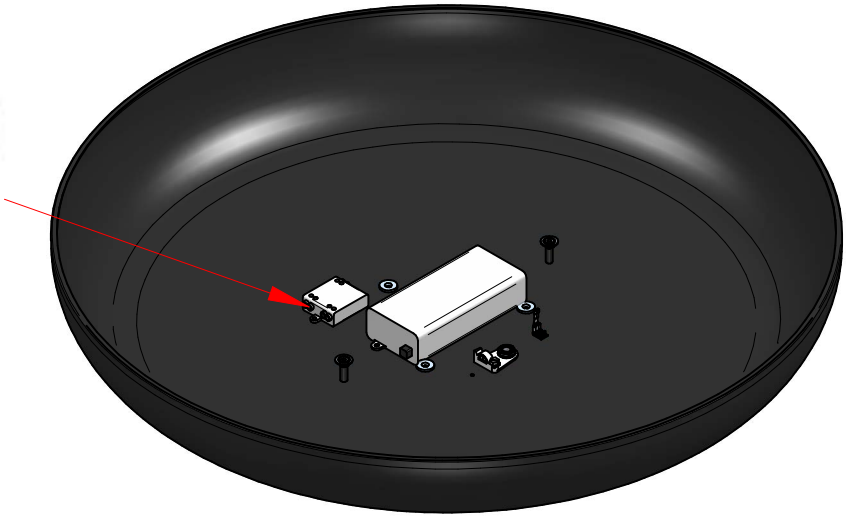

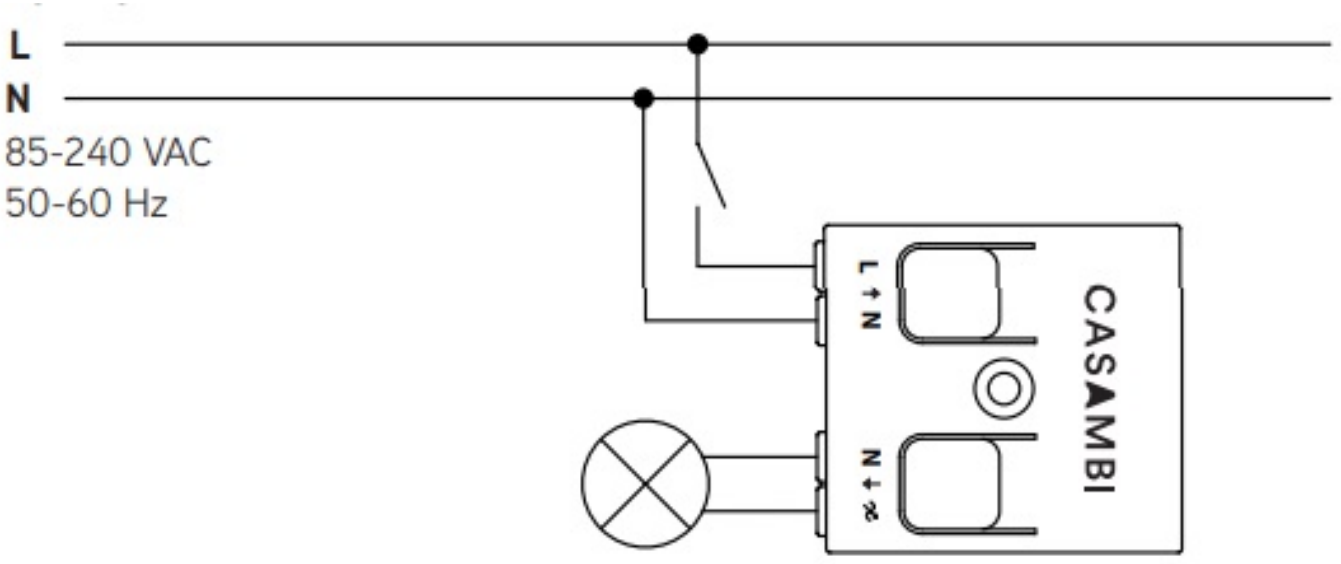



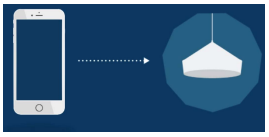



8541
REFLEXIO
rev: 3

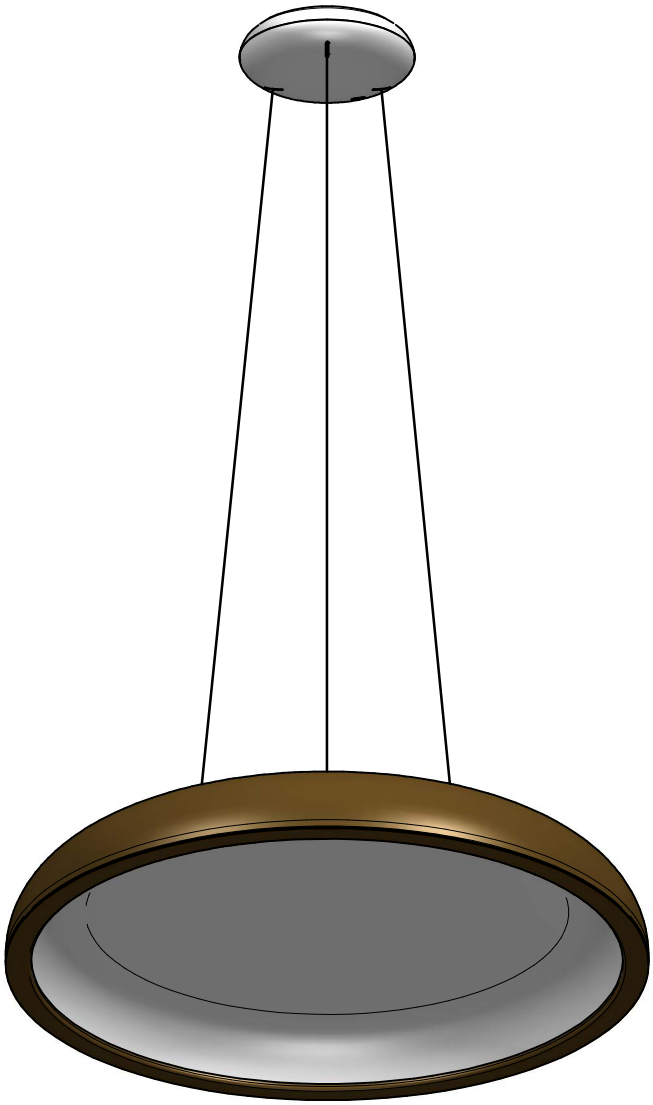

8541

8541M

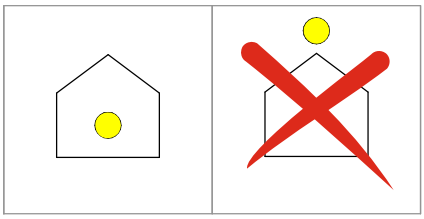

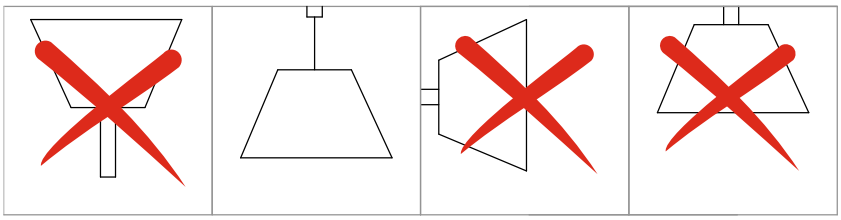

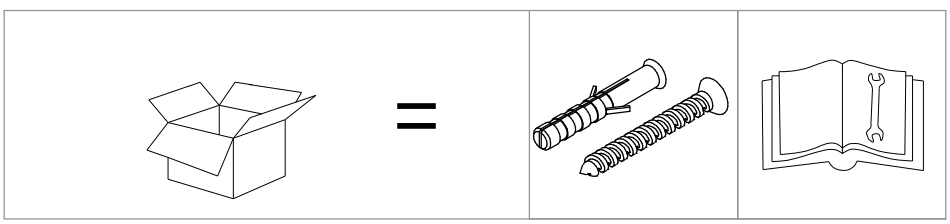

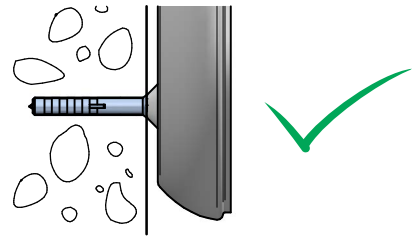

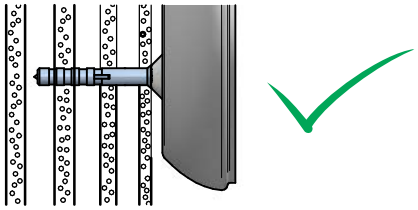

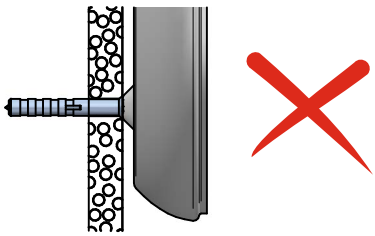

1

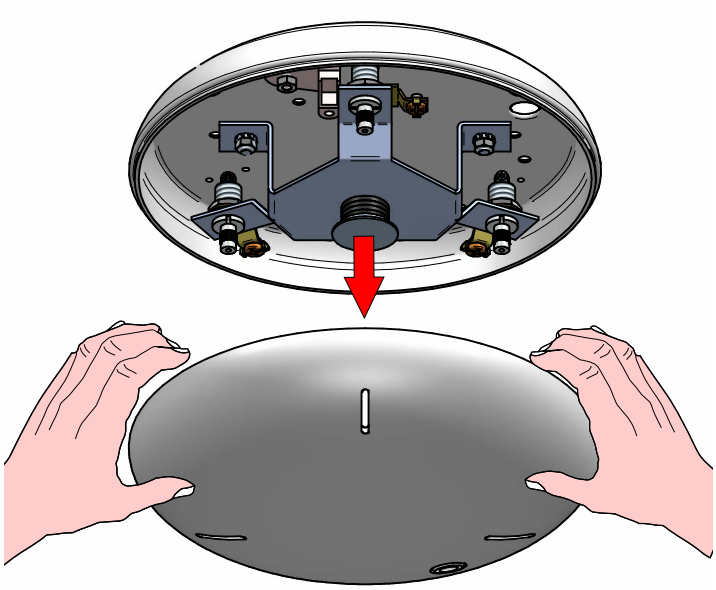

2

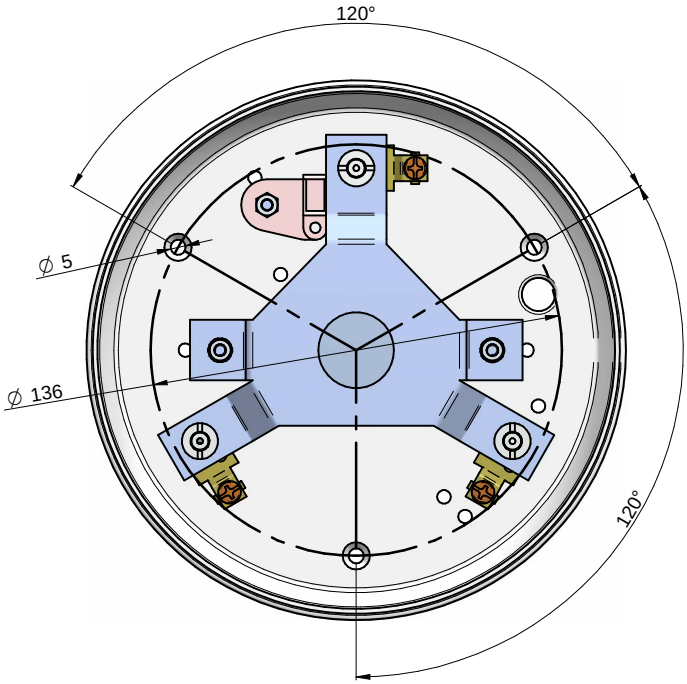

3

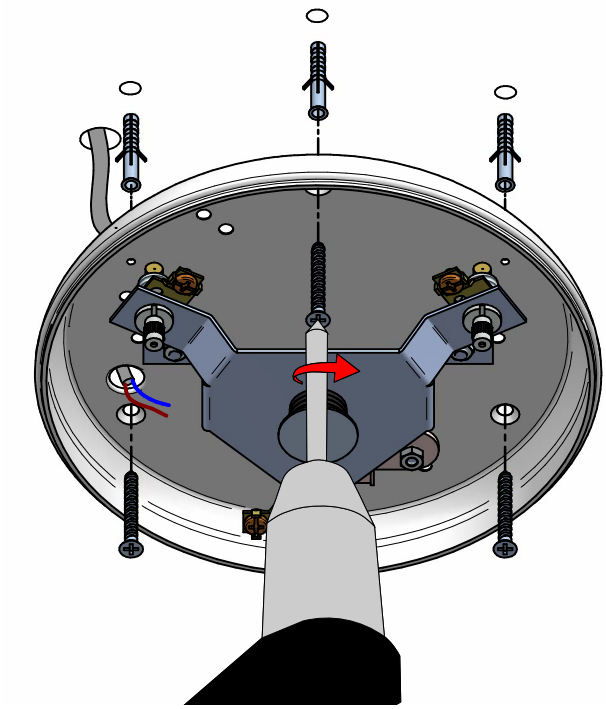

4

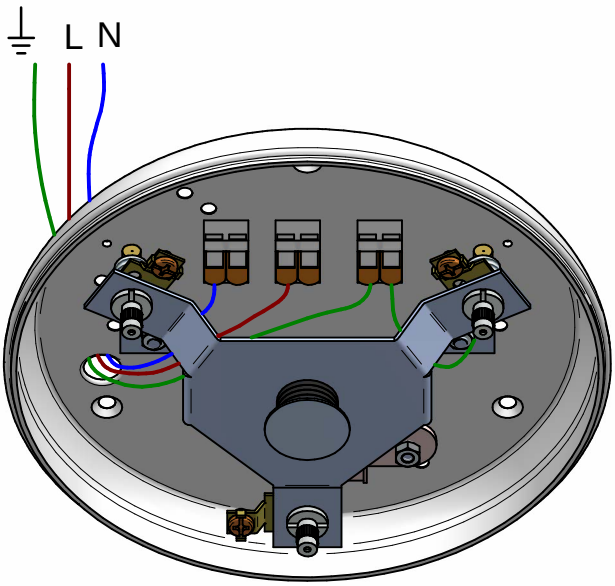

Phase-Cut
KIT0026

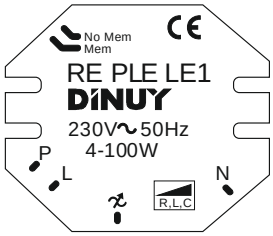

5

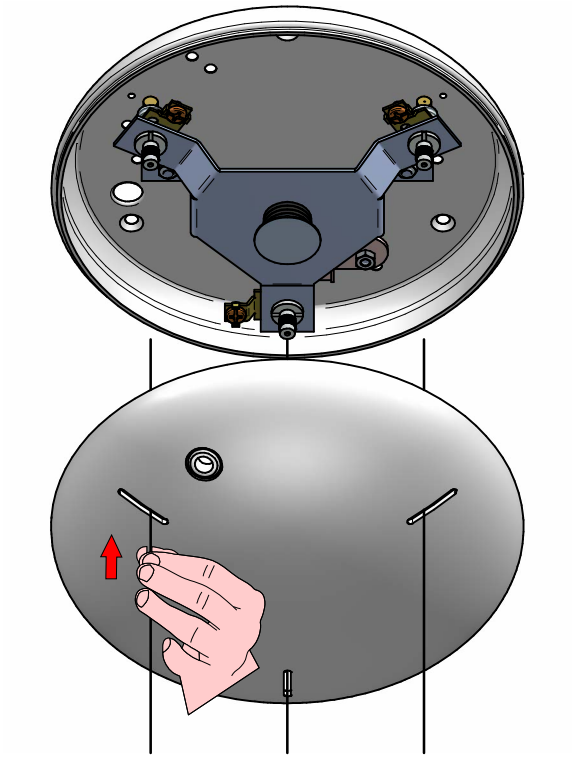

6

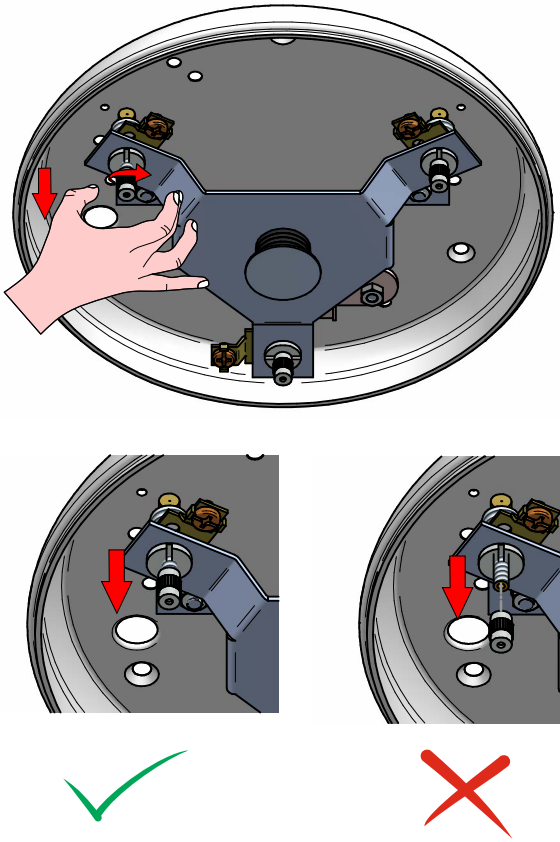

7

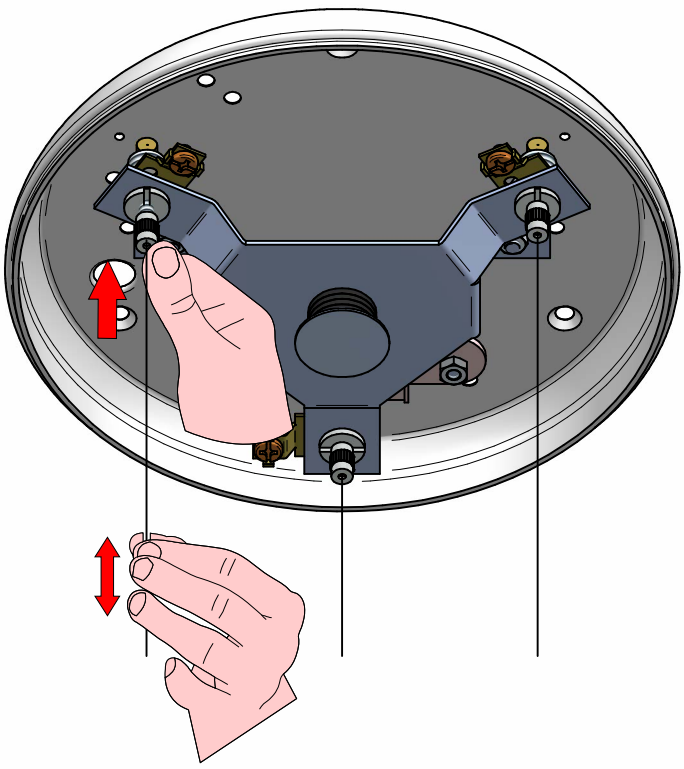

8

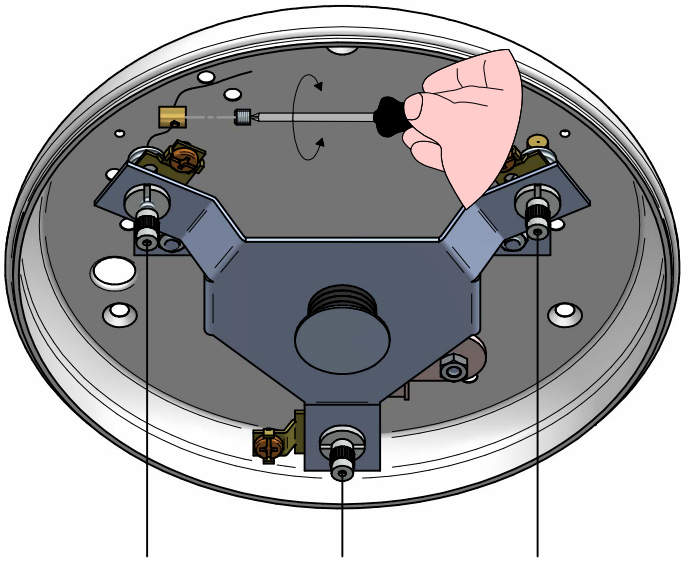

9

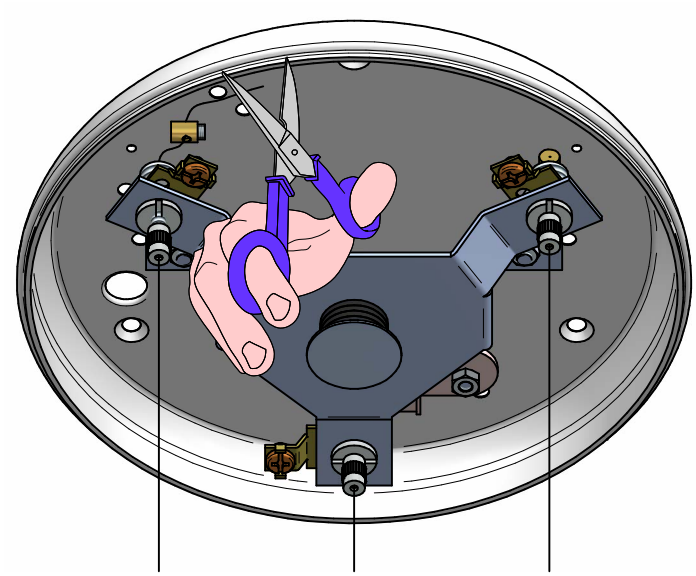

10

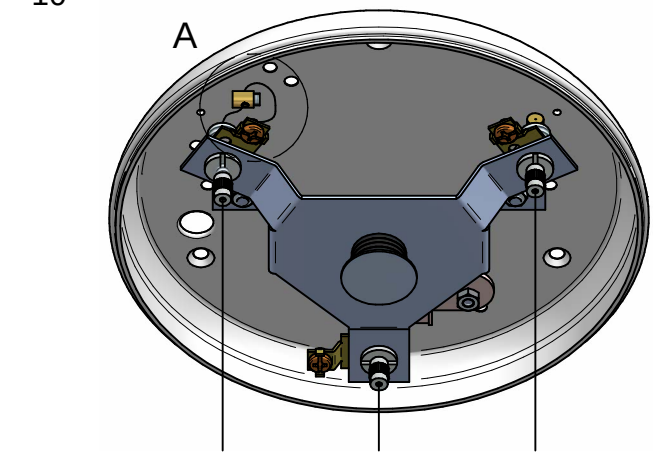

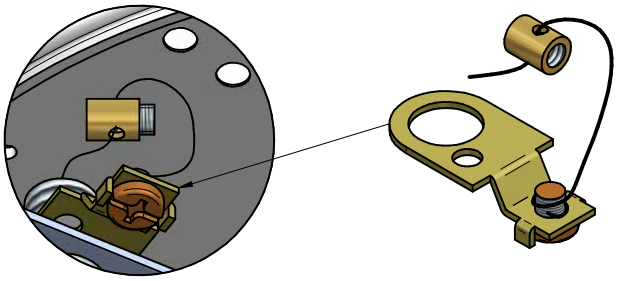

A

11

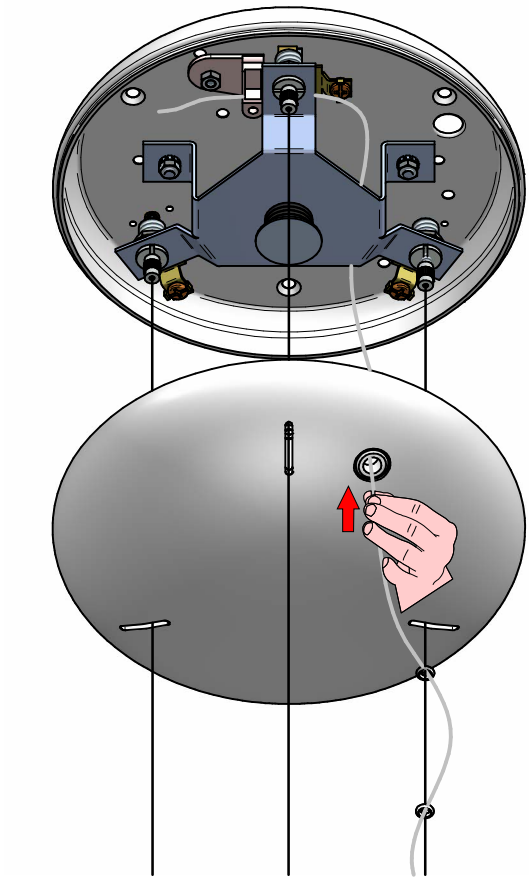

12

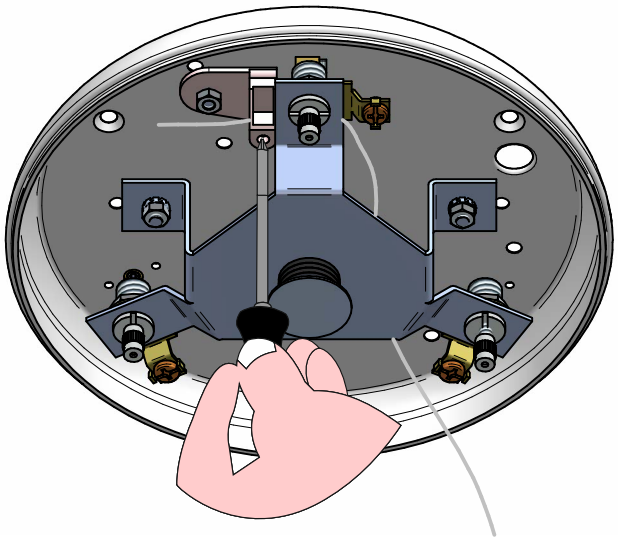

13

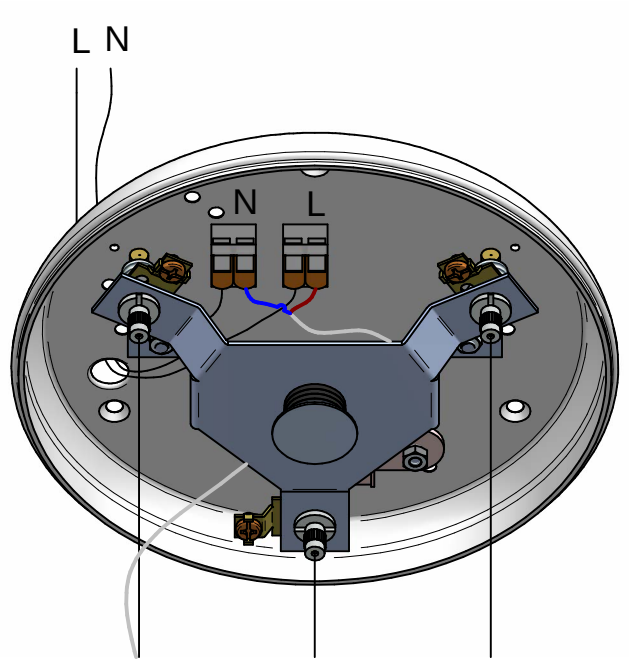

14

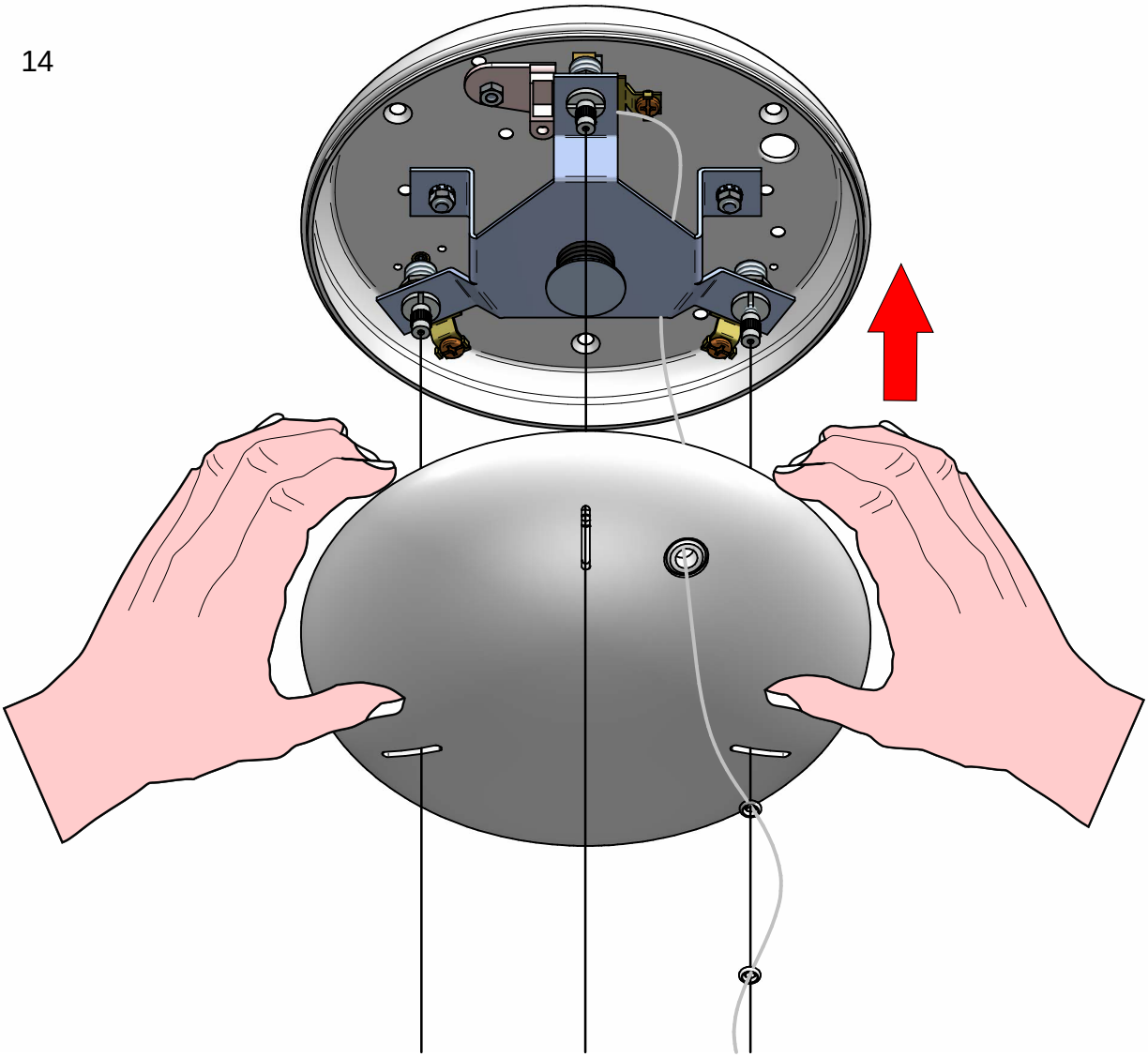

KIT0080 - CASAMBI



