“the light source contained in this luminaire shall only be replaced by the manufacturer or his service agent or a similar qualified person”

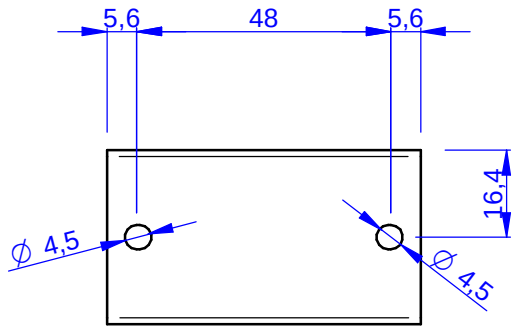

FIG. 1

CODE	Figure
65190	FIG. 1
65191	FIG. 1
65192	FIG. 1
65193	FIG. 1

1

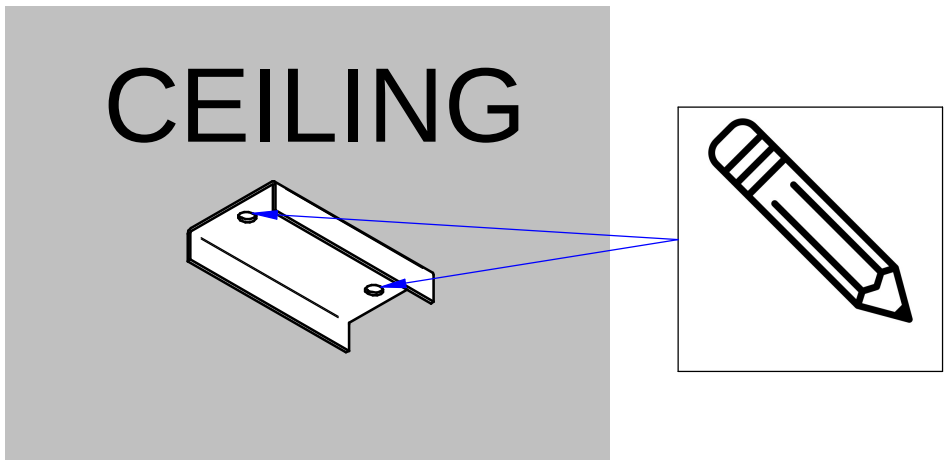

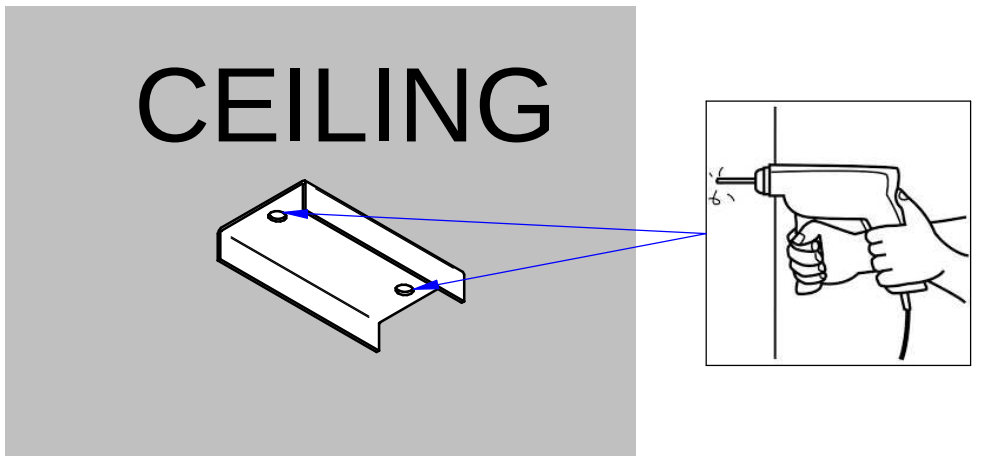

2

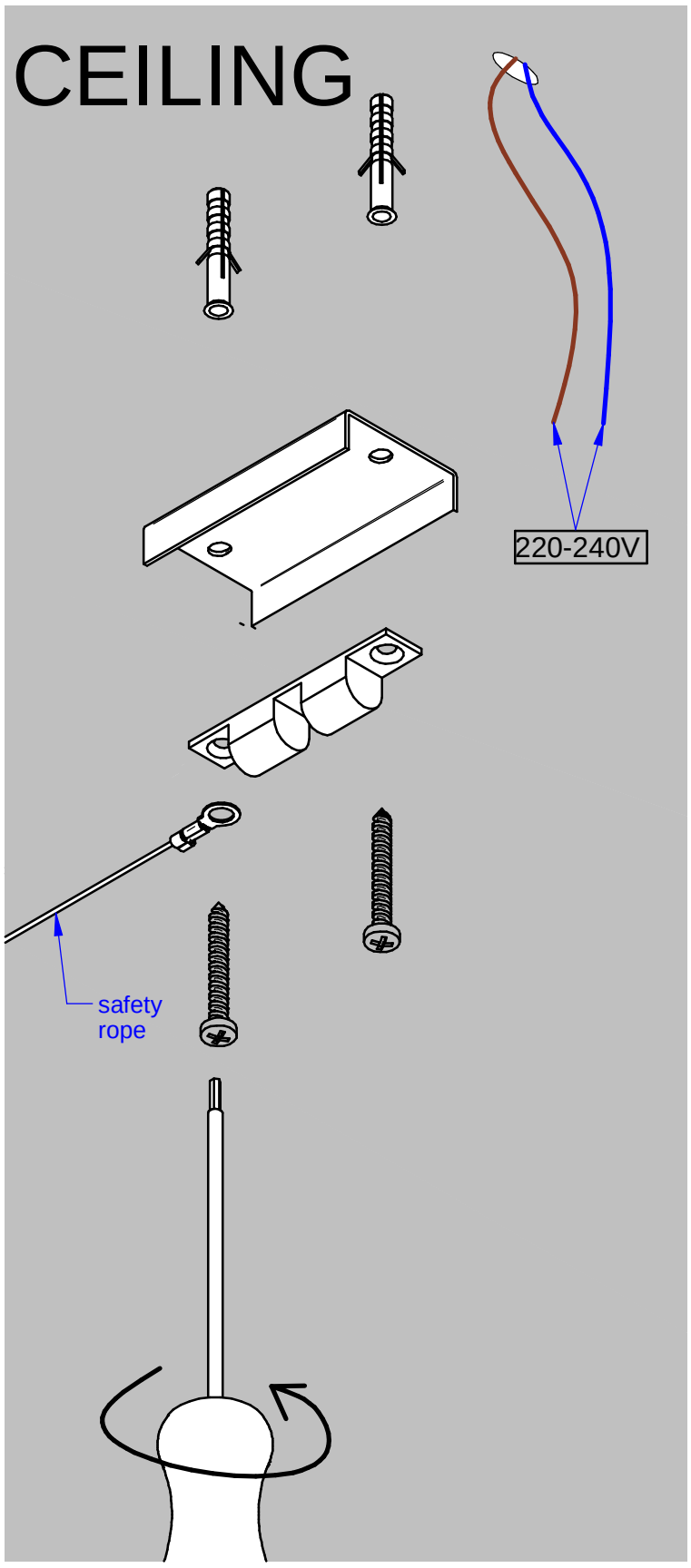

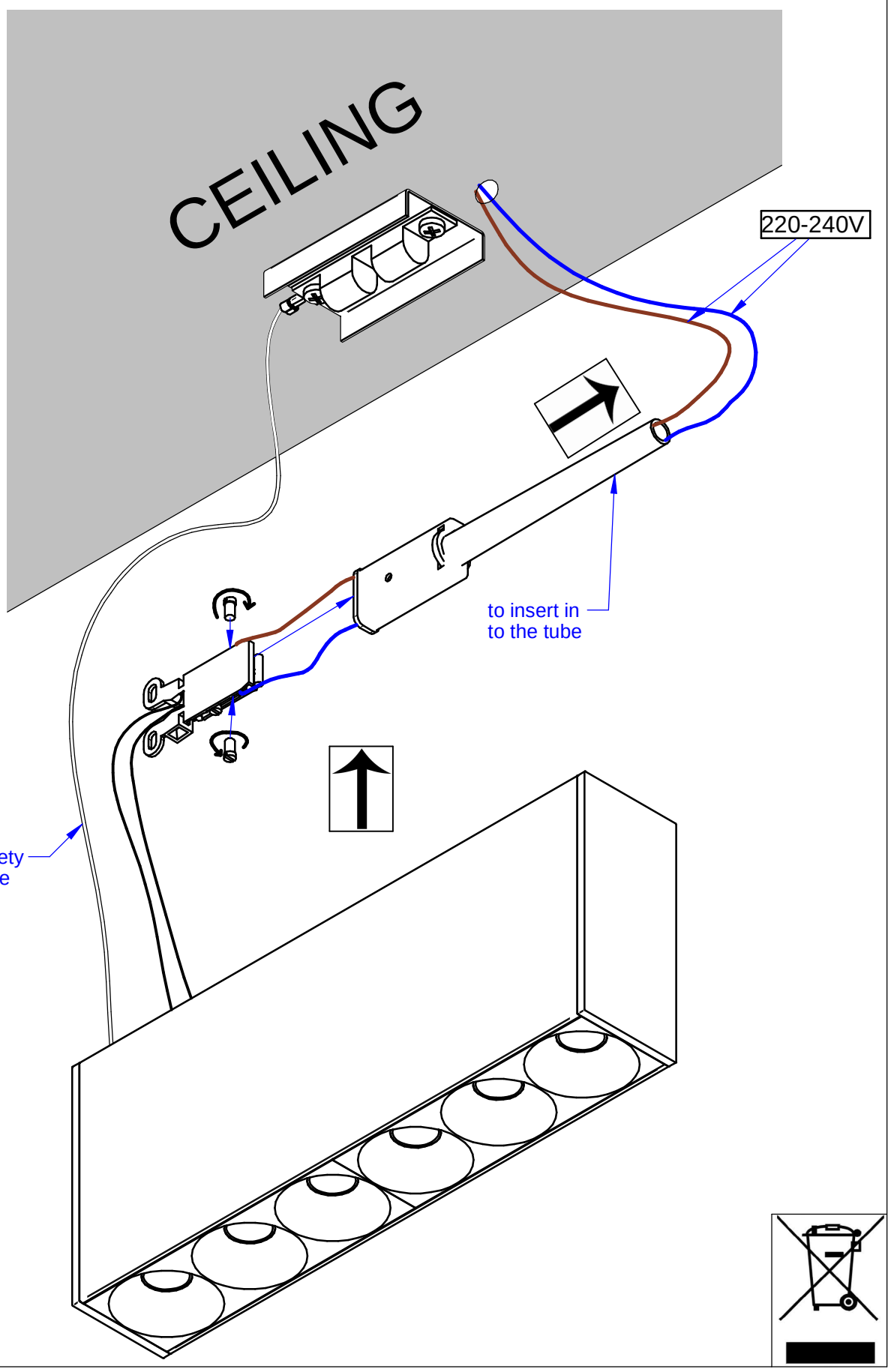

3

4