GYPSUM COLOR
rev:1

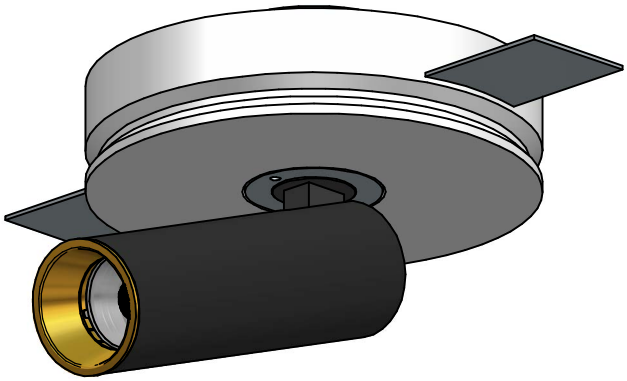

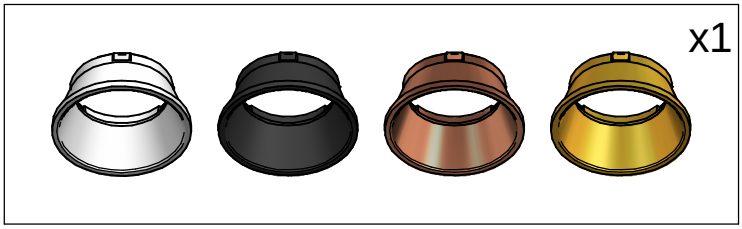

Code	Colors	Led	Lens	Driver type	Power
CA035AWHWFL	White	3000K	24°	ON/OFF	12W
CA035AWHMFL	White	2700K	24°	ON/OFF	12W
CA035AWHWMW	White	3000K	42°	ON/OFF	12W
CA035AWHMMW	White	2700K	42°	ON/OFF	12W
CA035ABBWFL	Black	3000K	24°	ON/OFF	12W
CA035ABBMFL	Black	2700K	24°	ON/OFF	12W
CA035ABBWMW	Black	3000K	42°	ON/OFF	12W
CA035ABBMMW	Black	2700K	42°	ON/OFF	12W
CA035JWHWFL	White	3000K	24°	Class III	12W
CA035JWHMFL	White	2700K	24°	Class III	12W
CA035JWHWMW	White	3000K	42°	Class III	12W
CA035JWHMMW	White	2700K	42°	Class III	12W
CA035JBBWFL	Black	3000K	24°	Class III	12W
CA035JBBMFL	Black	2700K	24°	Class III	12W
CA035JBBWMW	Black	3000K	42°	Class III	12W
CA035JBBMMW	Black	2700K	42°	Class III	12W

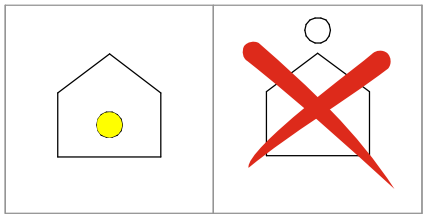

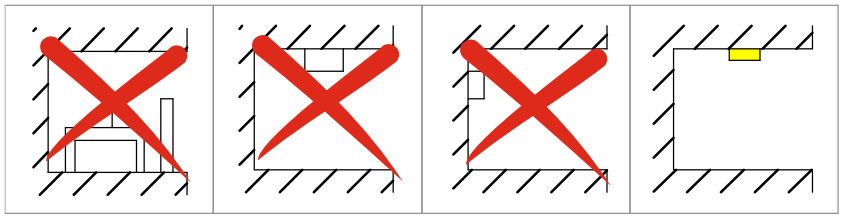

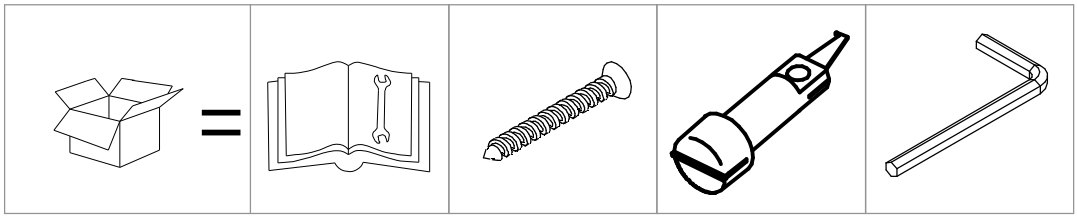

1

Code	Type
CA035JWHWFL	Class III
CA035JWHMFL	Class III
CA035JWHWMW	Class III
CA035JWHMMW	Class III
CA035JBBWFL	Class III
CA035JBBMFL	Class III
CA035JBBWMW	Class III
CA035JBBMMW	Class III

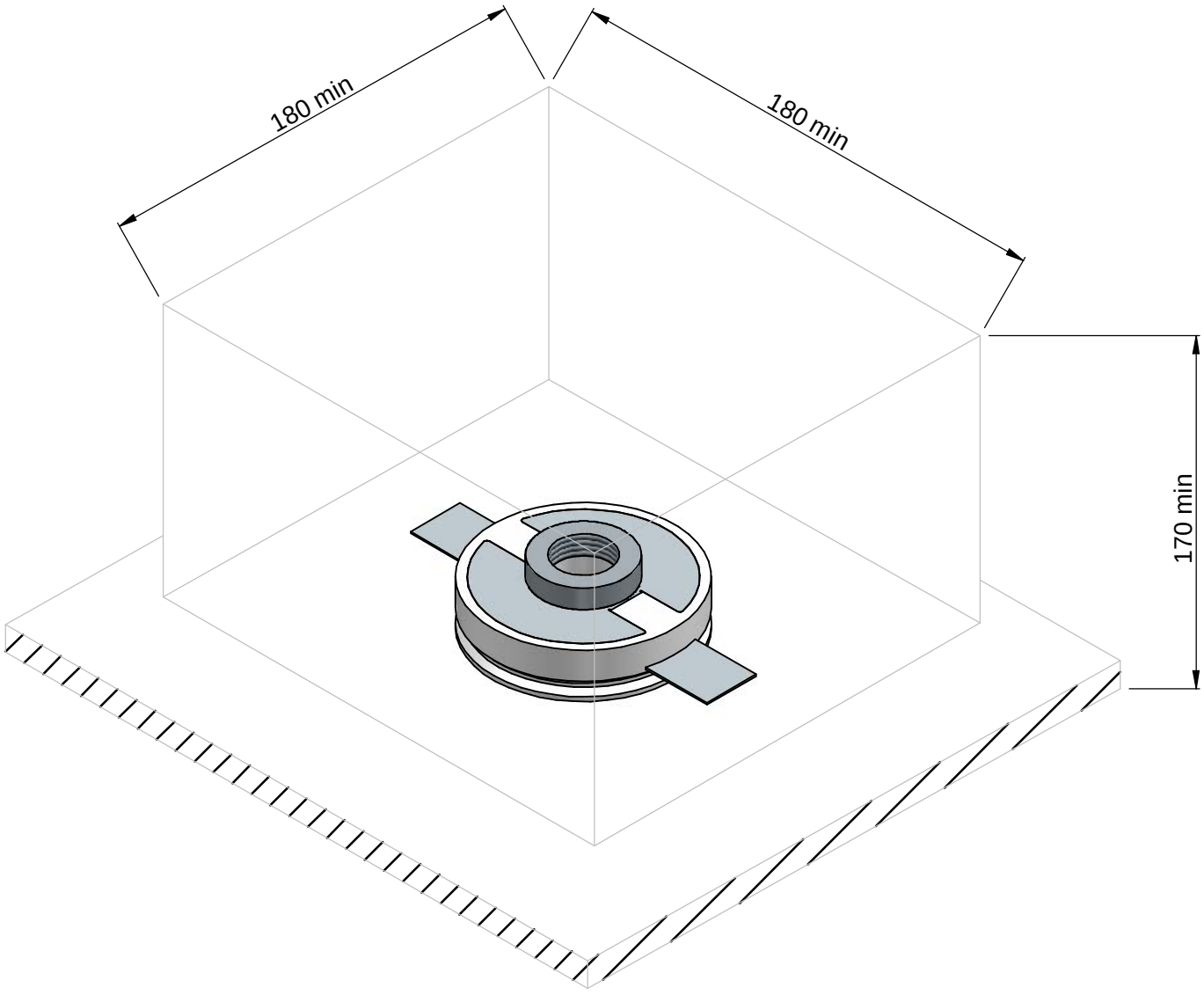

1.2

Code	Type
CA035AWHWFL	ON/OFF
CA035AWHMFL	ON/OFF
CA035AWHWMW	ON/OFF
CA035AWHMMW	ON/OFF
CA035ABBWFL	ON/OFF
CA035ABBMFL	ON/OFF
CA035ABBWMW	ON/OFF
CA035ABBMMW	ON/OFF

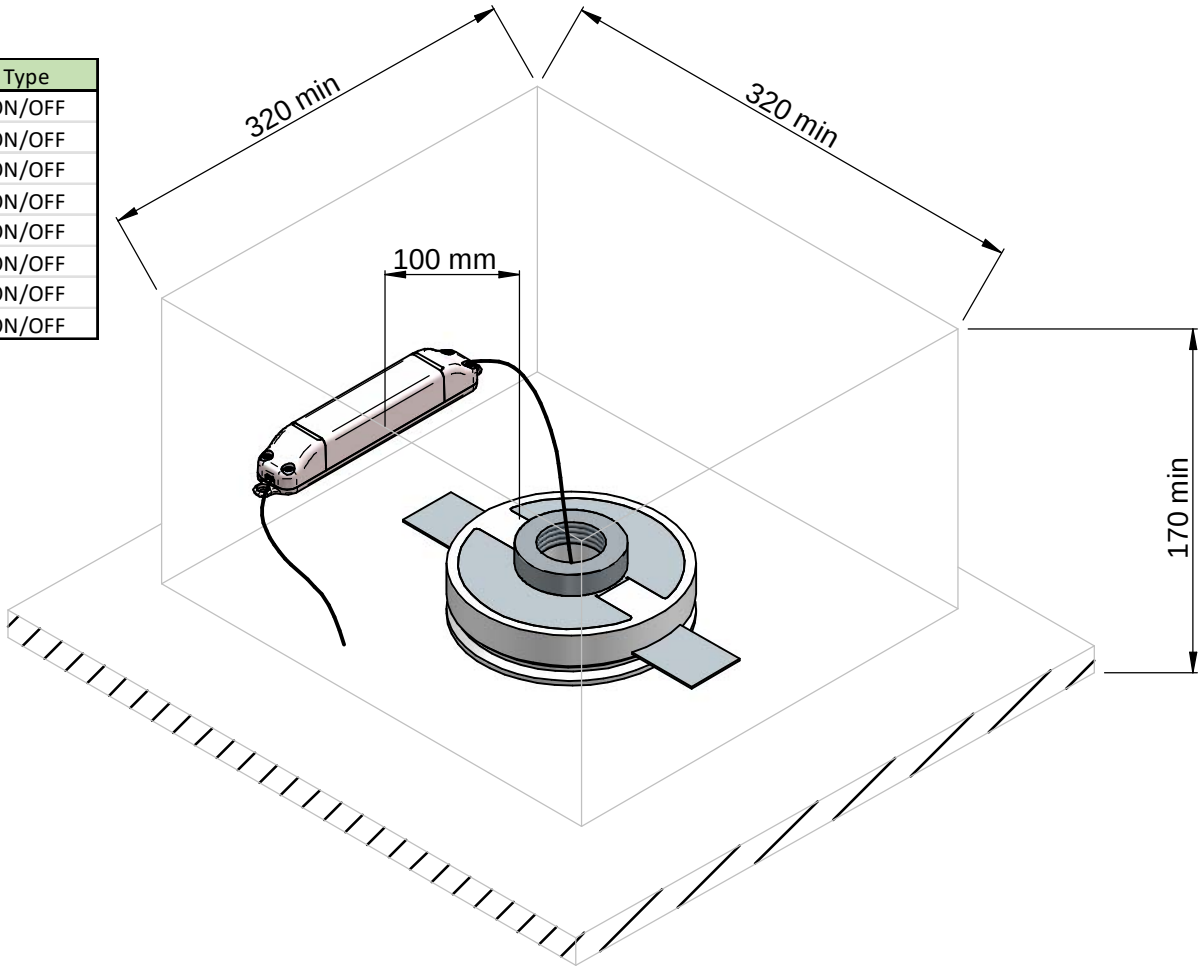

2

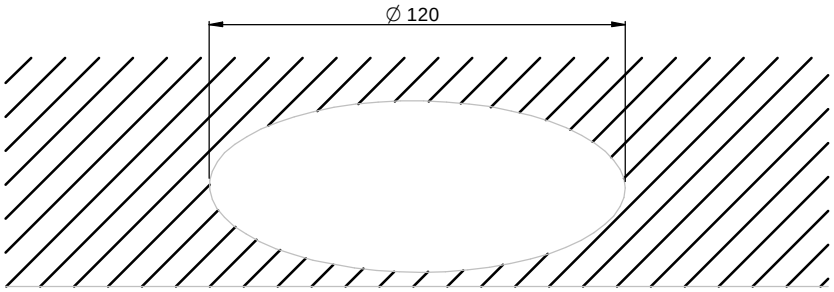

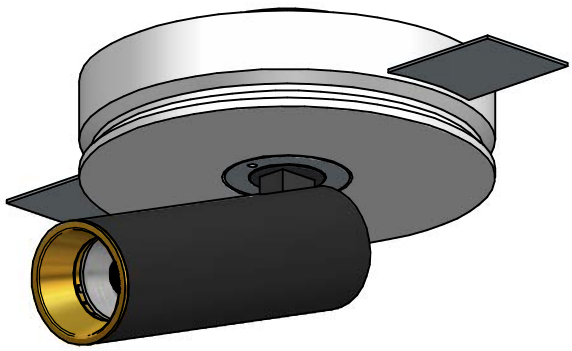

3

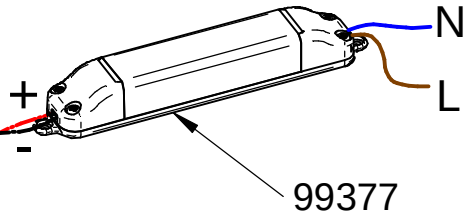

Code	Power
CA035AWHWFL	12W
CA035AWHMFL	12W
CA035AWHWMW	12W
CA035AWHMMW	12W
CA035ABBWFL	12W
CA035ABBMFL	12W
CA035ABBWMW	12W
CA035ABBMMW	12W

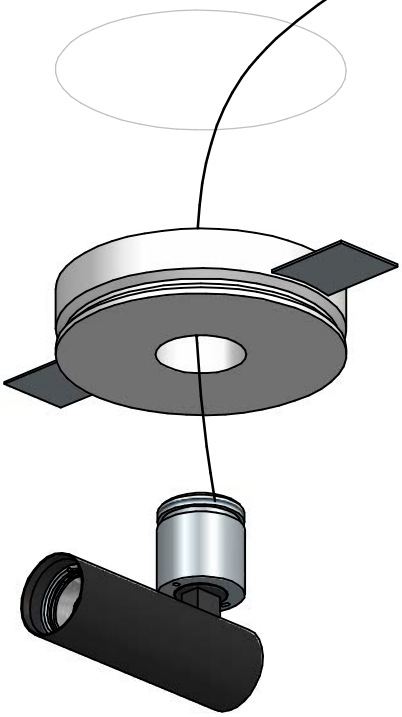

4

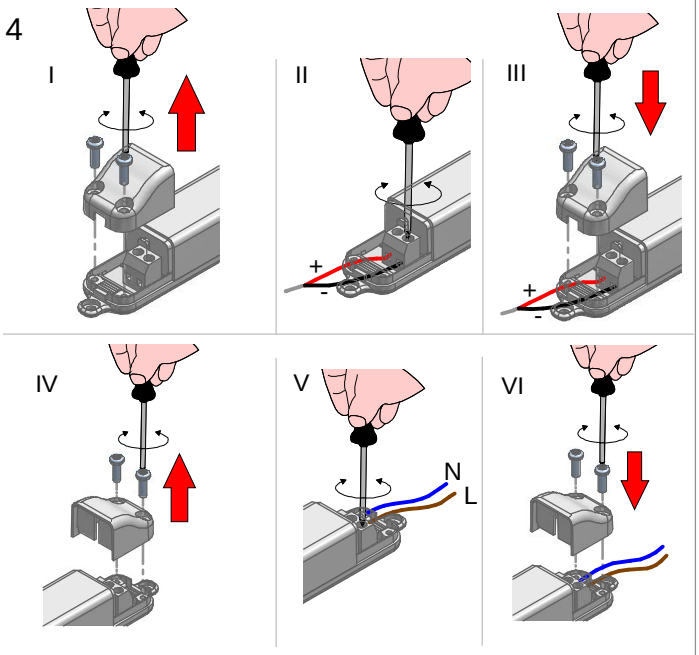

KIT0097 - MAX 9 LED (NOT INCLUDED)

Code	Code	Power
CA035JWHWFL	CA035JBBWFL	12W
CA035JWHMFL	CA035JBBMFL	12W
CA035JWHWMW	CA035JBBWMW	12W
CA035JWHMMW	CA035JBBMMW	12W

DALI

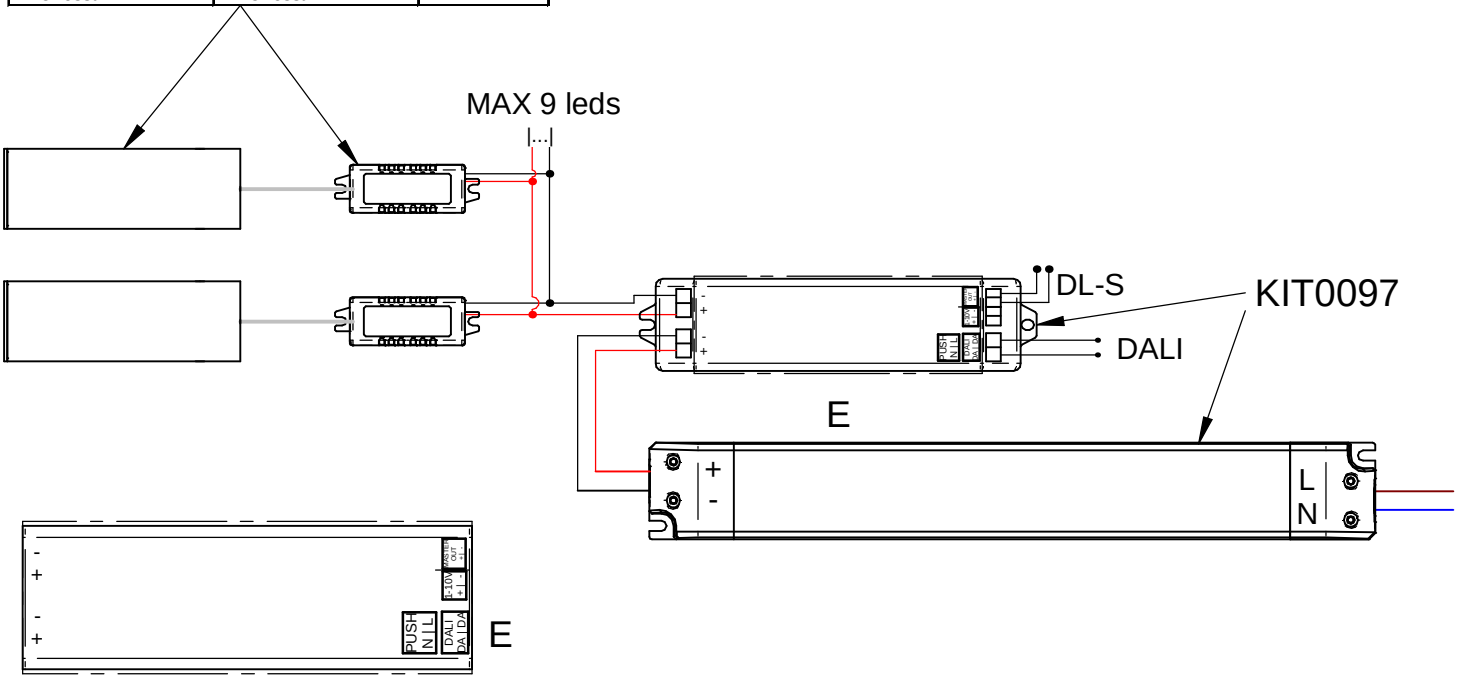

1-10V

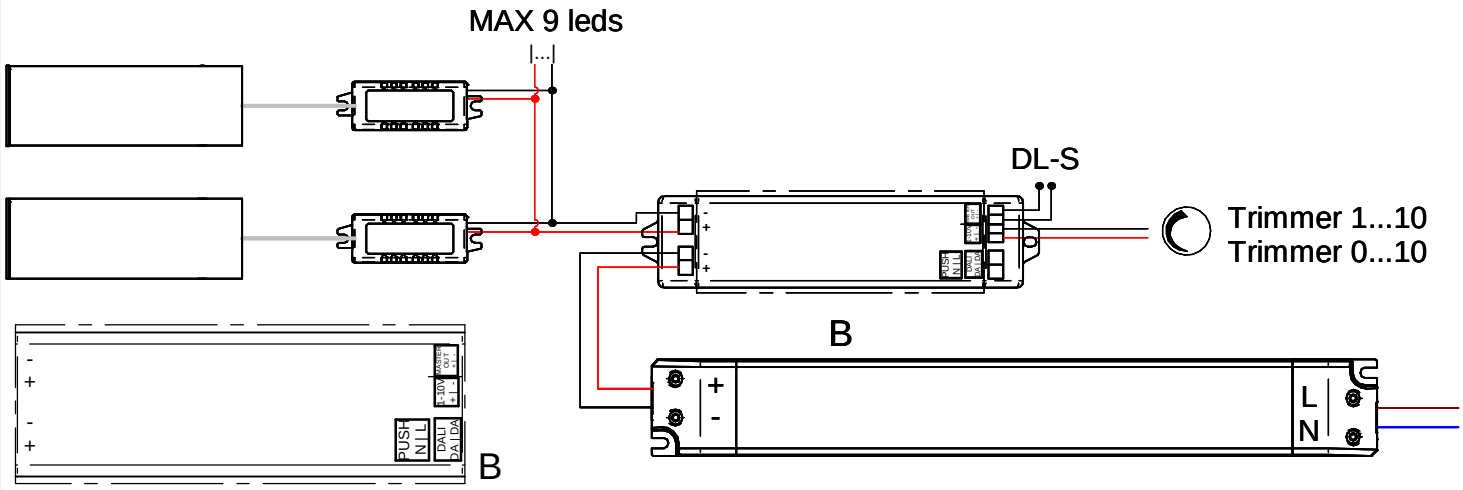
MAX 9 leds
DL-S
Trimmer 1...10
Trimmer 0...10
B
L
N
B

PUSH

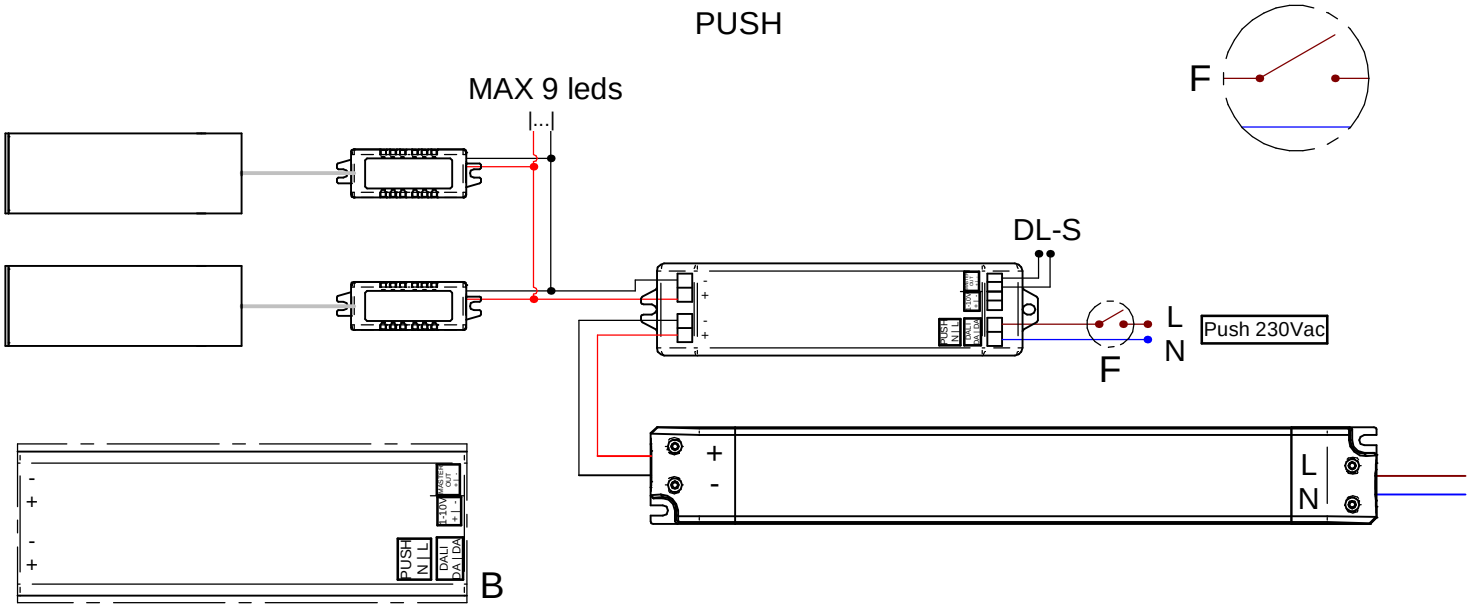
F
MAX 9 leds
DL-S
L
N
Push 230Vac
F
L
N
B

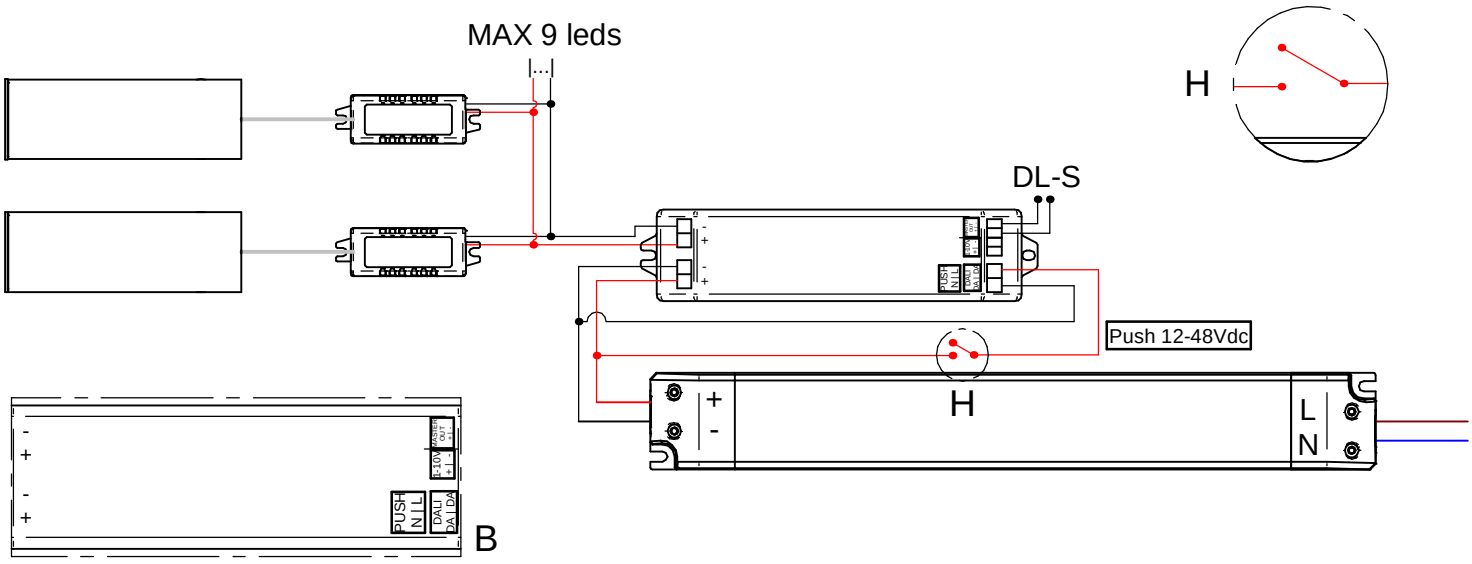
MAX 9 leds
H
DL-S
Push 12-48Vdc
H
L
N
B

5

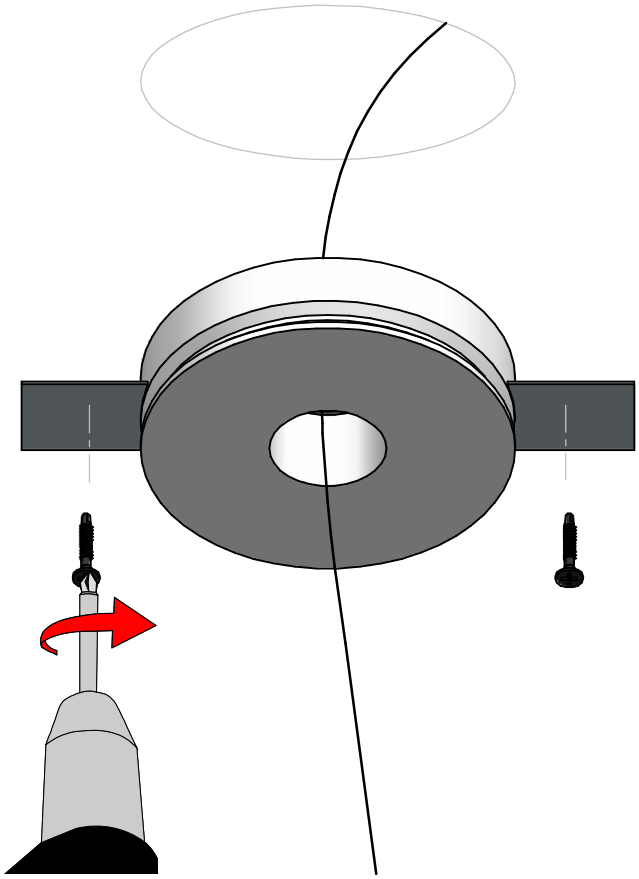

7

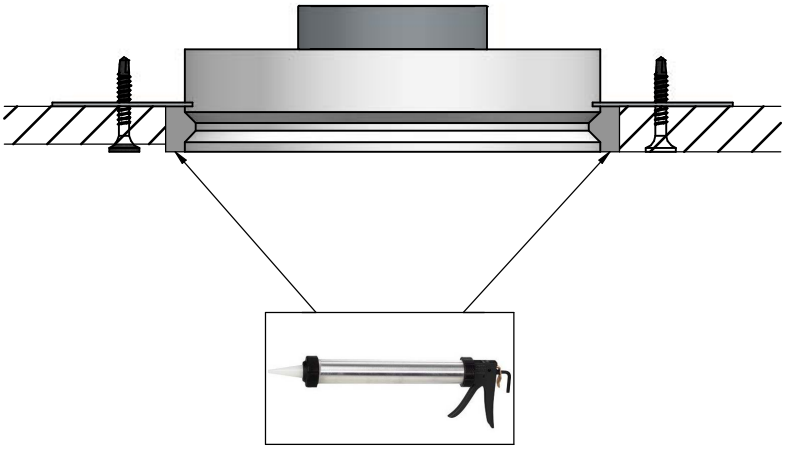

6

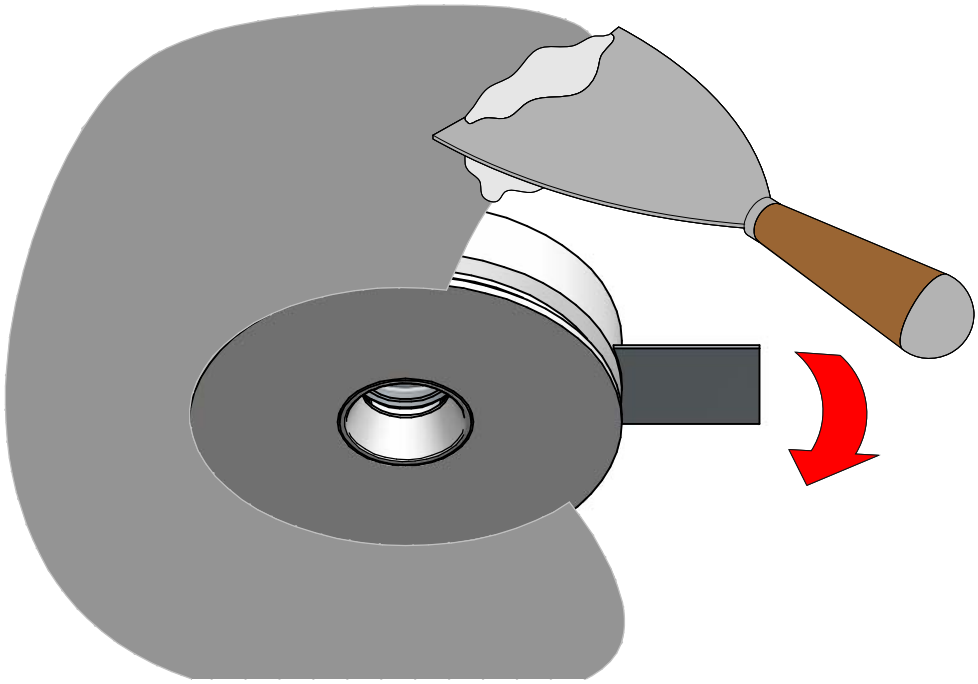

8

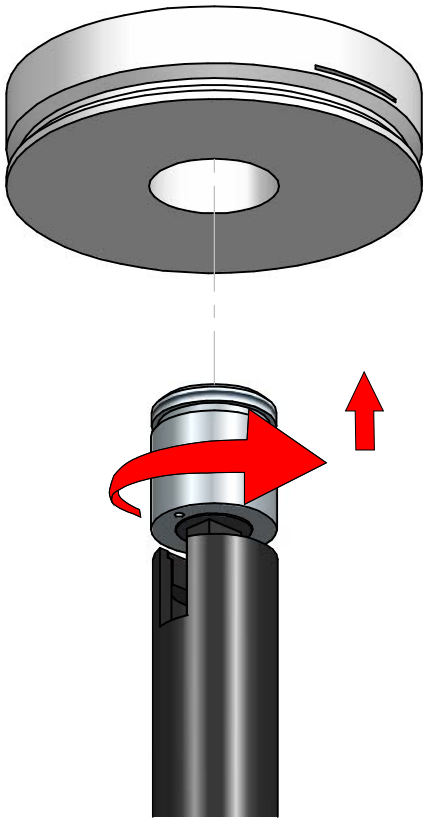

9

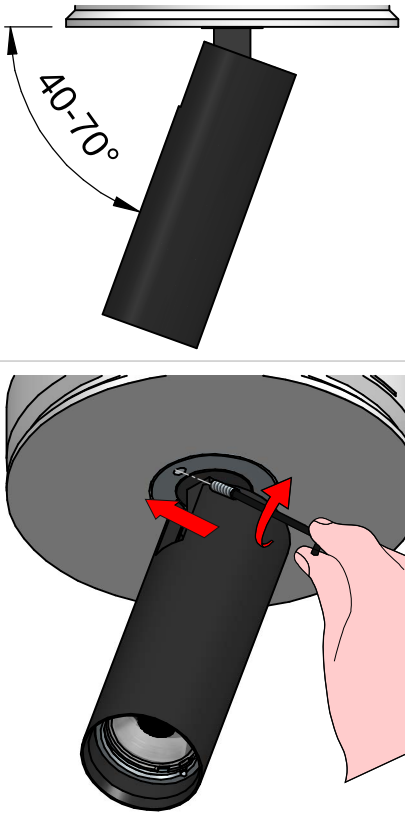

10

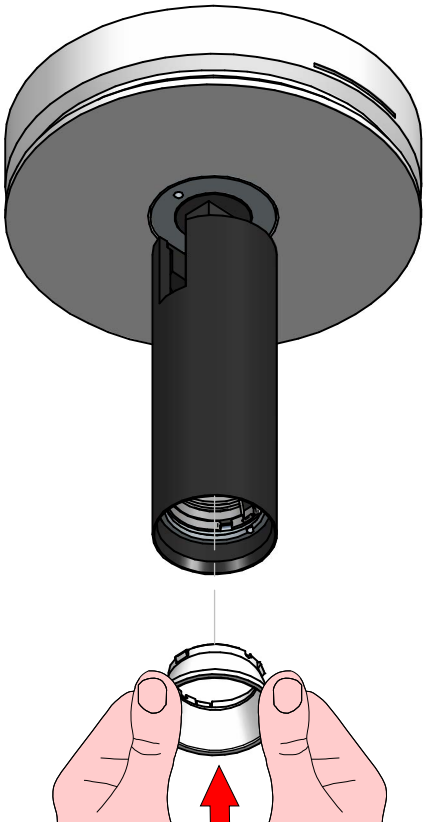

11

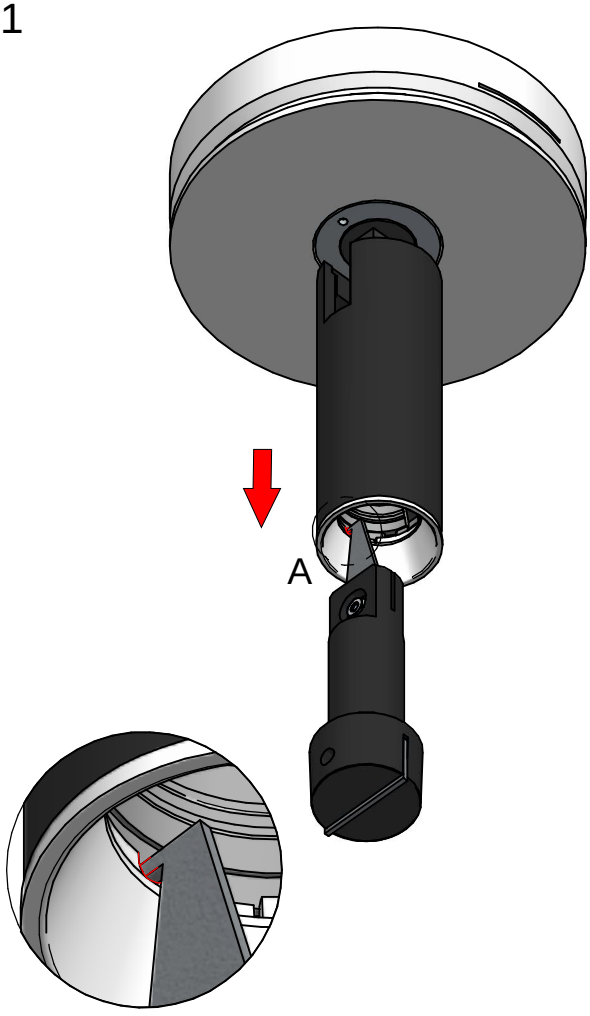

DETTAGLIO A

12

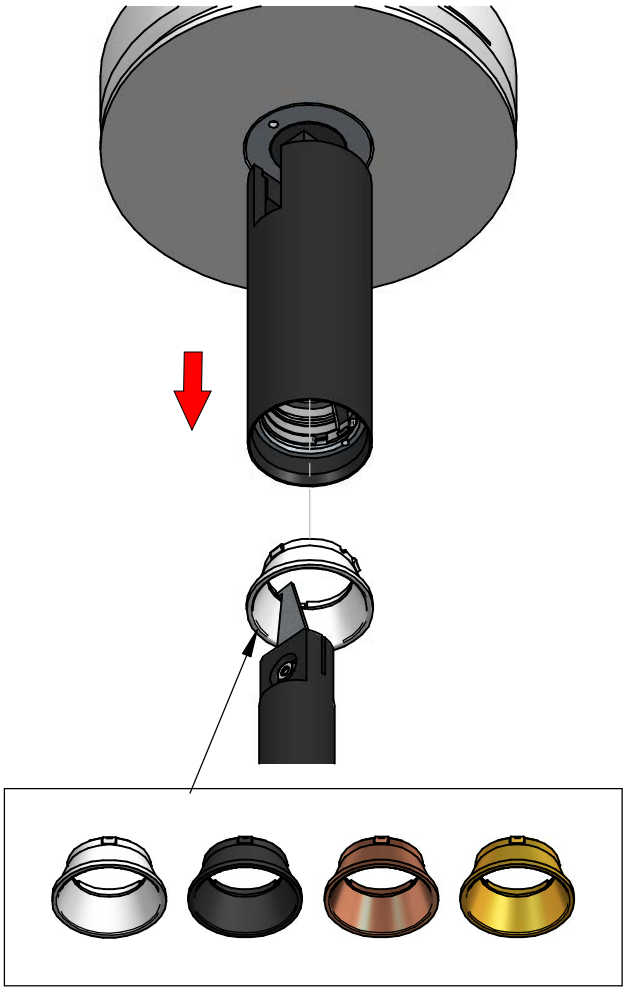

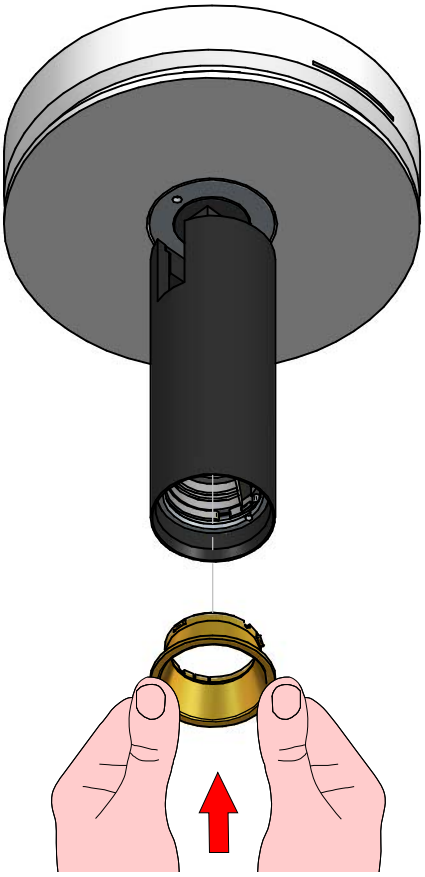

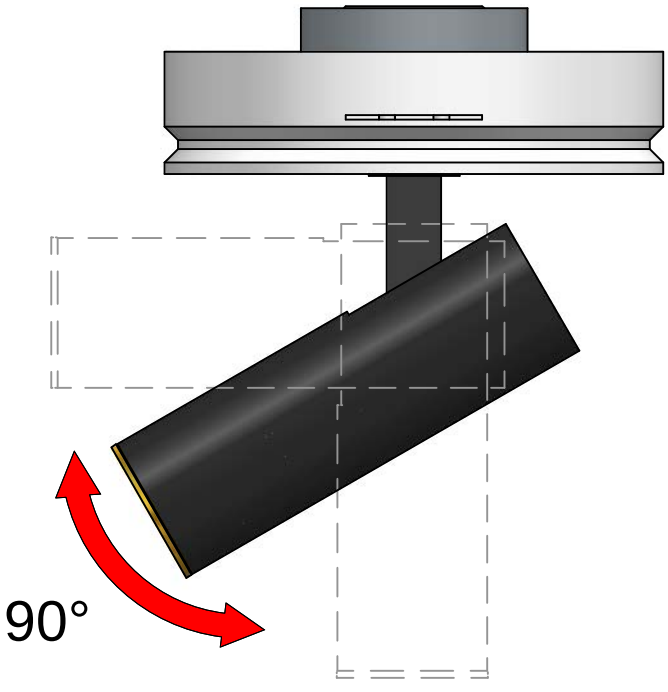

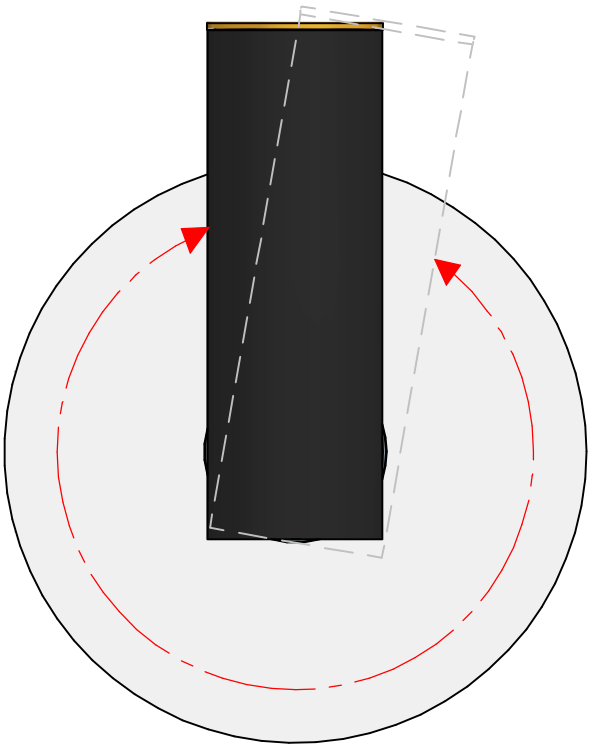

ISTRUZIONI PER IL LAVAGGIO DELL'APPARECCHIO D'ILLUMINAZIONE
LUMINAIRE CARE INSTRUCTIONS
ISTRUCCIONES PARA LIMPIAR LA LUMINARA
INSTRUCTIONS POUR LE LAVAGE DE L'APPAREIL D'ECLAIRAGE
ANLEITUNG ZUR REINIGUNG DES BELEUCHTUNGSGERATS

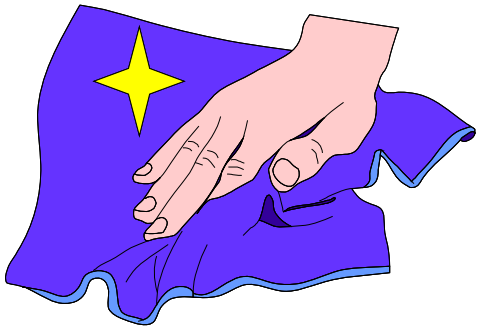



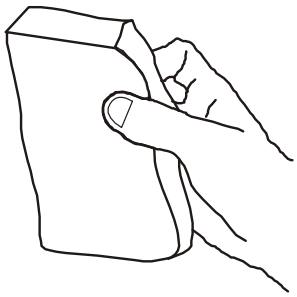

IT - ATTENZIONE!!!

Lavare la superficie del diffusore luce con panno umido, utilizzando solo acqua e sapone neutro.

EN - WARNING!!!

Wipe clean with a cloth damped in water with neutral detergent.

ES - ATENCION!!!

Limpie la superficie del difusor con un pano humedecido con agua y jabon neutro.

FR - ATTENTION!!!

Laver la surface du diffuseur de lumiere a l'aide d'un chiffon humide et en utlisant seulement de l'eau et du savon neutre.

DE - ACHTUNG!!!

Die oberflache vom lampenschirm mit einem feuchten lappen reinigen. De lappen mit wasser und neutralseife befeuchten.

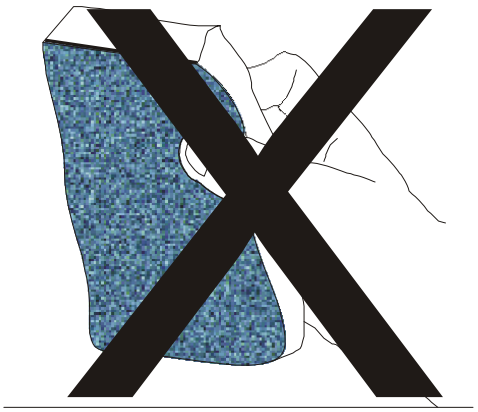



IT - ATTENZIONE!!!

Non utilizzare panni abrasivi e/o solventi.

EN - WARNING!!!

Avoiding the use of chemical solvents and/or abrasive cloths.

ES - ATENCION!!!

No utilizar panos abrasivos y solventes.

FR - ATTENTION!!!

Ne pas utiliser de chiffons abrasifs ou de dissolvants.

DE - ACHTUNG!!!

Abschleifende tuche und/oder losungmittel nicht benutzen.