14244
KIT INDOOR
rev:00

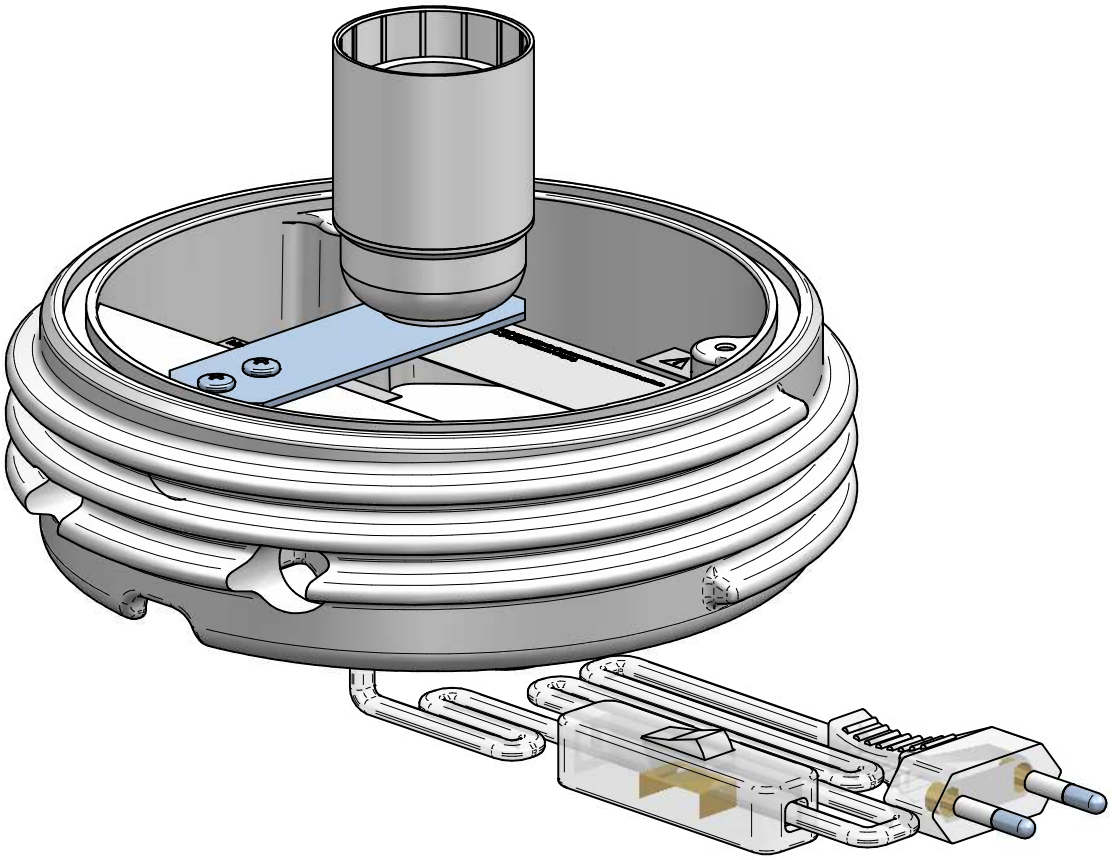

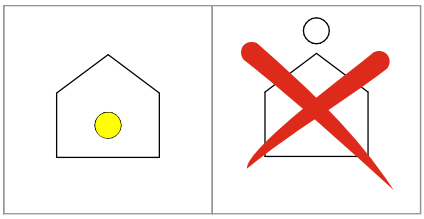

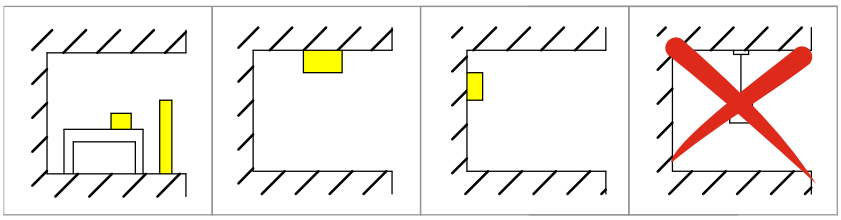

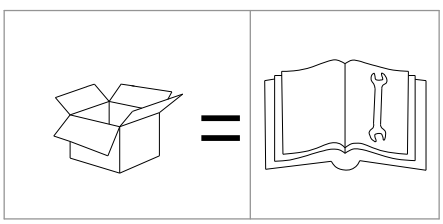

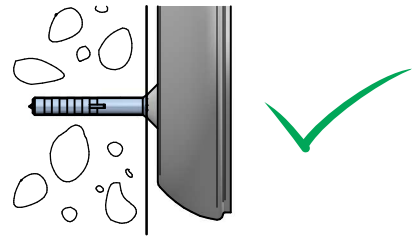

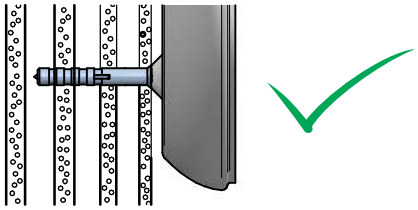

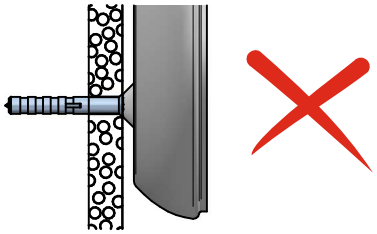

14244
KIT INDOOR
rev:00

1

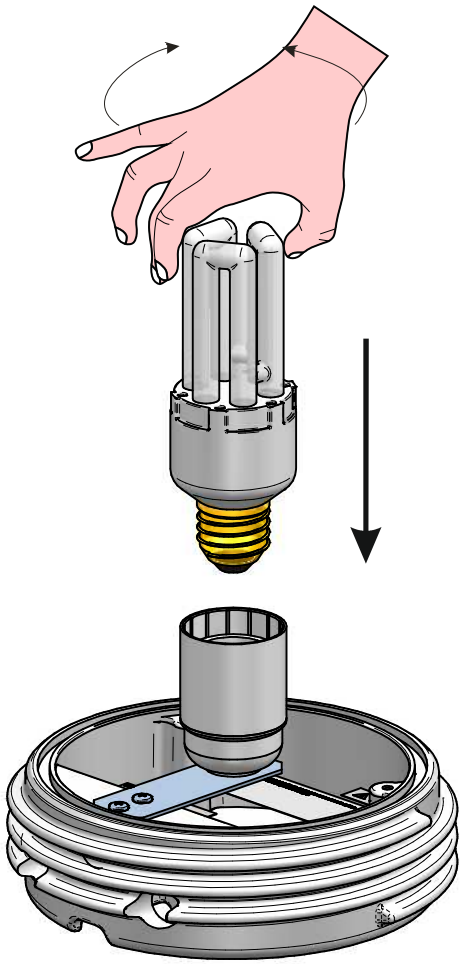

2

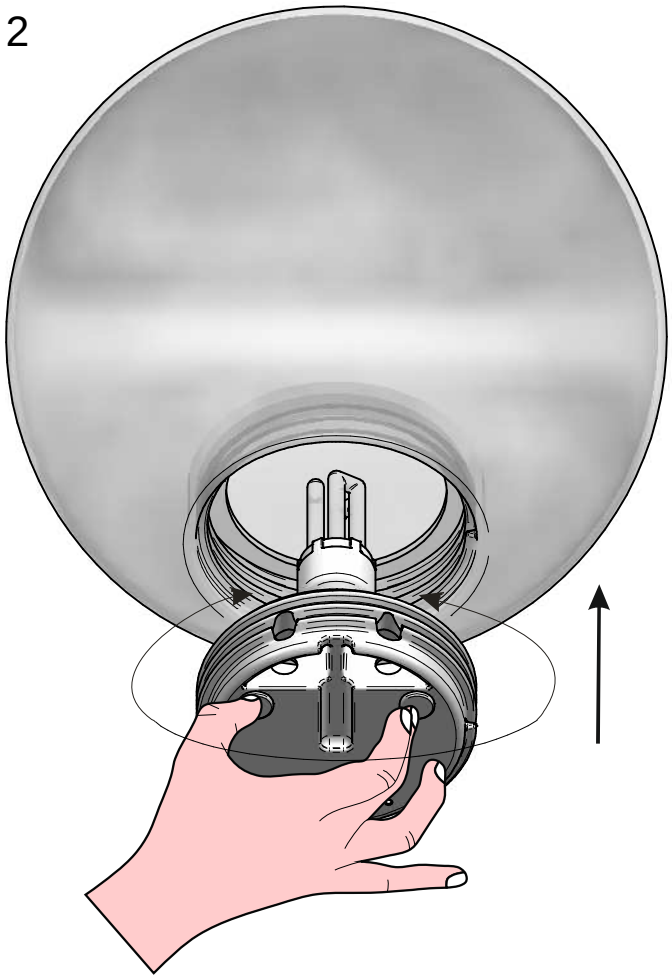

3

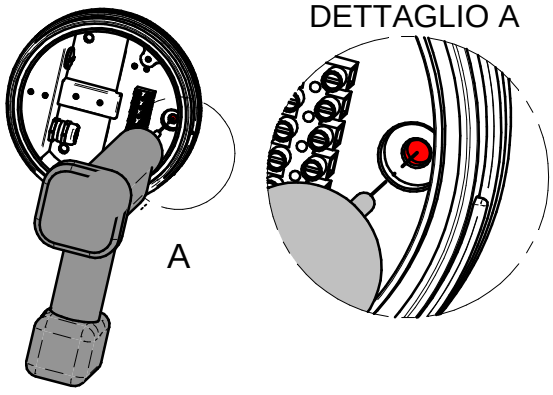

4

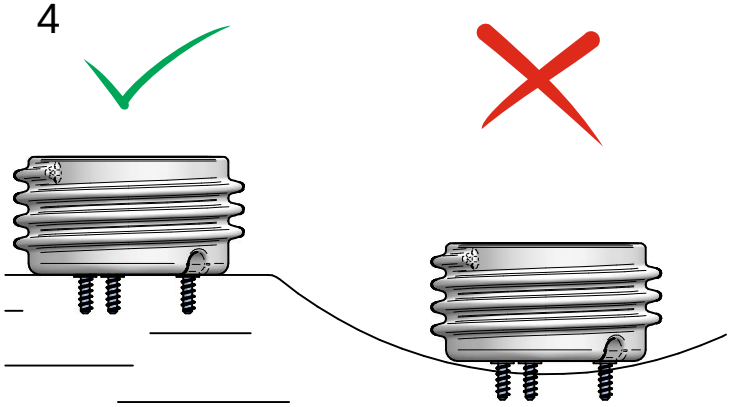

5

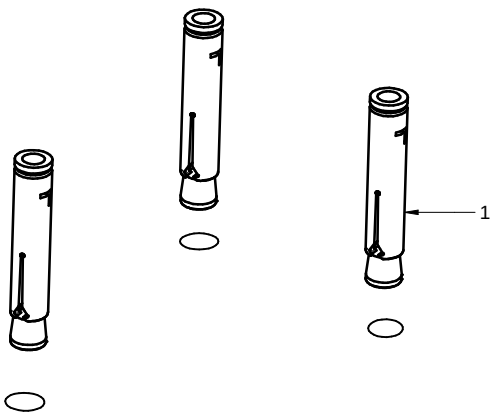

NOT INCLUDED

1- tasselli TOP INOX A4 M6
2- vite TCEI A4 M6
3- rondella piana per foro M6
4- O-ring

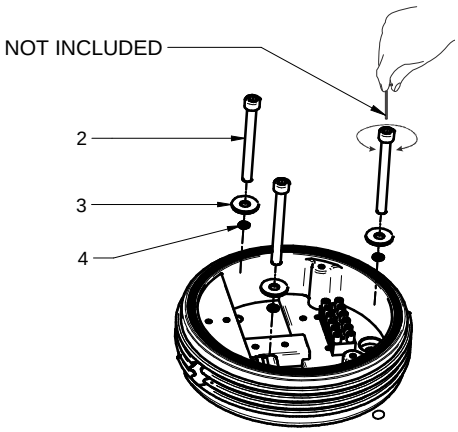

14244
KIT INDOOR
rev:00

linea light Decorative

	ϕ380mm	ϕ550mm	ϕ750mm
OH! 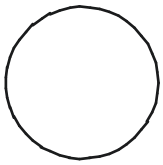	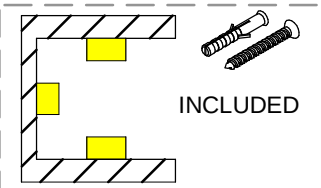 INCLUDED 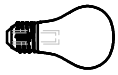 42 W Energy Saver Led lamp 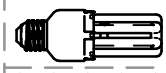 20 W Low Consumption	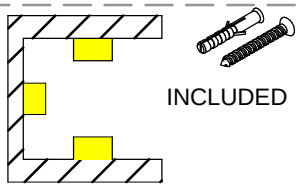 INCLUDED 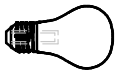 42 W Energy Saver Led lamp 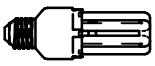 30 W Low Consumption	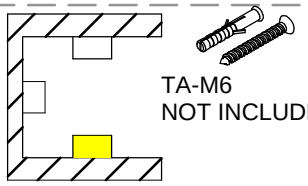 TA-M6 NOT INCLUDED 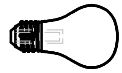 52 W Energy Saver Led lamp 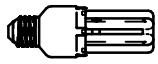 30 W Low Consumption
OH! SMASH 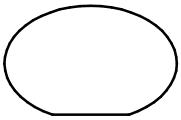	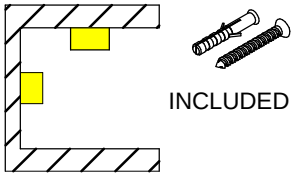 INCLUDED 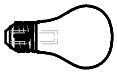 30 W Energy Saver Led lamp 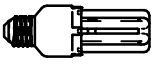 14 W Low Consumption	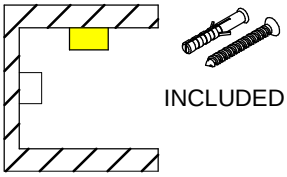 INCLUDED 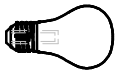 46 W Energy Saver Led lamp 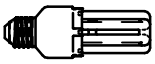 20 W Low Consumption	
OHPS  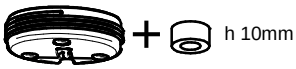 h 10mm		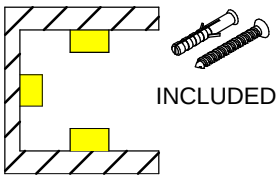 INCLUDED 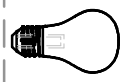 28 W Energy Saver Led lamp 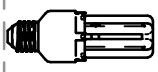 14 W Low Consumption	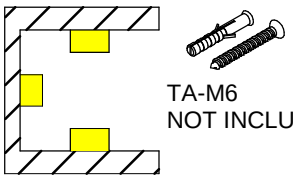 TA-M6 NOT INCLUDED 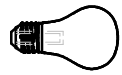 42 W Energy Saver Led lamp 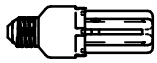 20 W Low Consumption

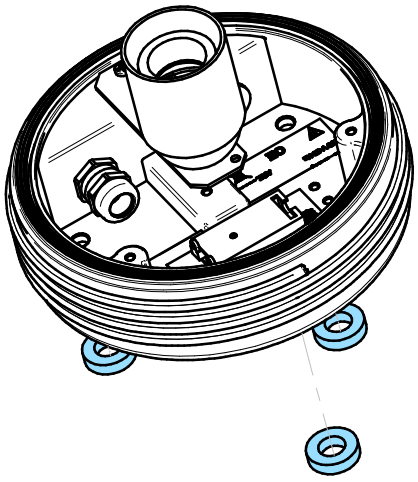

COMPATIBLE ARTICLE

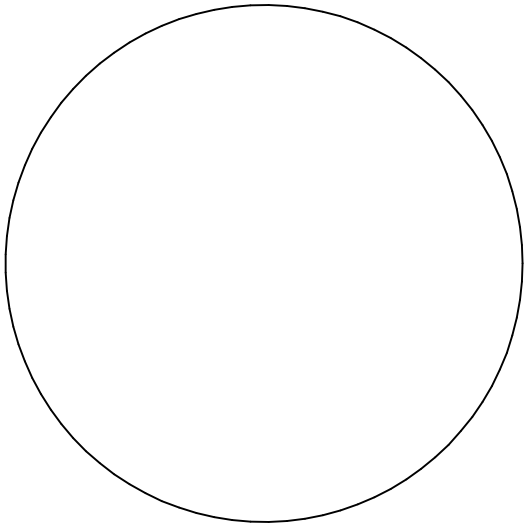

OH!

12102
12104
12106

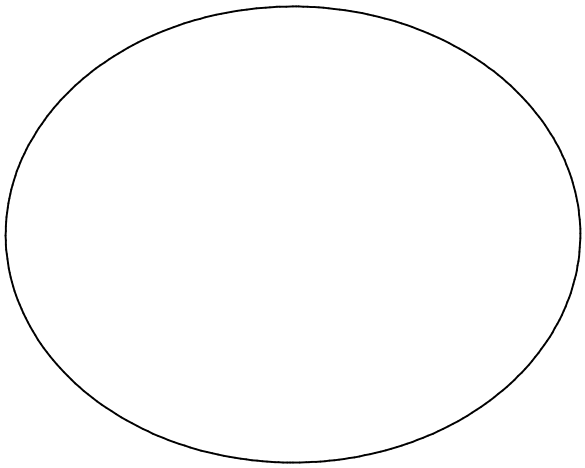

OH! SMASH

12215
12218

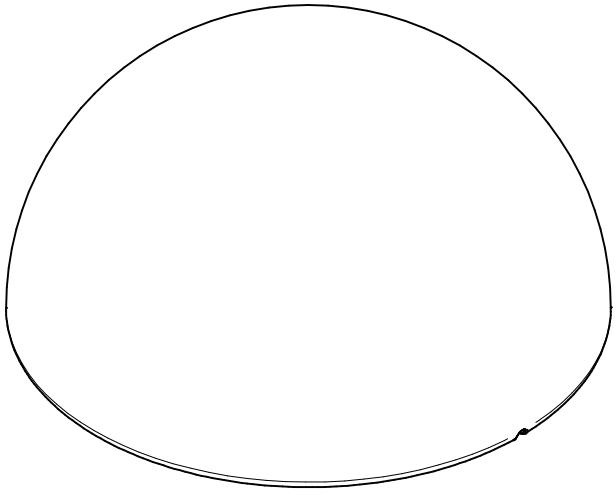

OHPS

12380
12381