14237
KIT INDOOR
rev:00

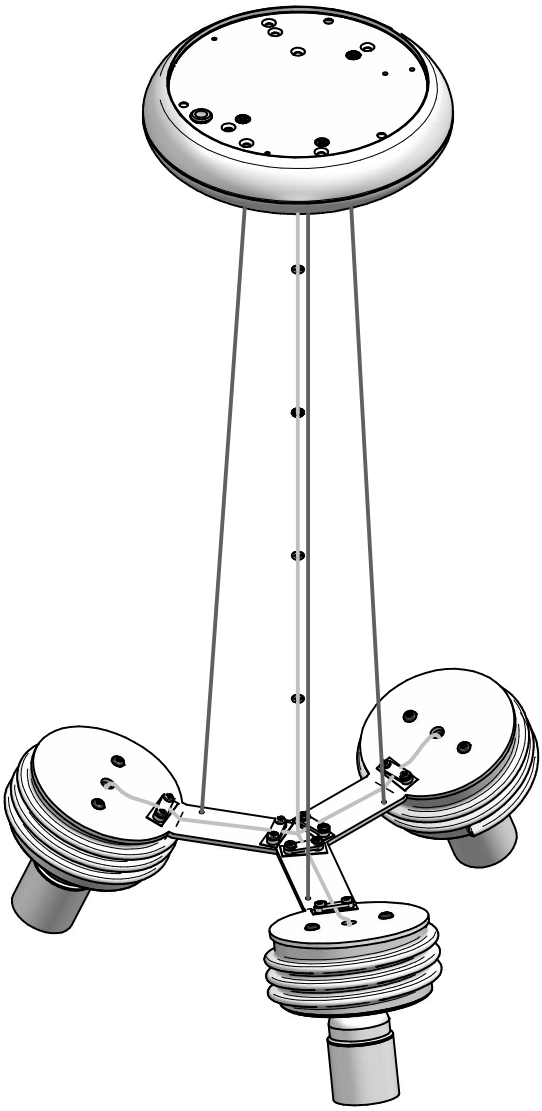

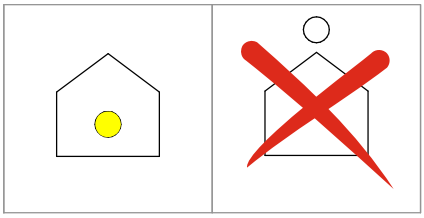

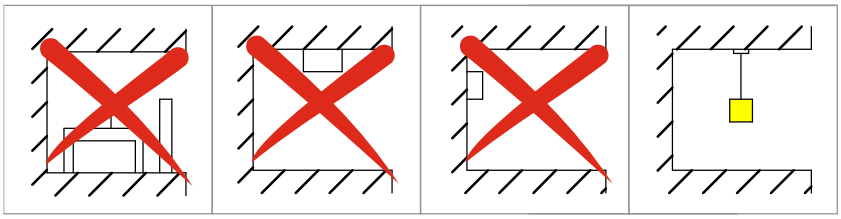

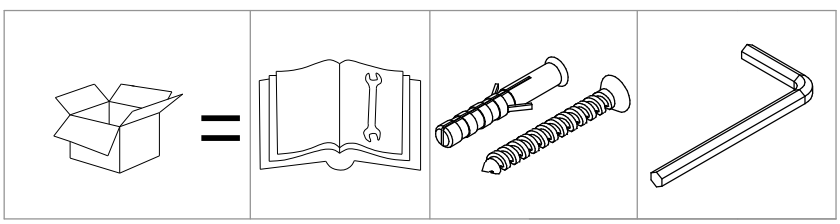

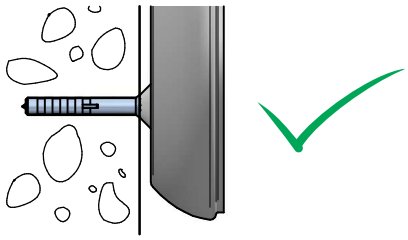

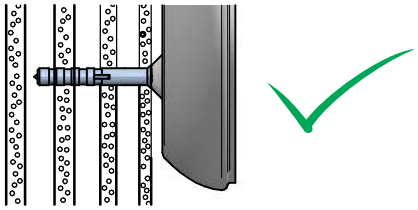

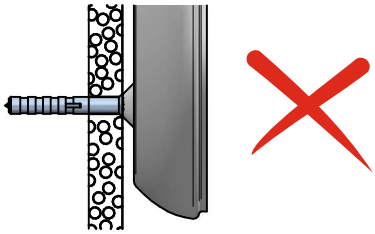

1

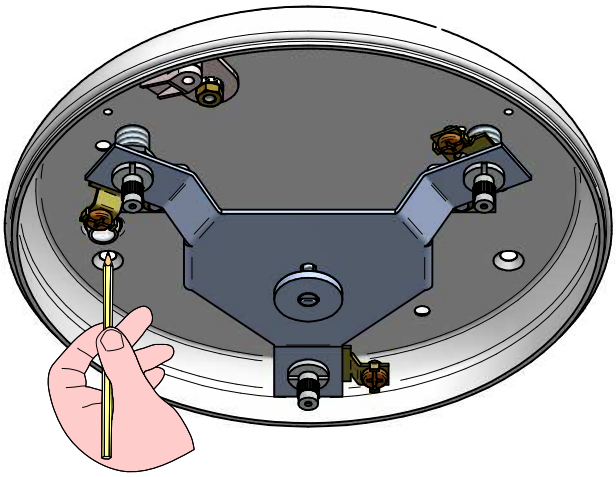

2

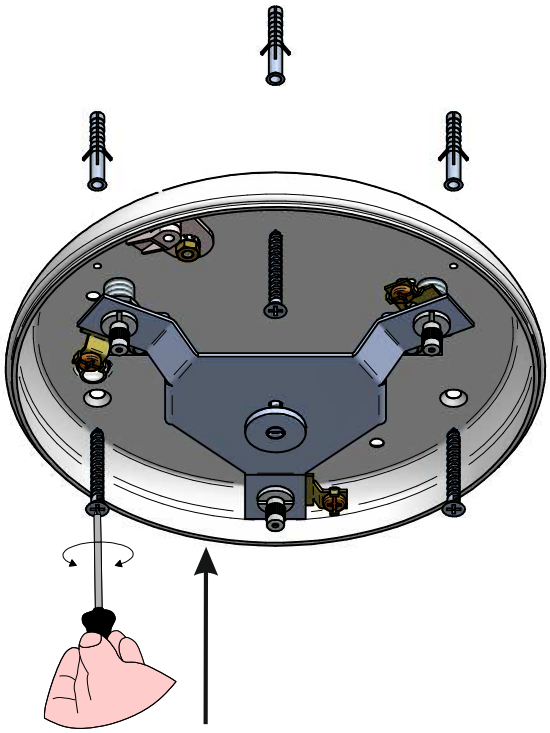

3

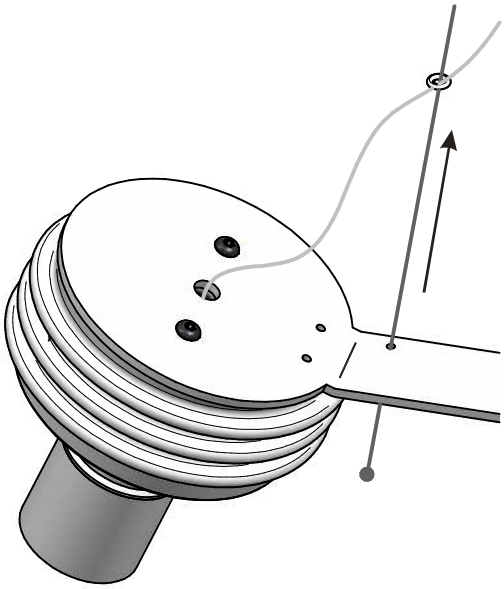

4

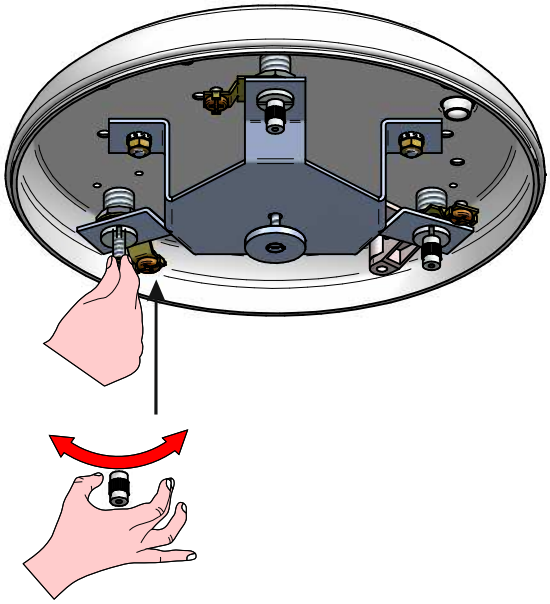

5

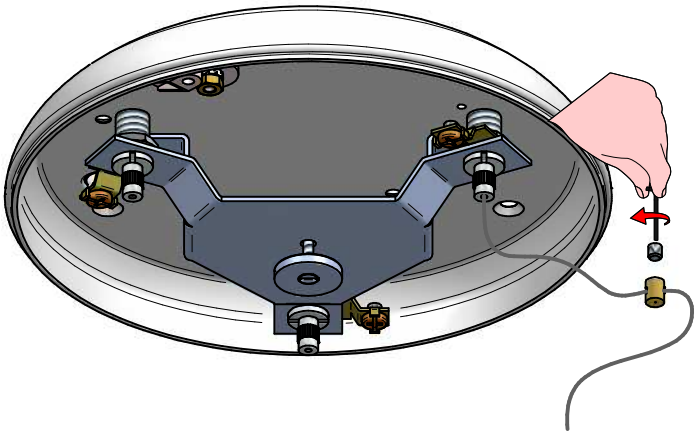

6

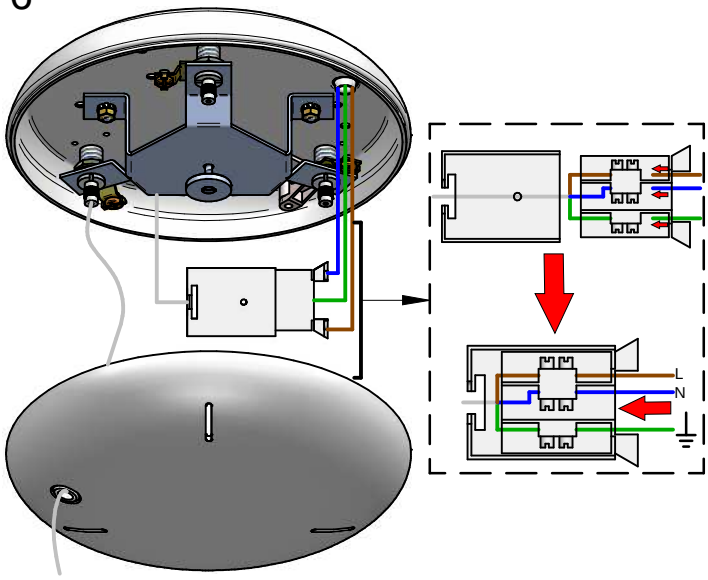

7

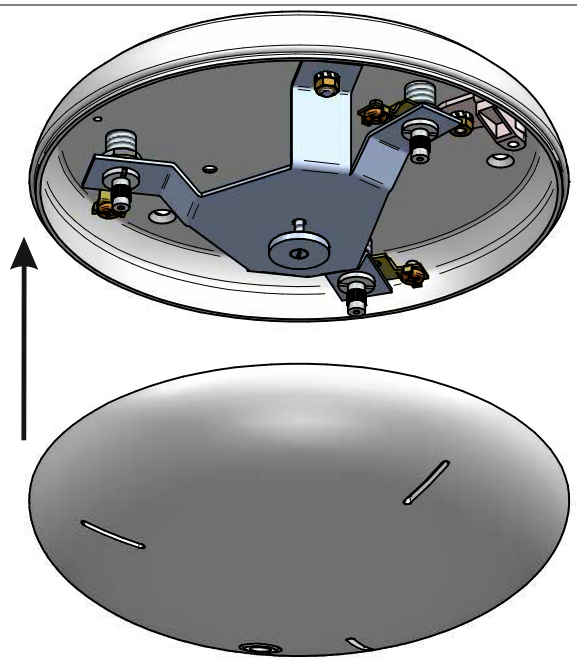

8

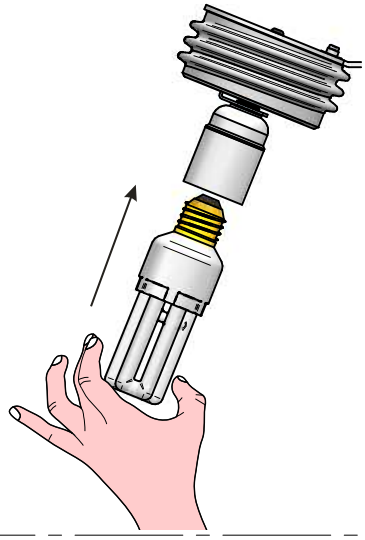

9

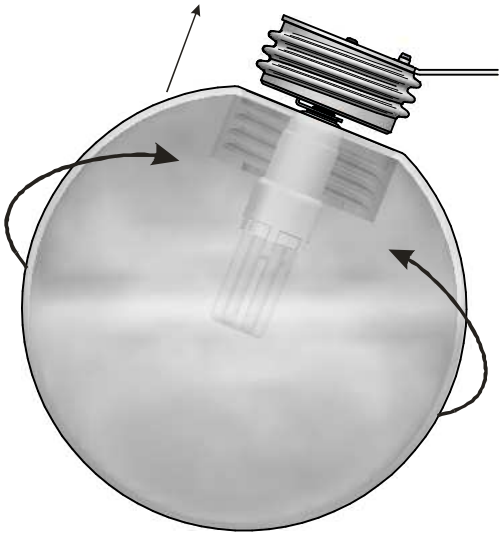

COMPATIBLE ARTICLE

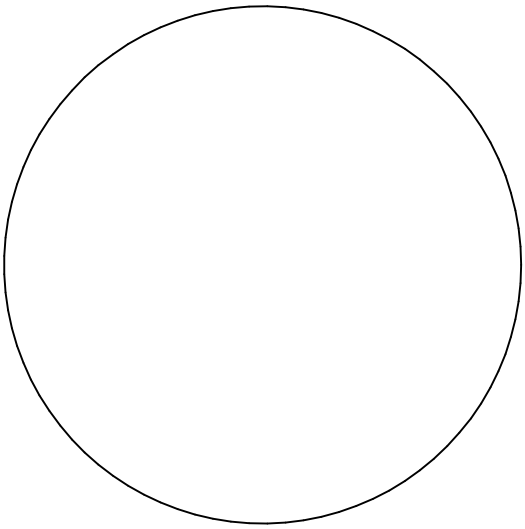

OH!

12220

14238
KIT INDOOR
rev:00

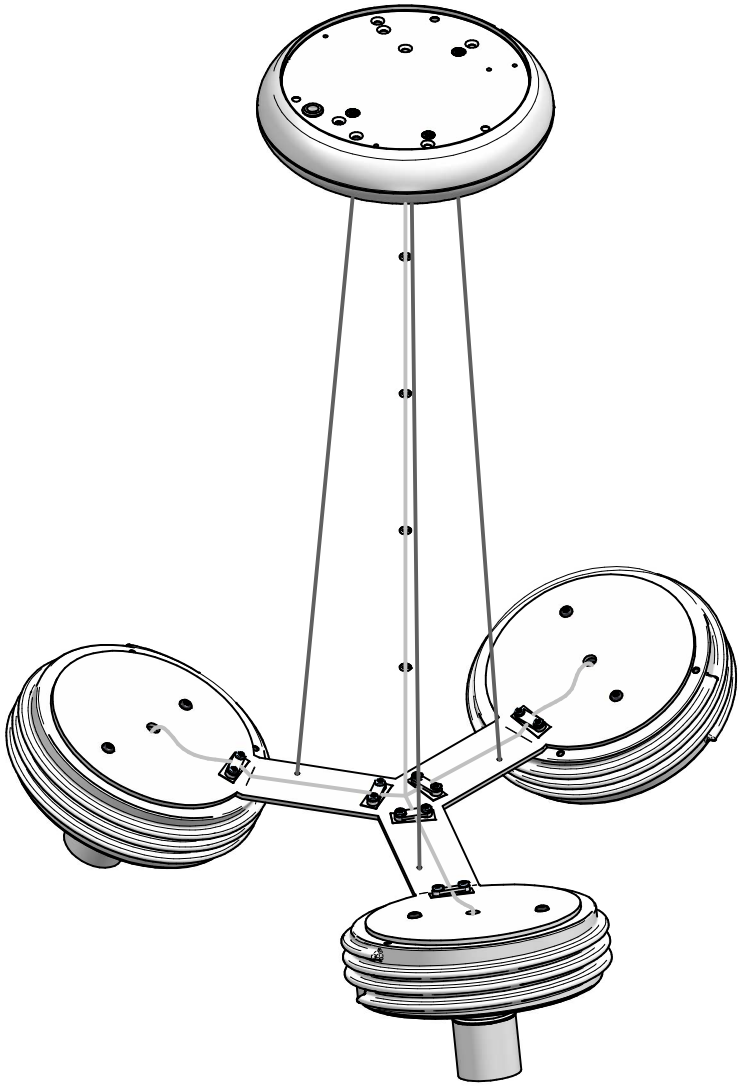

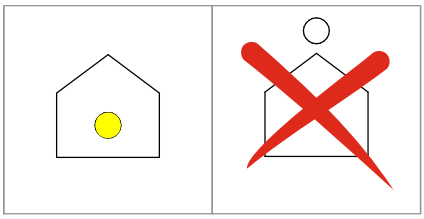

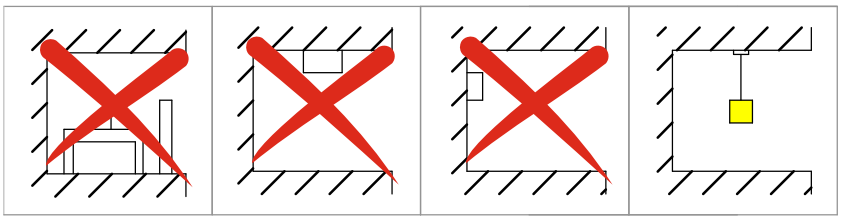

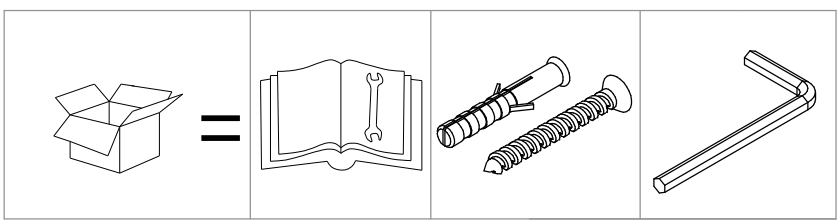

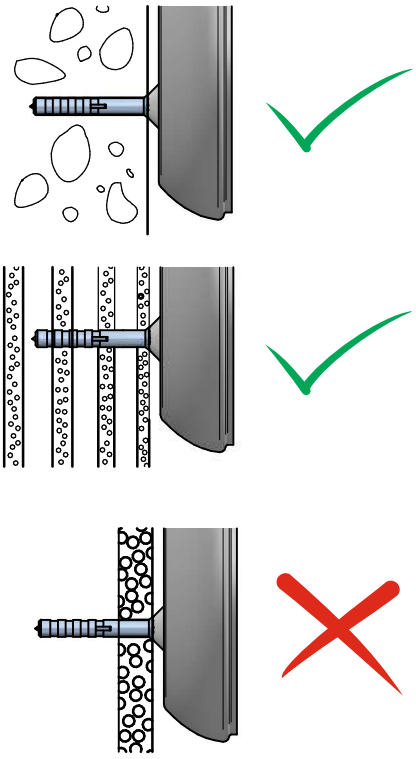

14238
KIT INDOOR
rev:00

1

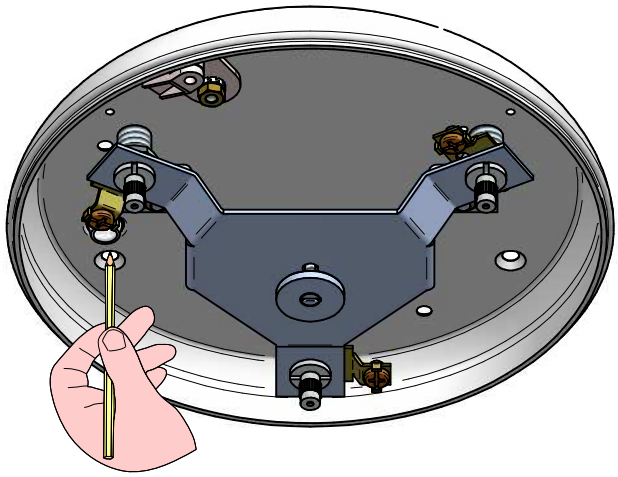

2

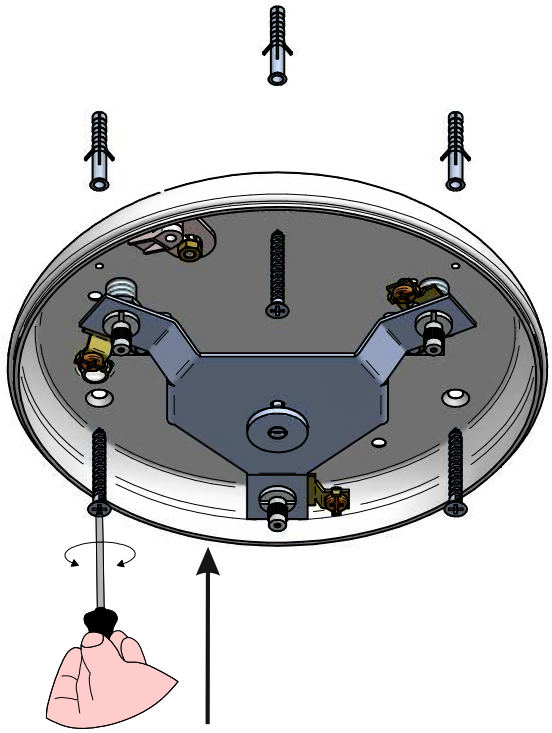

3

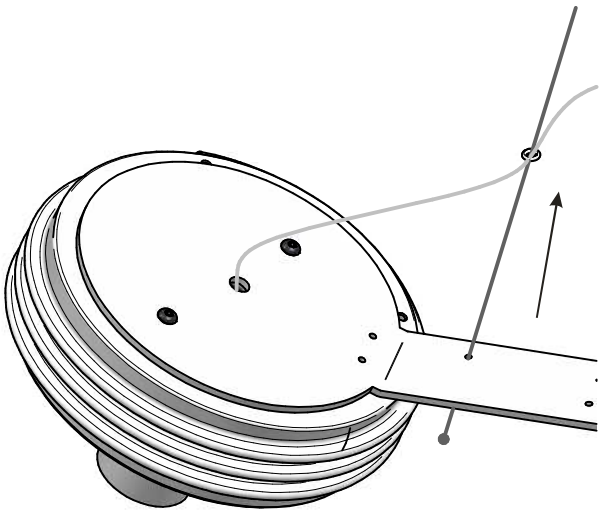

4

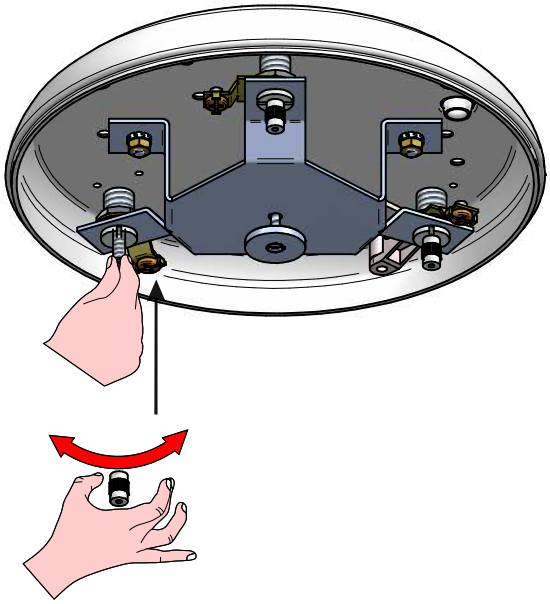

5

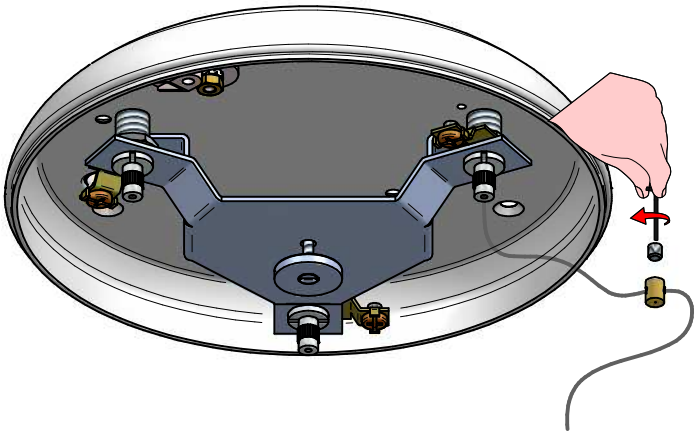

6

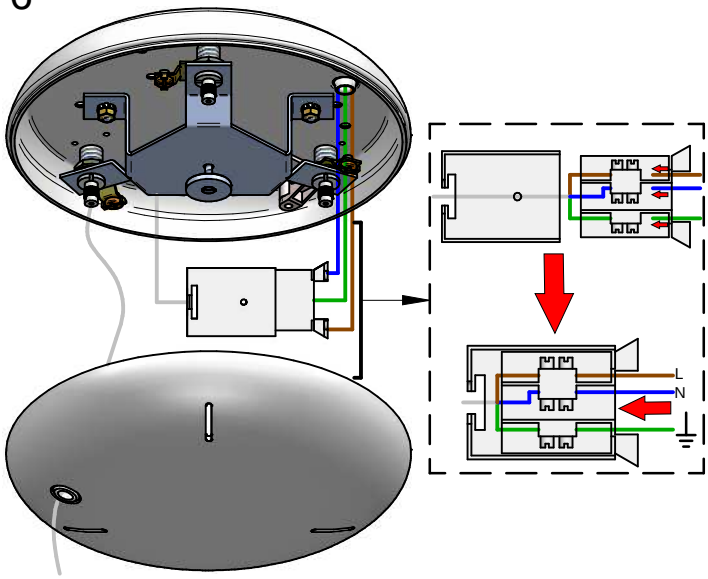

7

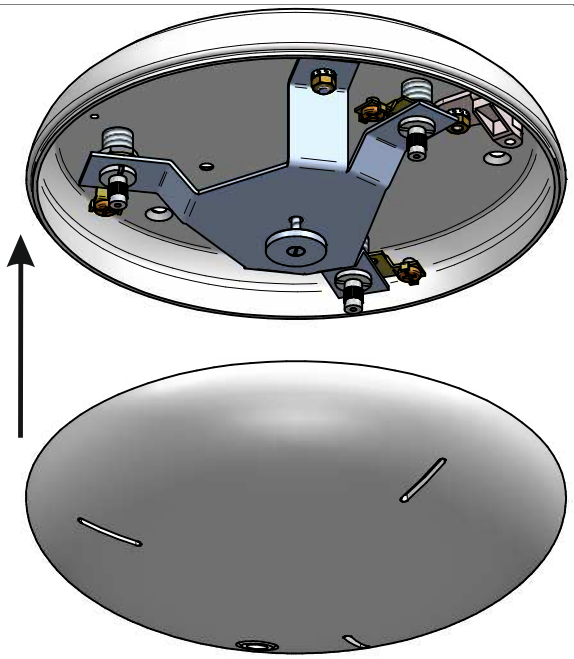

8

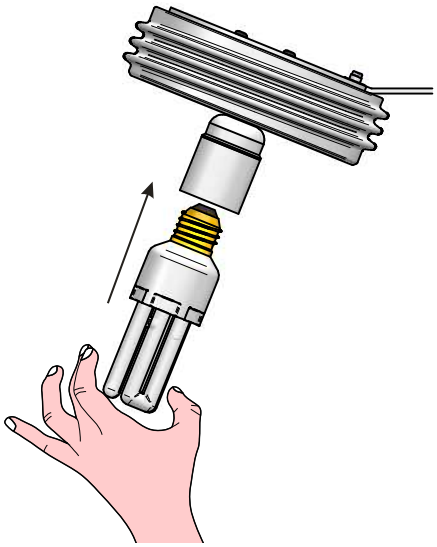

9

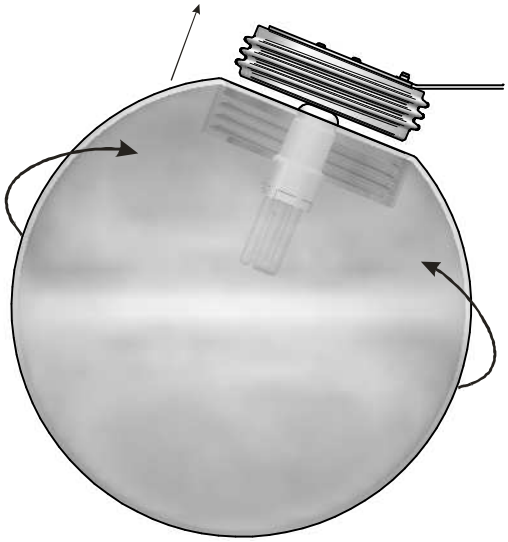

COMPATIBLE ARTICLE

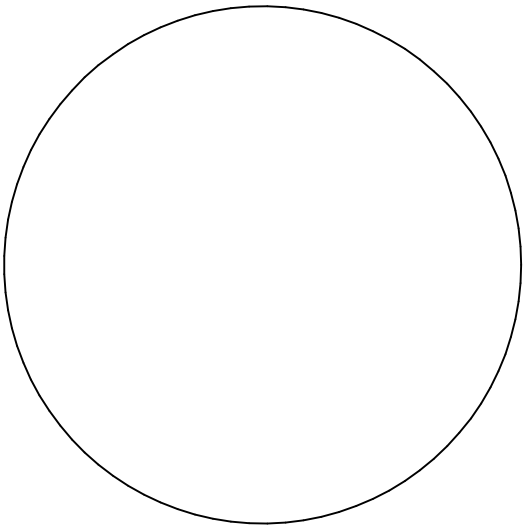

OH!

12221

14239
KIT INDOOR
rev:00

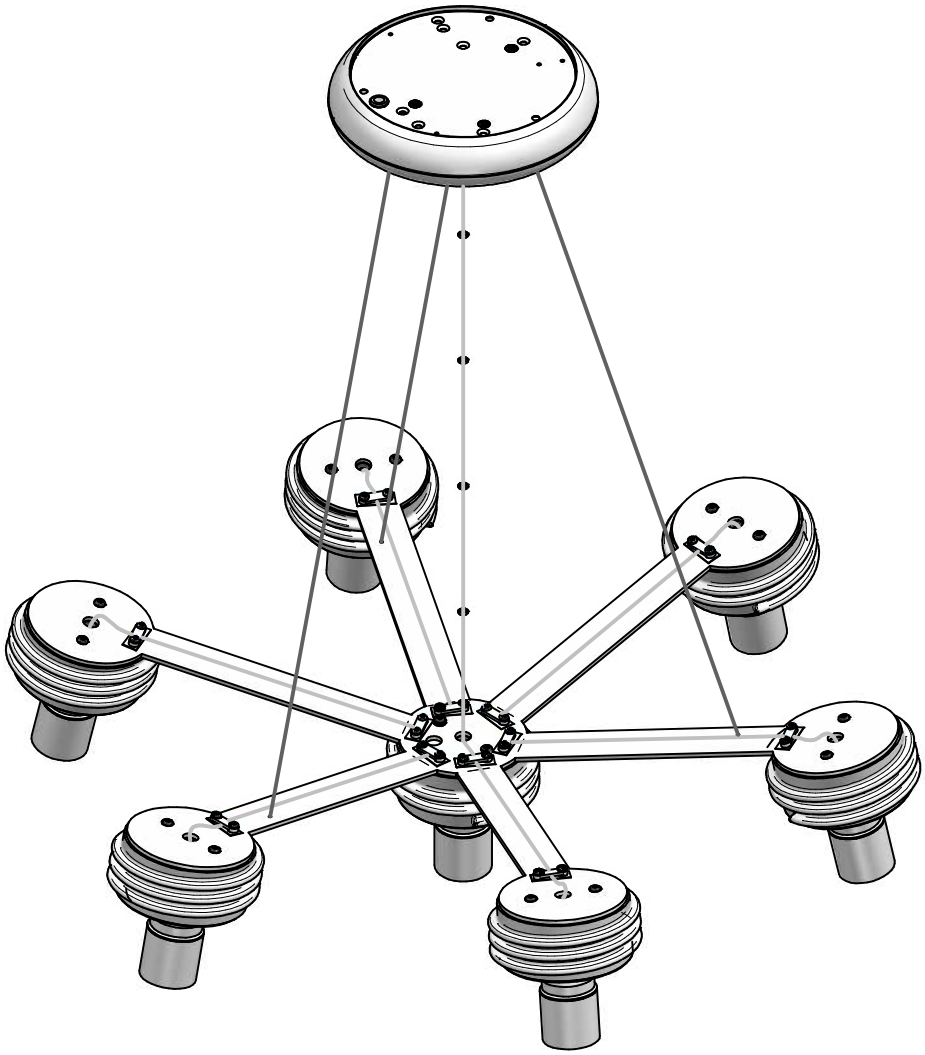

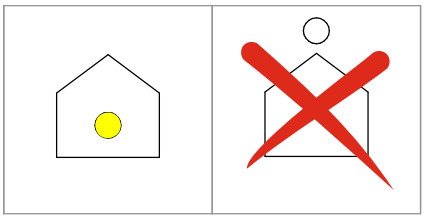

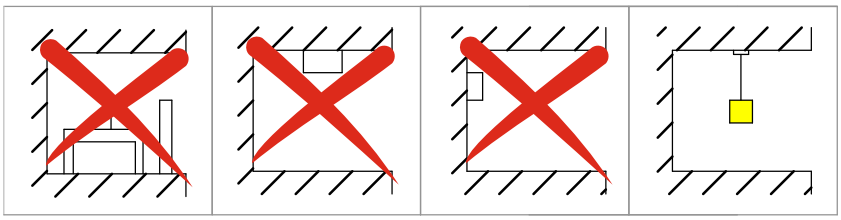

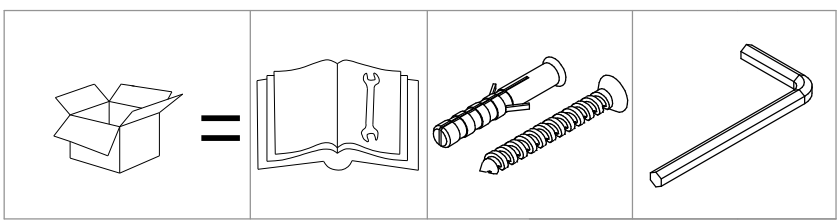

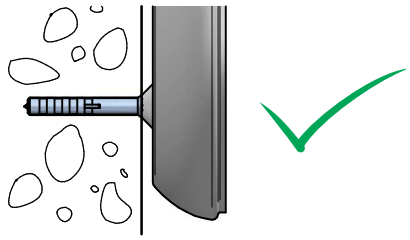

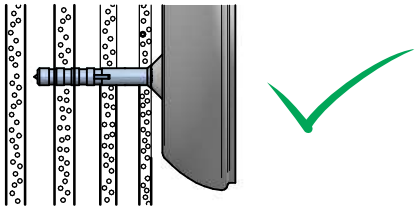

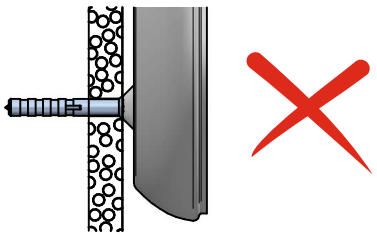

14239
KIT INDOOR
rev:00

1

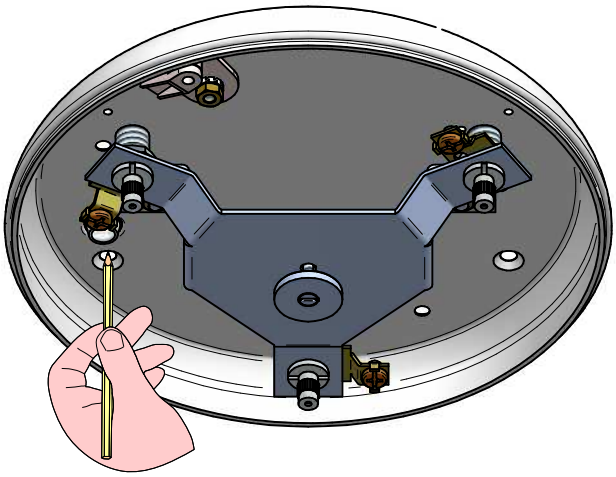

2

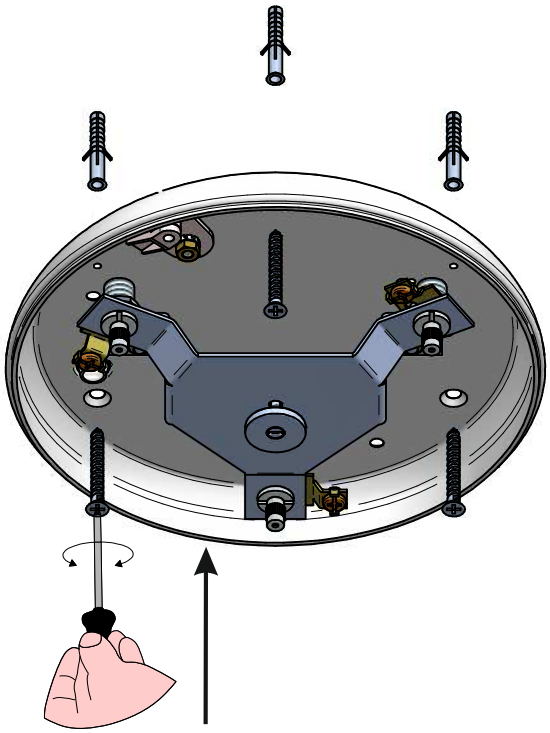

3

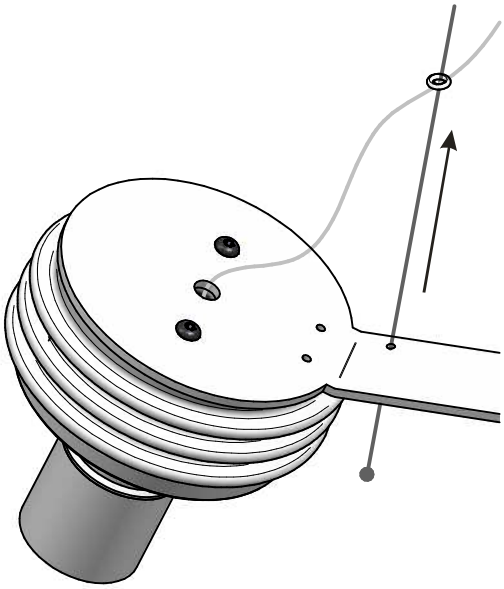

4

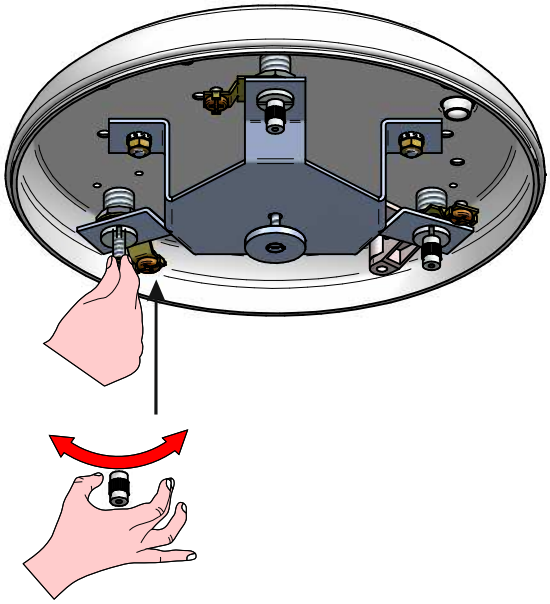

5

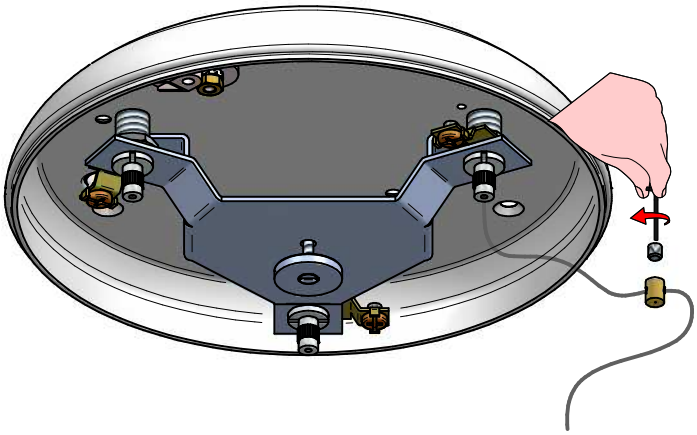

6

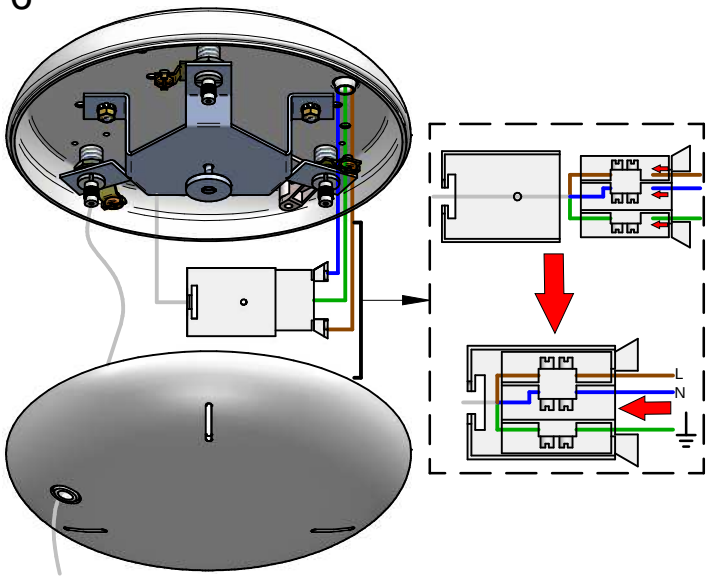

7

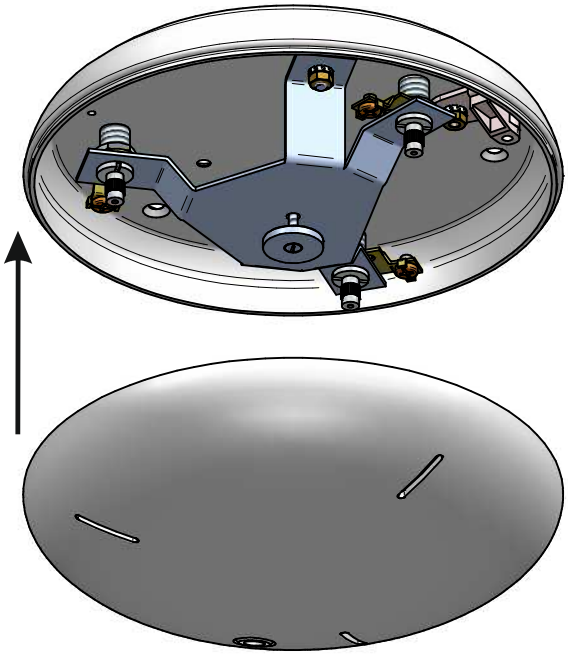

8

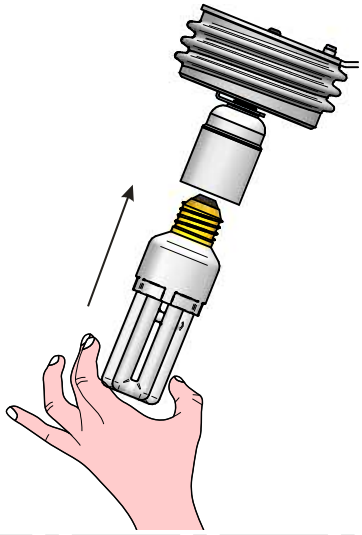

9

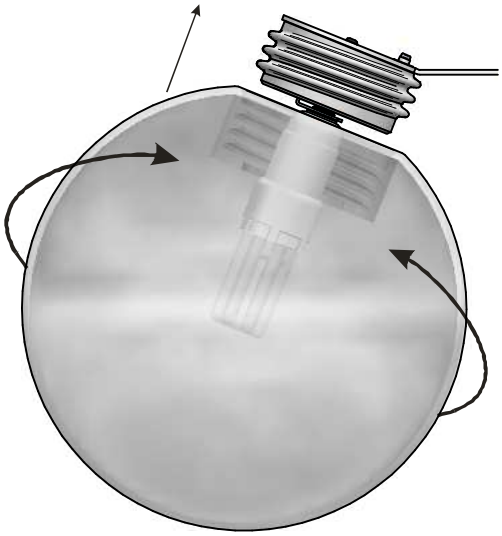

COMPATIBLE ARTICLE

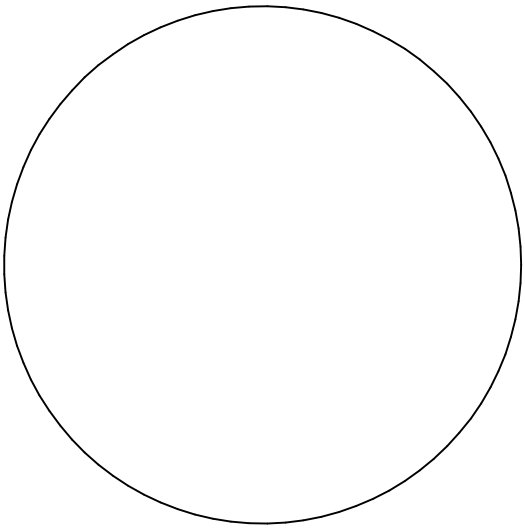

OH!

12224

14240
KIT INDOOR
rev:00

linea light

Decorative

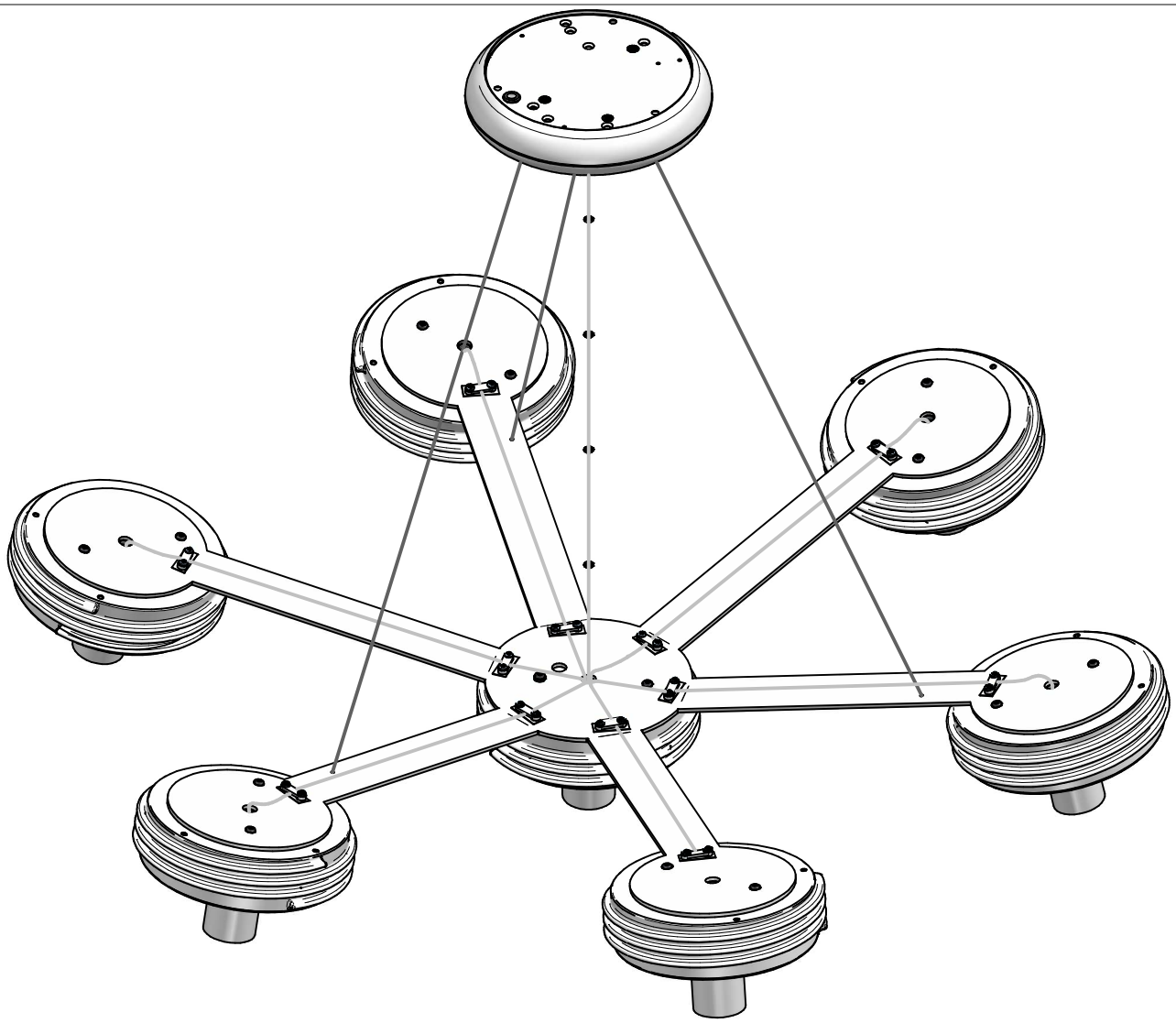

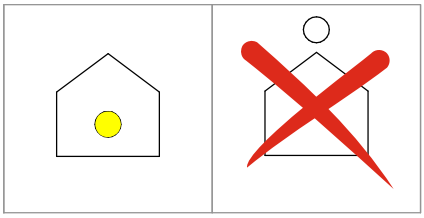

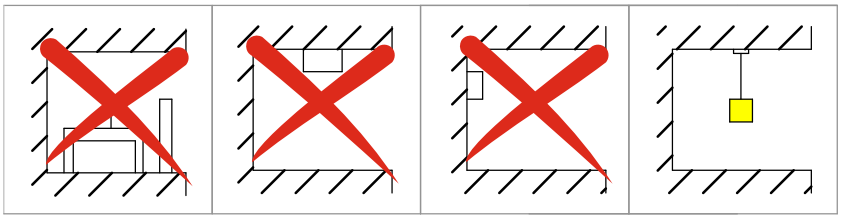

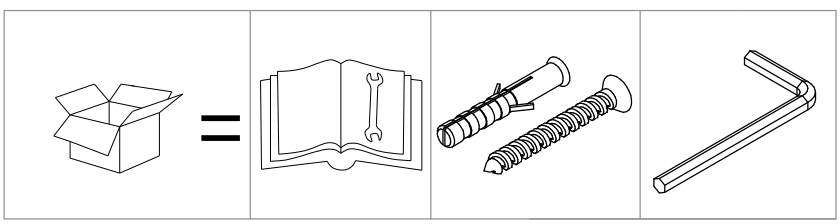

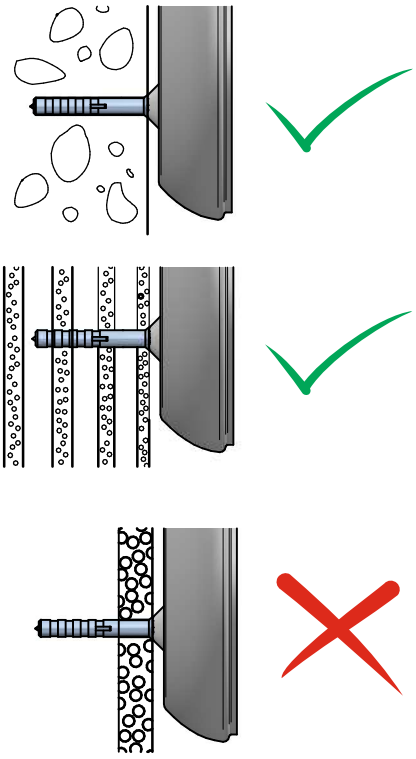

14240
KIT INDOOR
rev:00

1

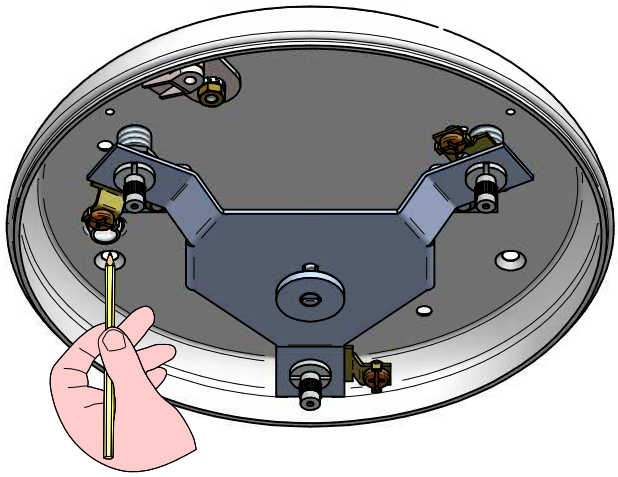

2

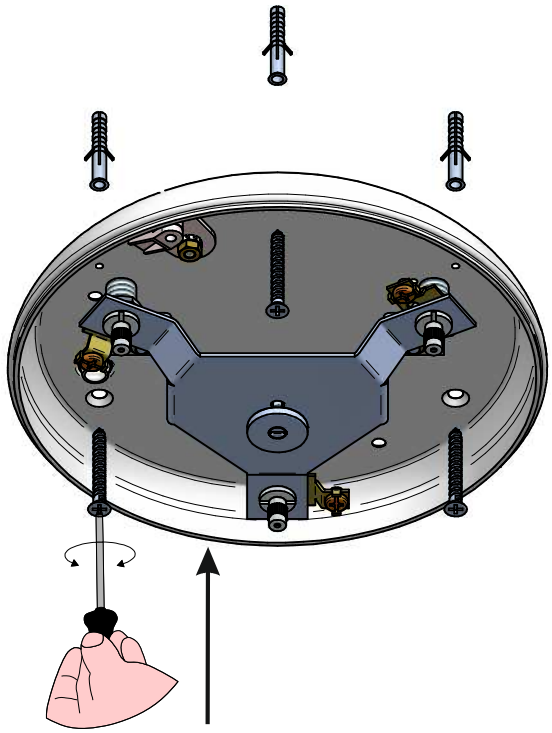

3

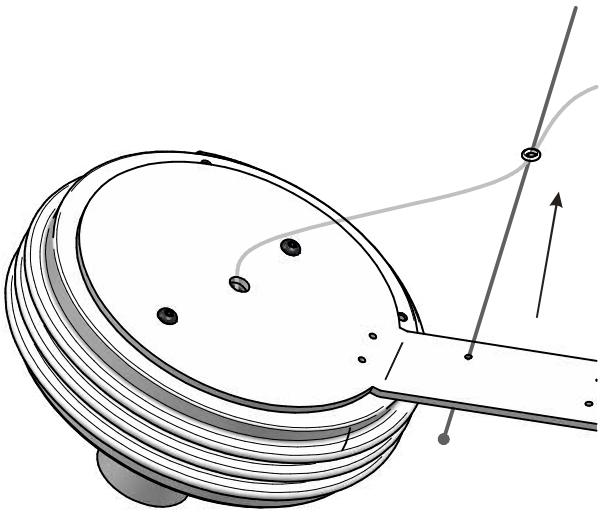

4

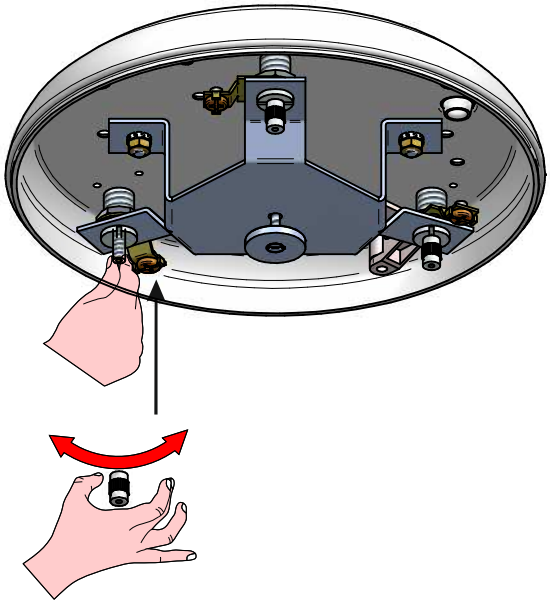

5

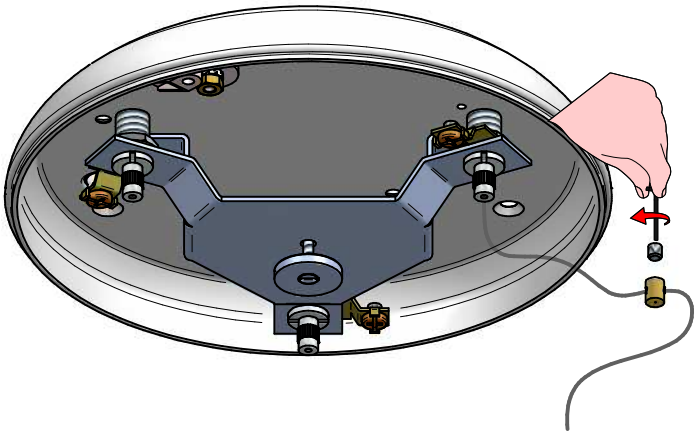

6

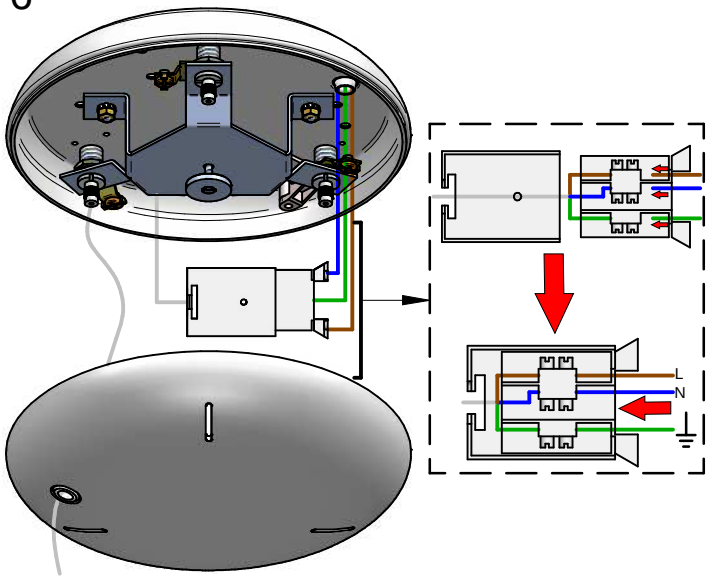

7

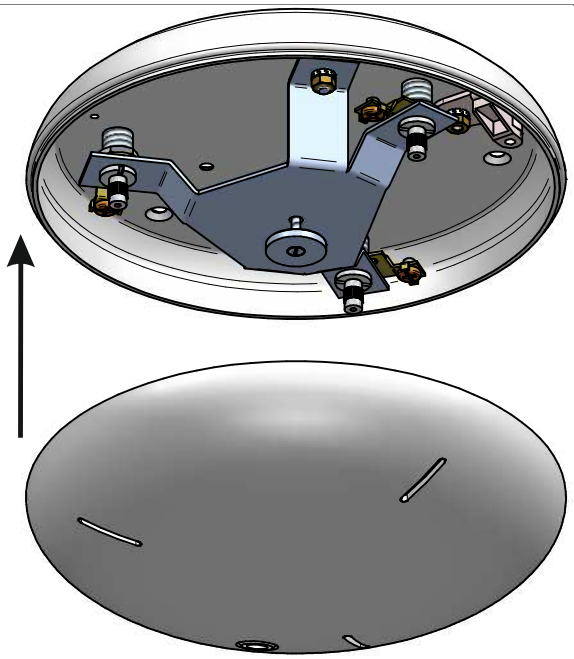

8

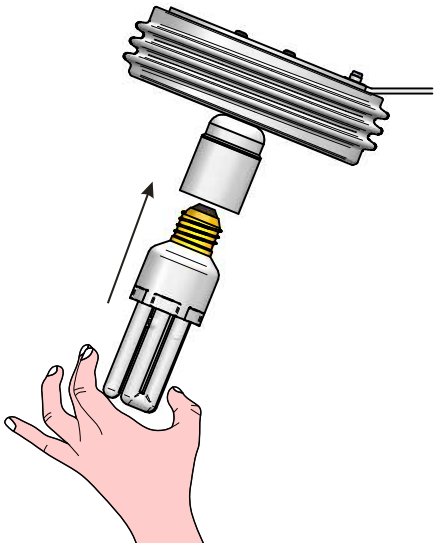

9

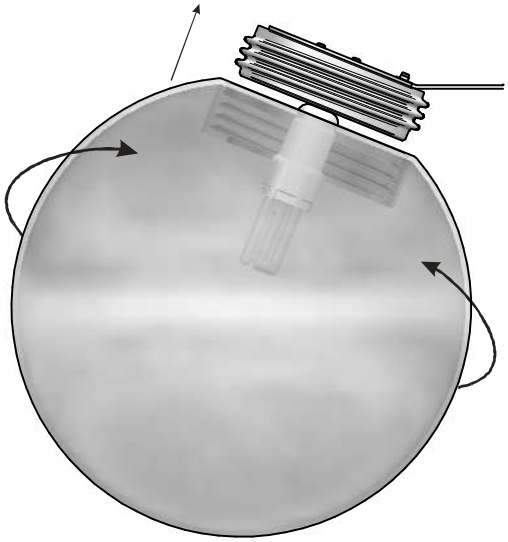

COMPATIBLE ARTICLE

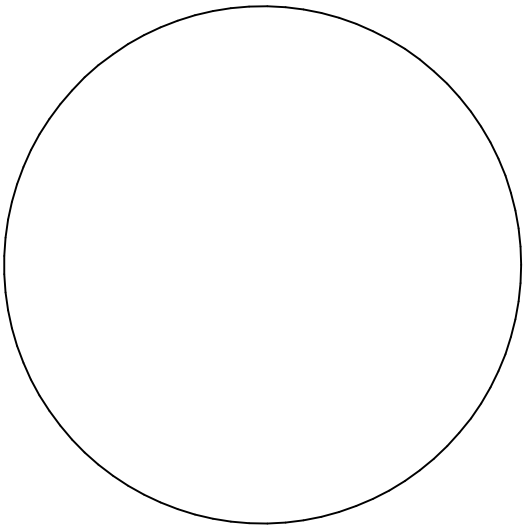

OH!

12225