14252
KIT INDOOR
rev:00



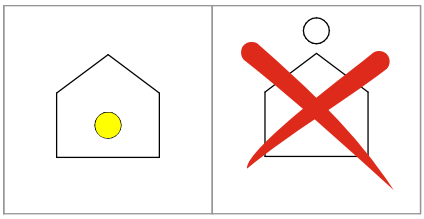

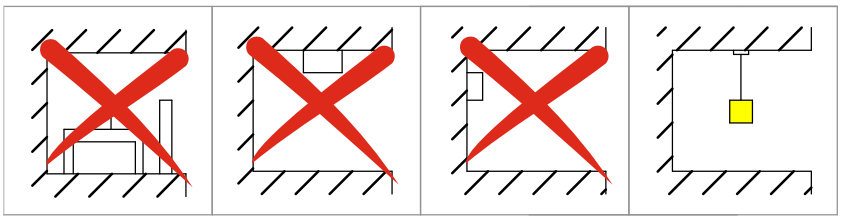

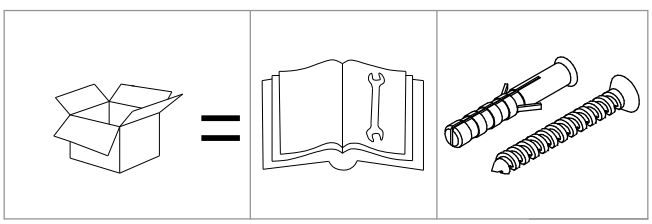

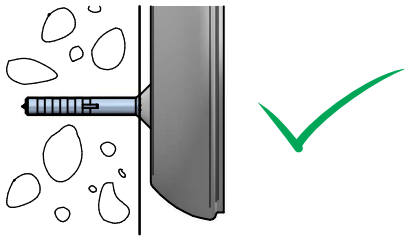

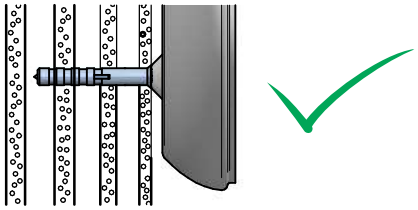

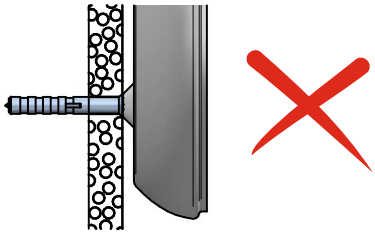

14252
KIT INDOOR
rev:00

1

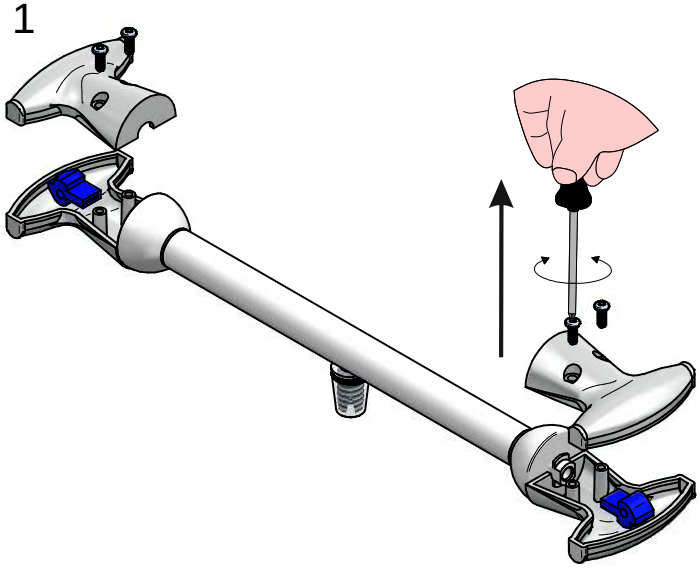

2

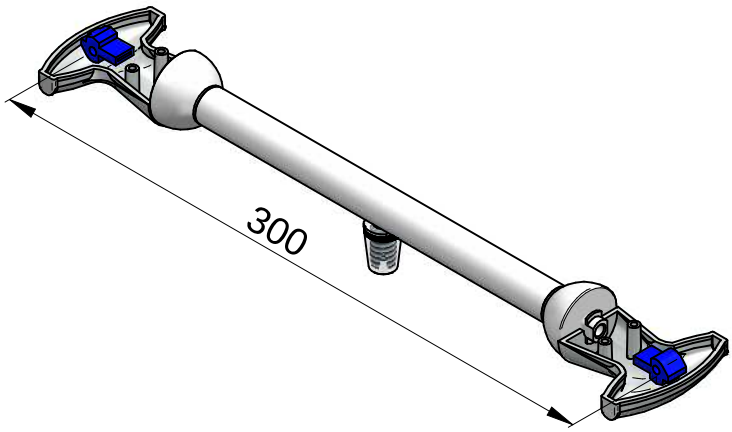

3

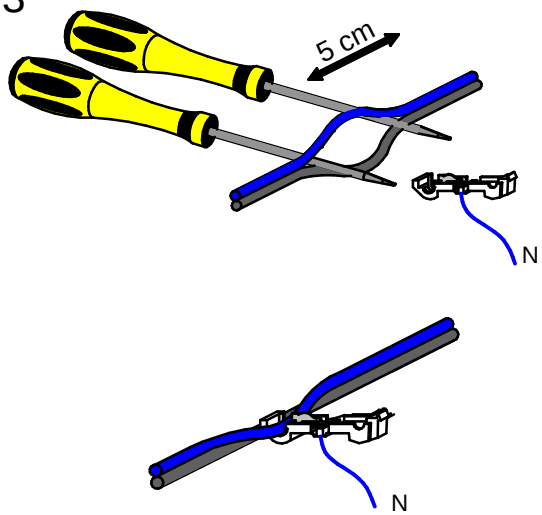

4

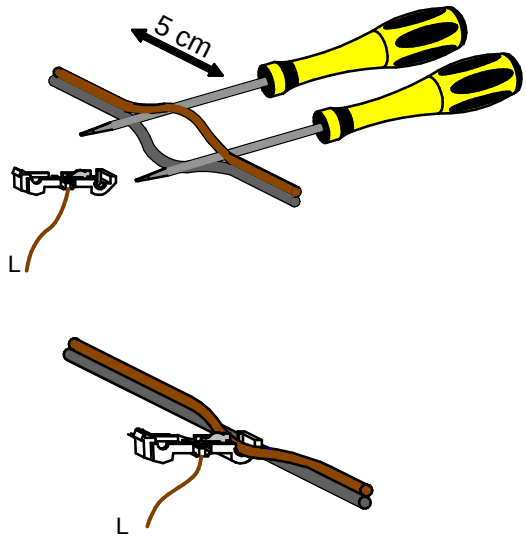

5

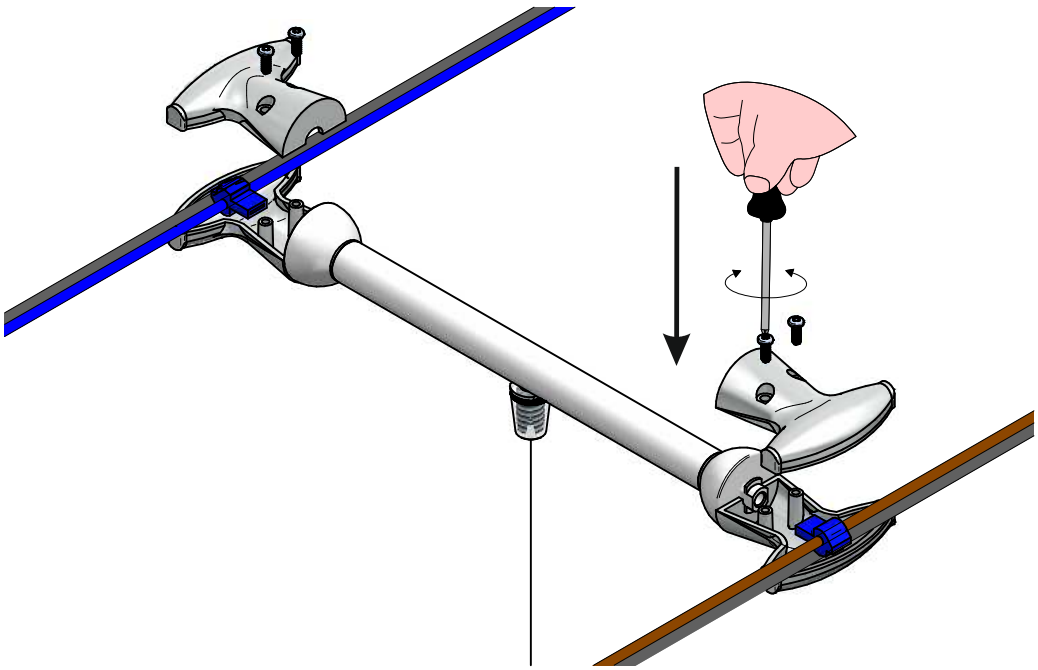

14252
KIT INDOOR
rev:00

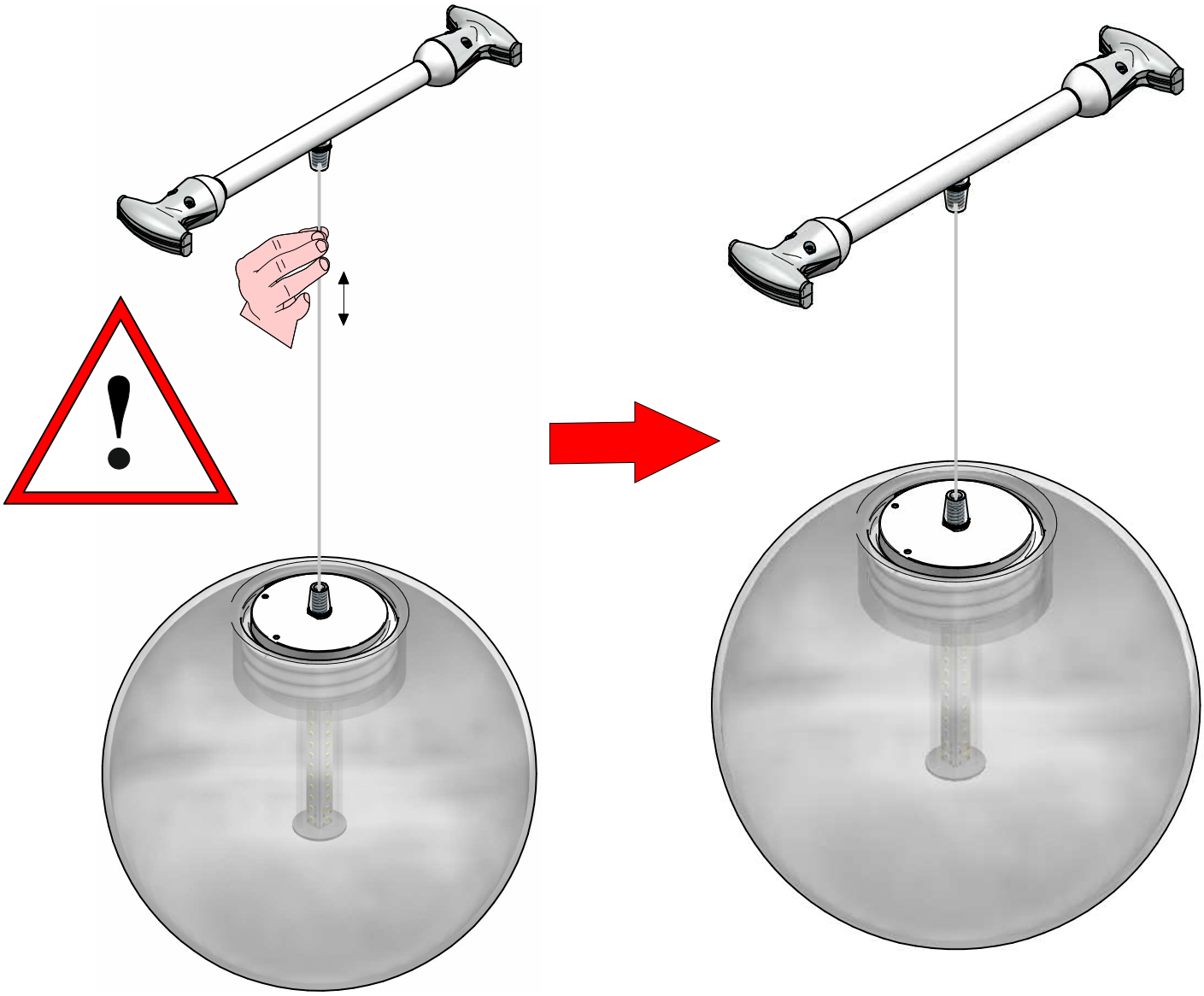

1

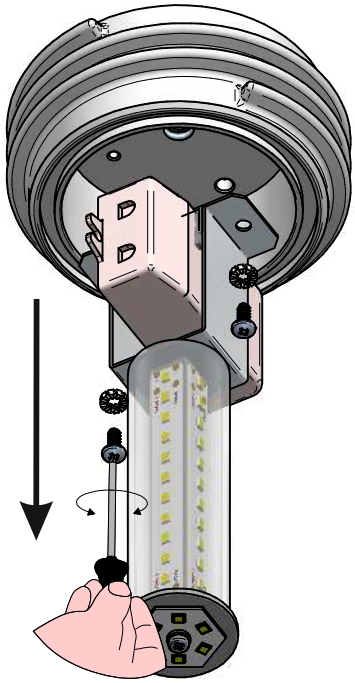

2

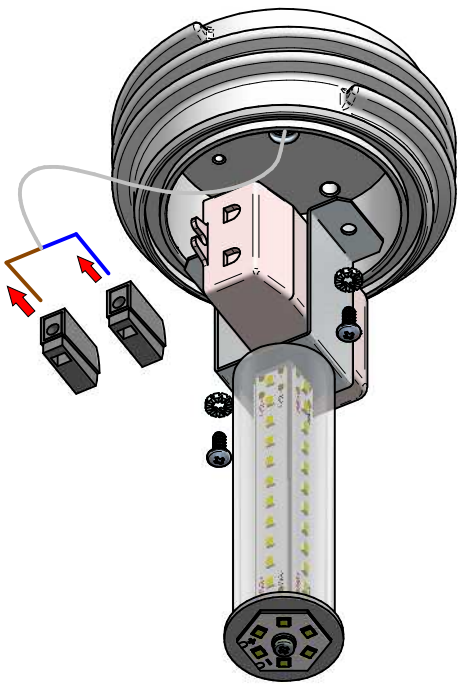

3

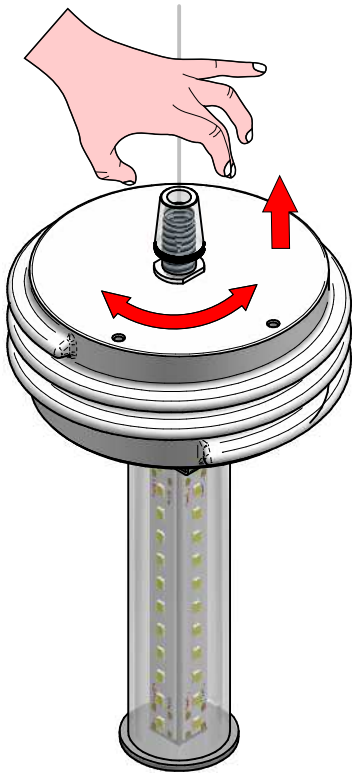

4

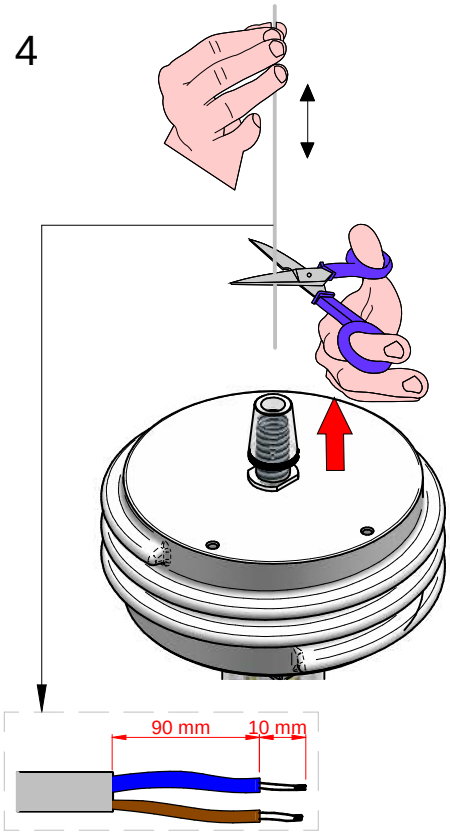

5

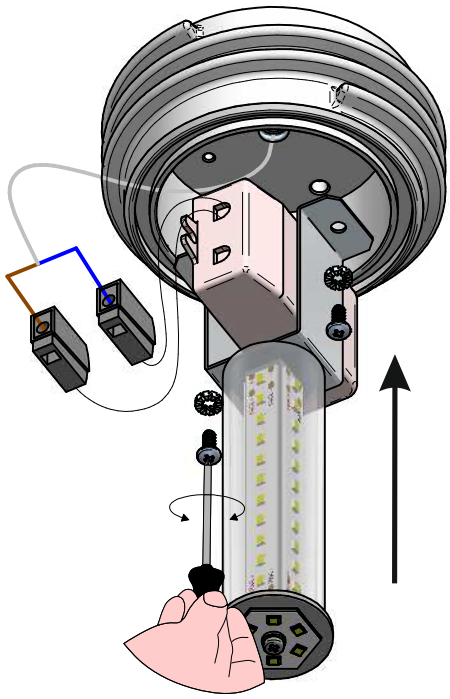

6

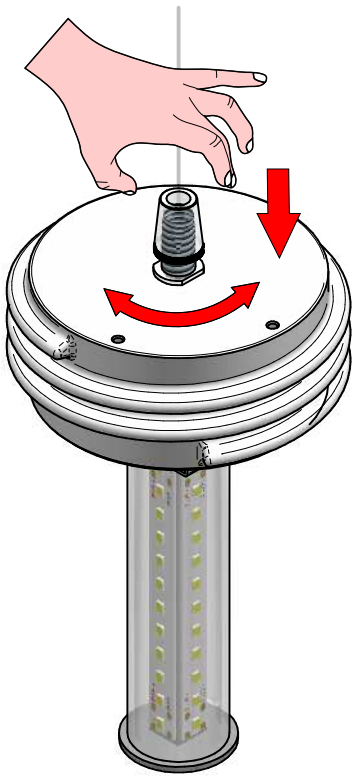

7

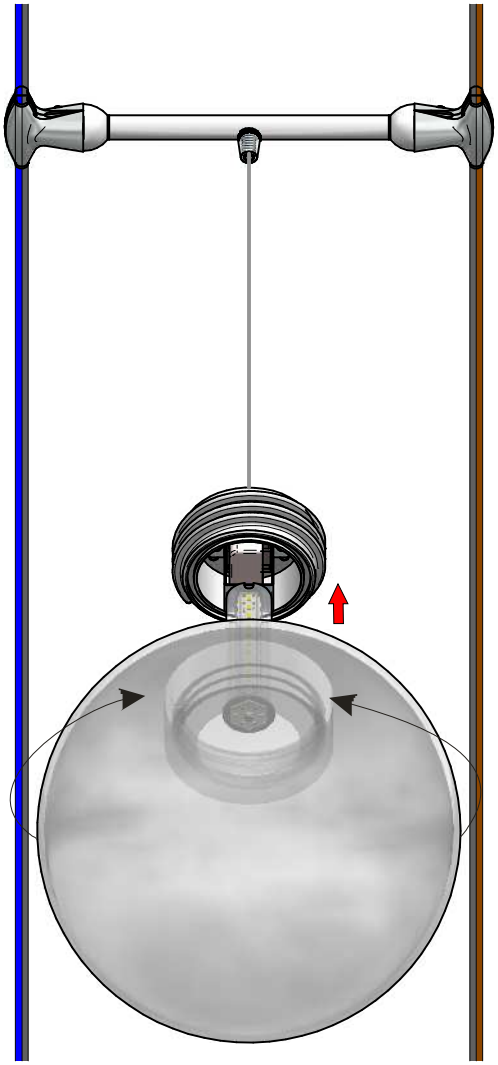

14252
KIT INDOOR
rev:00

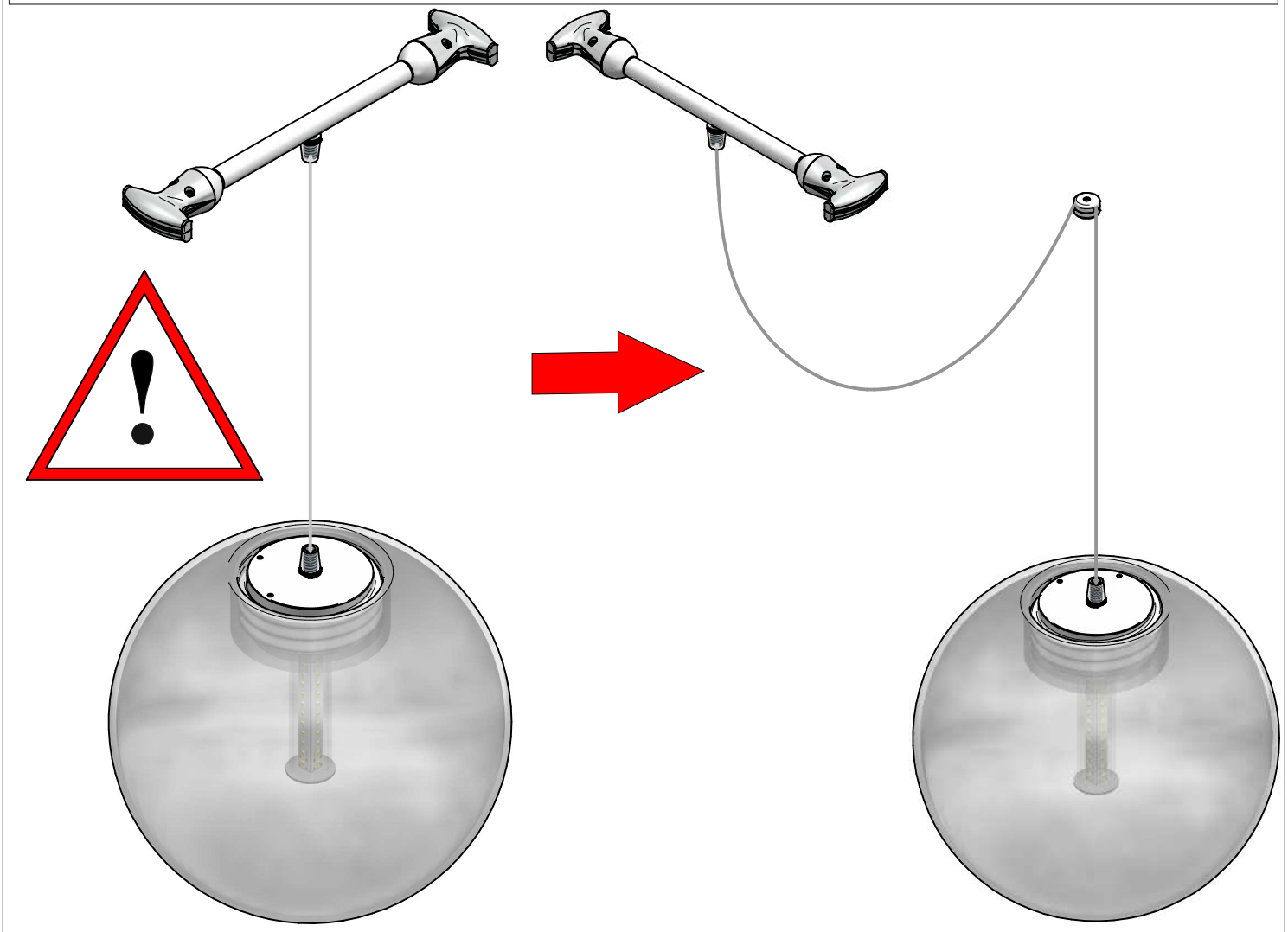

1

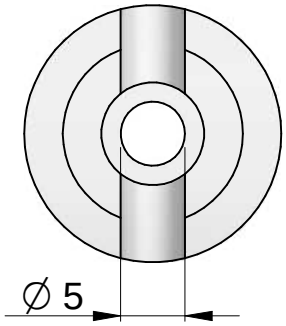

2

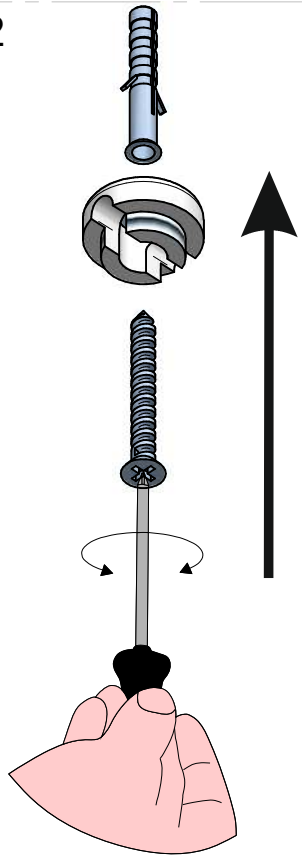

3

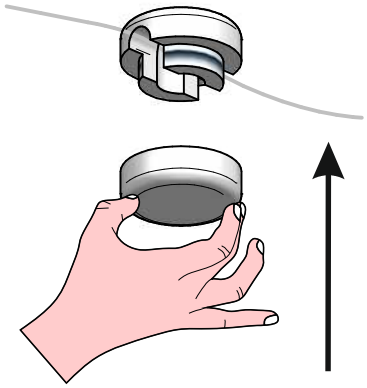

4

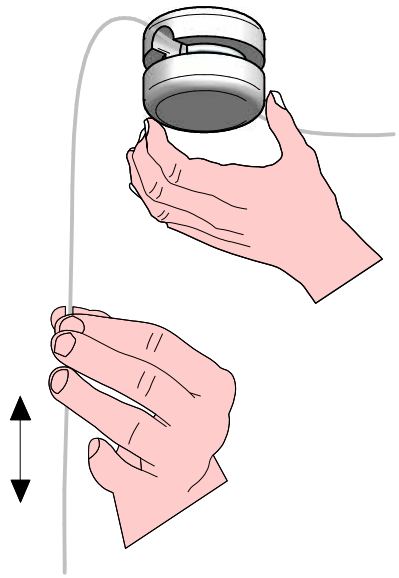

COMPATIBLE ARTICLE

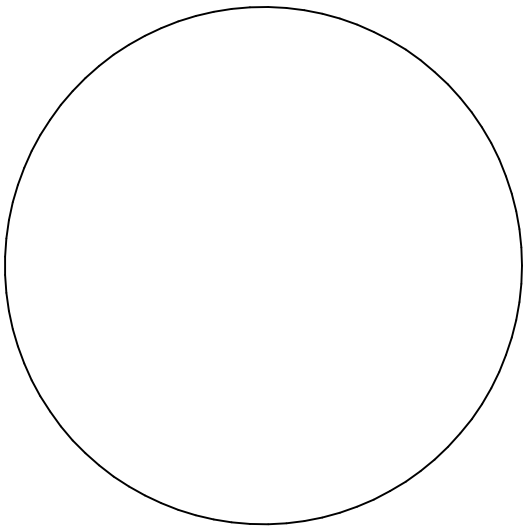

OH!

12142

14255
KIT INDOOR
rev:00



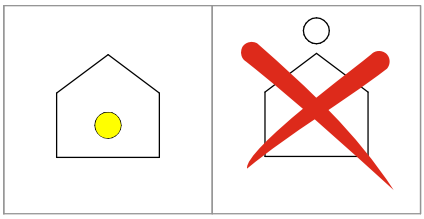

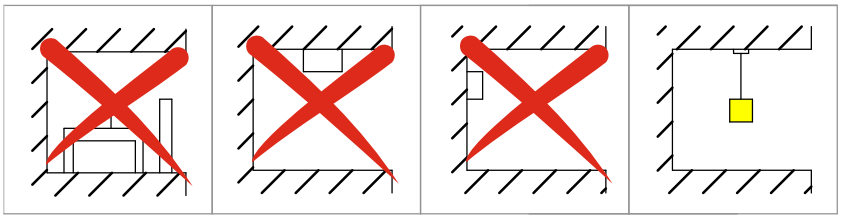

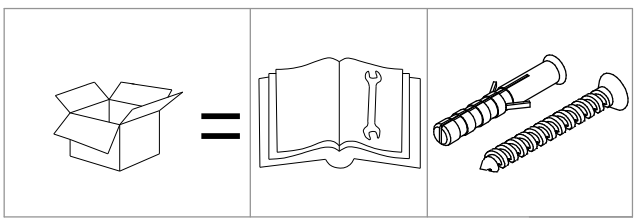

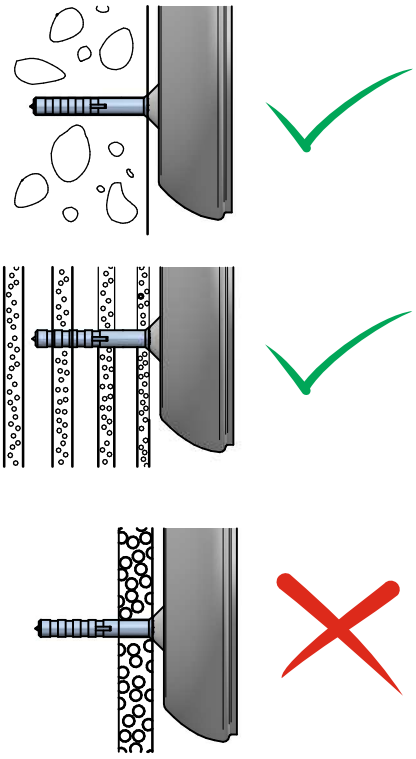

14255
KIT INDOOR
rev:00

1

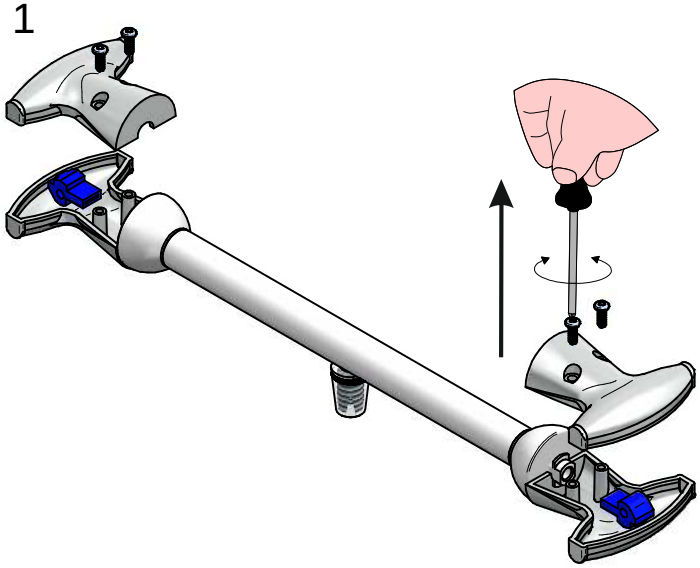

2

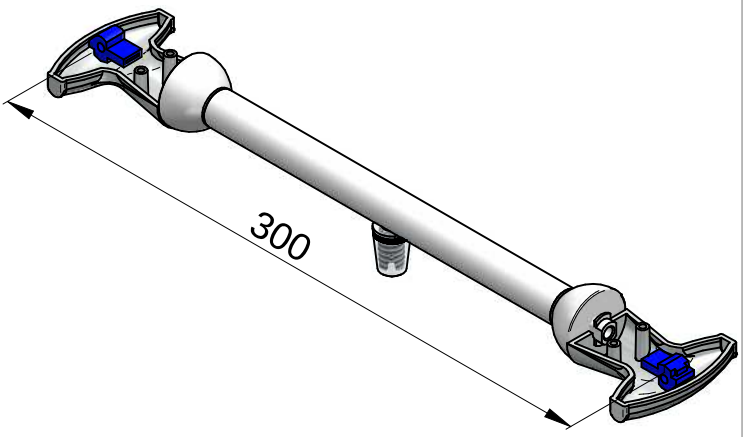

3

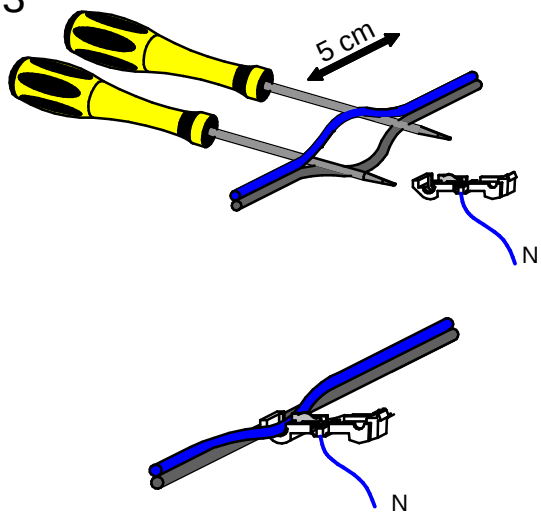

4

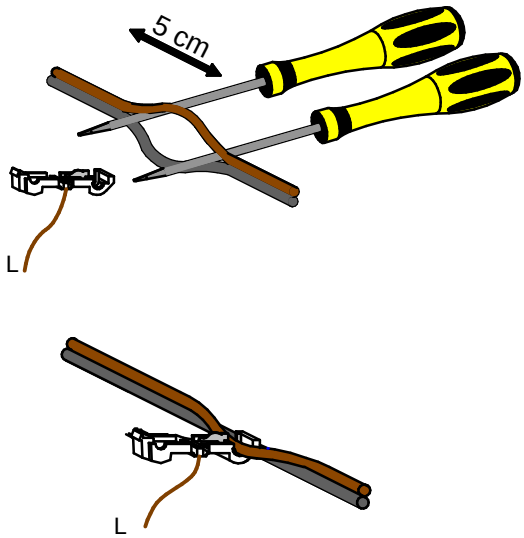

5

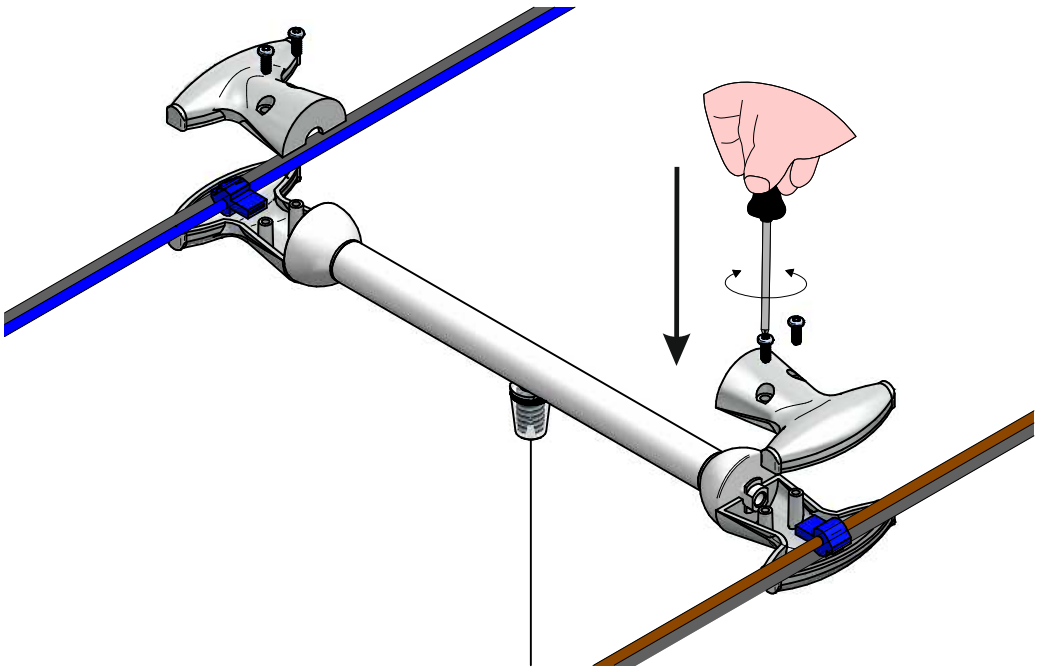

14255
KIT INDOOR
rev:00

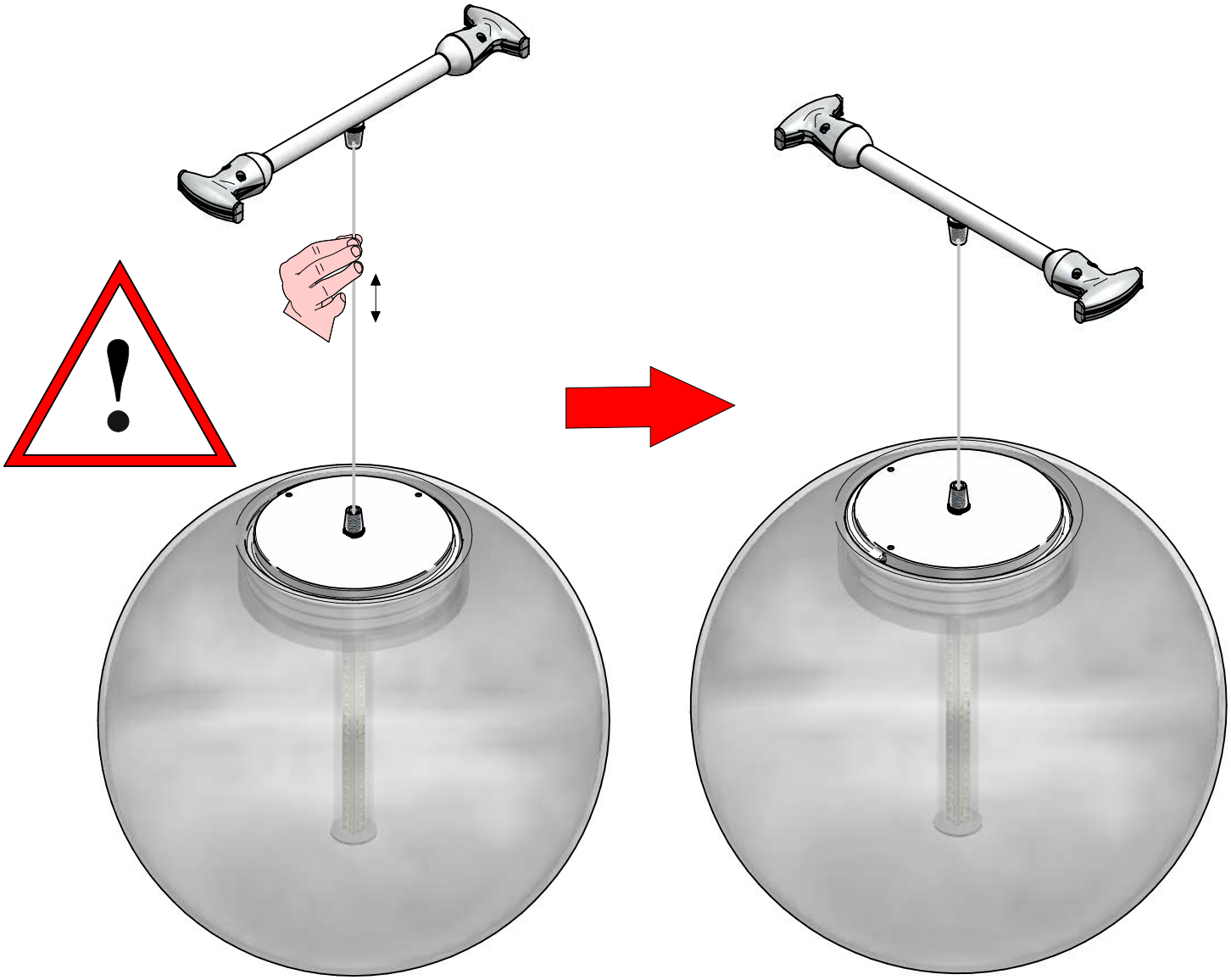

1

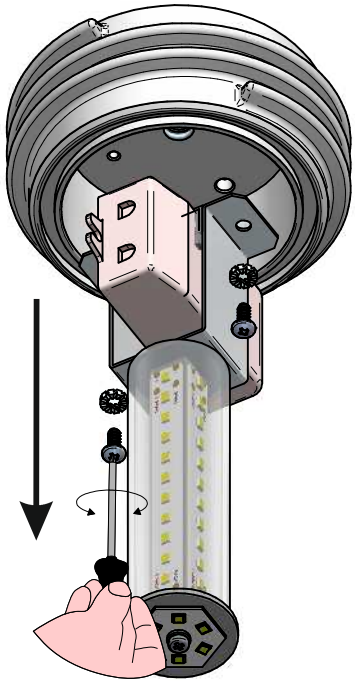

2

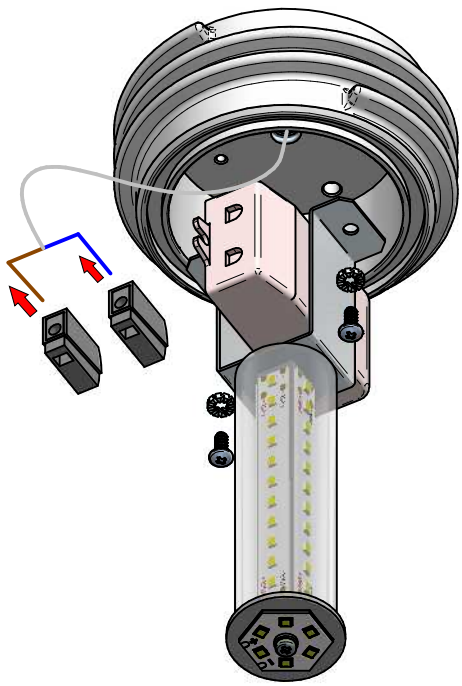

3

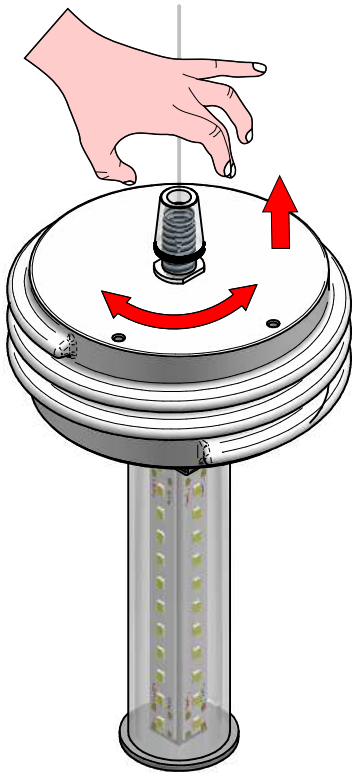

14255
KIT INDOOR
rev:00

4

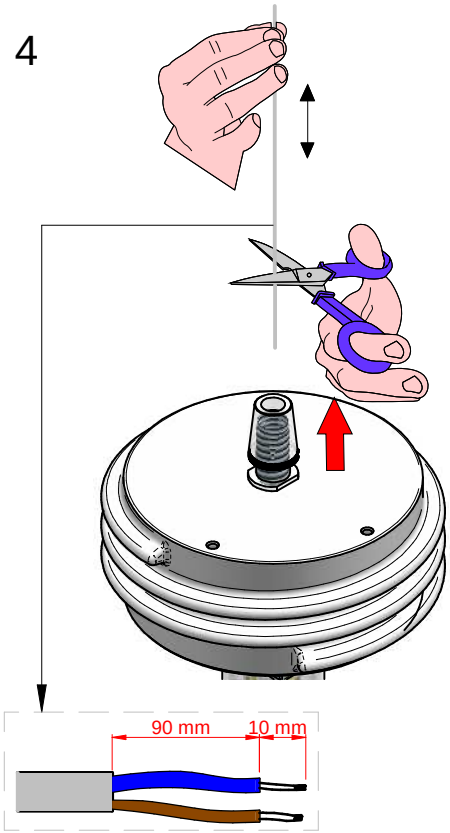

5

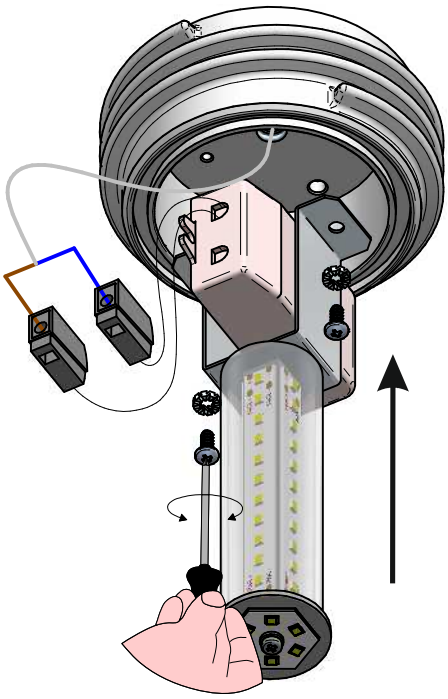

6

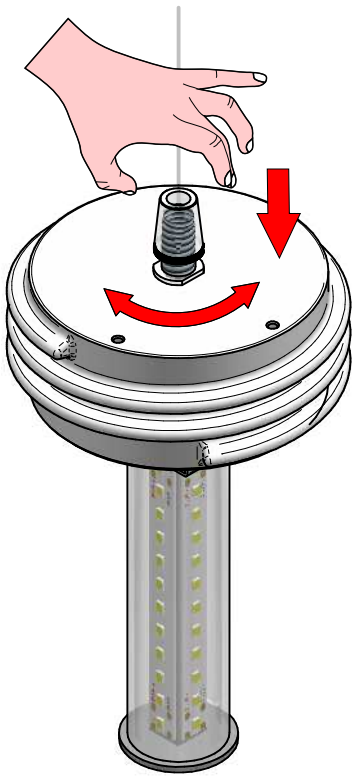

7

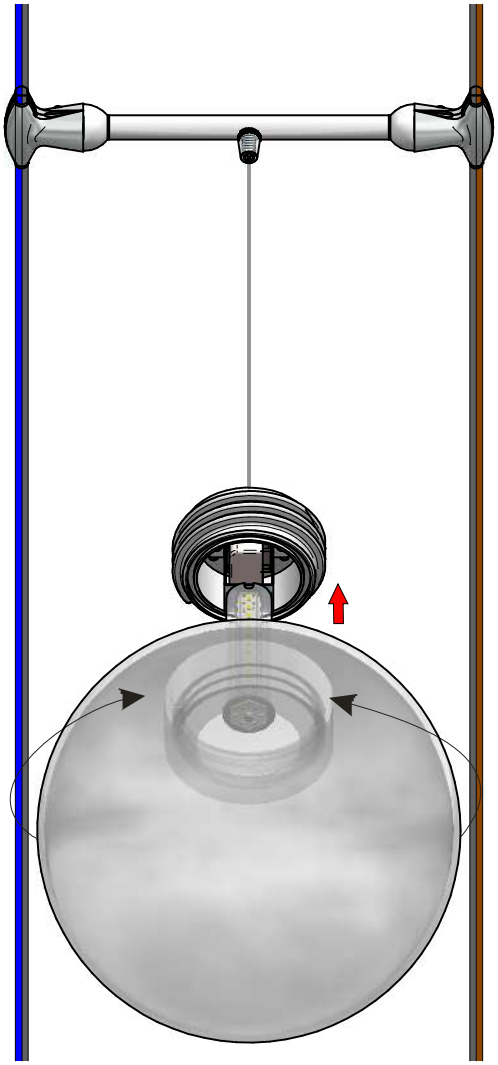

14255
KIT INDOOR
rev:00

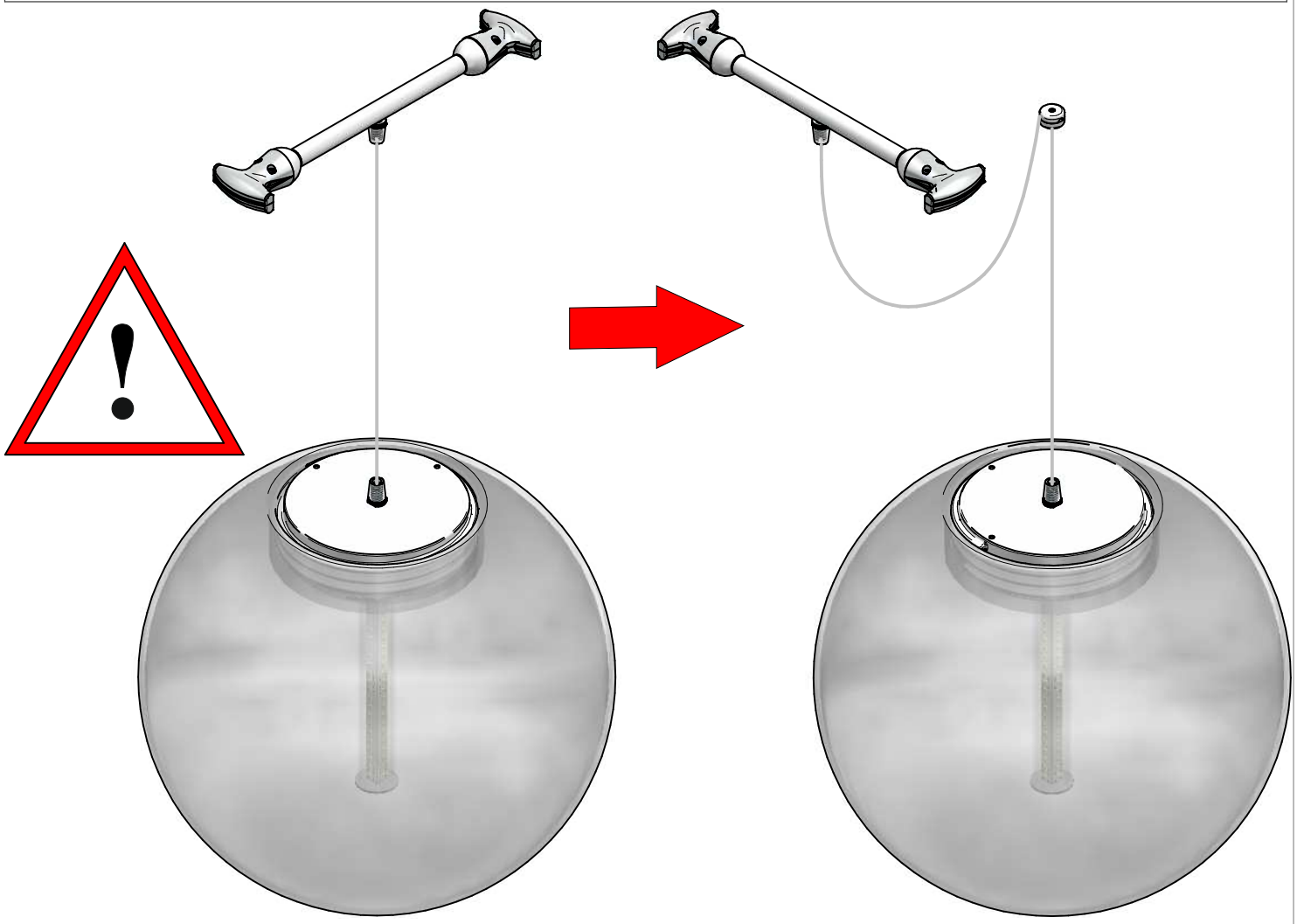

1

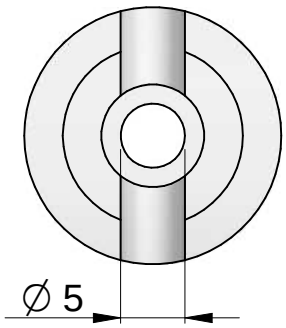

2

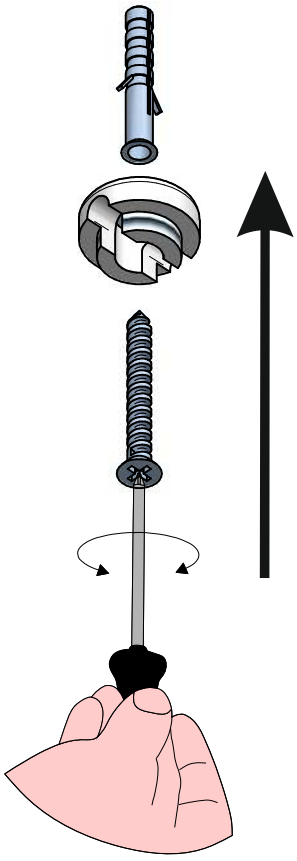

3

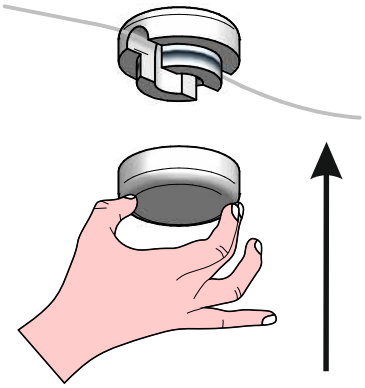

4

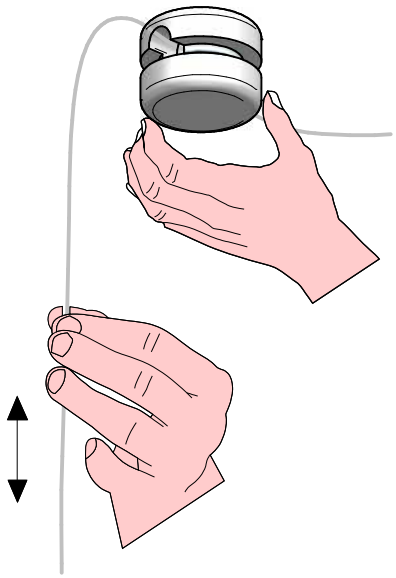

COMPATIBLE ARTICLE

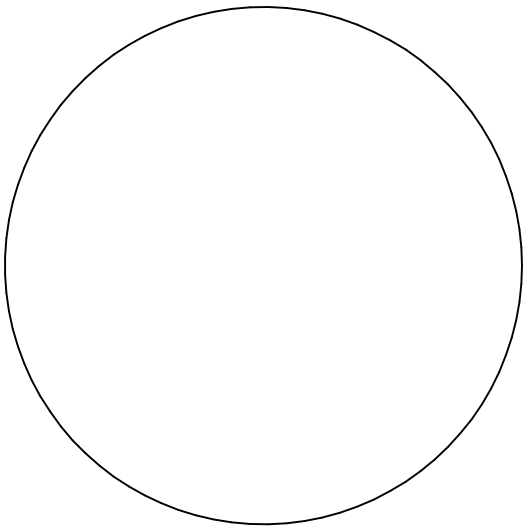

OH!

12145