14214
KIT INDOOR
rev:00

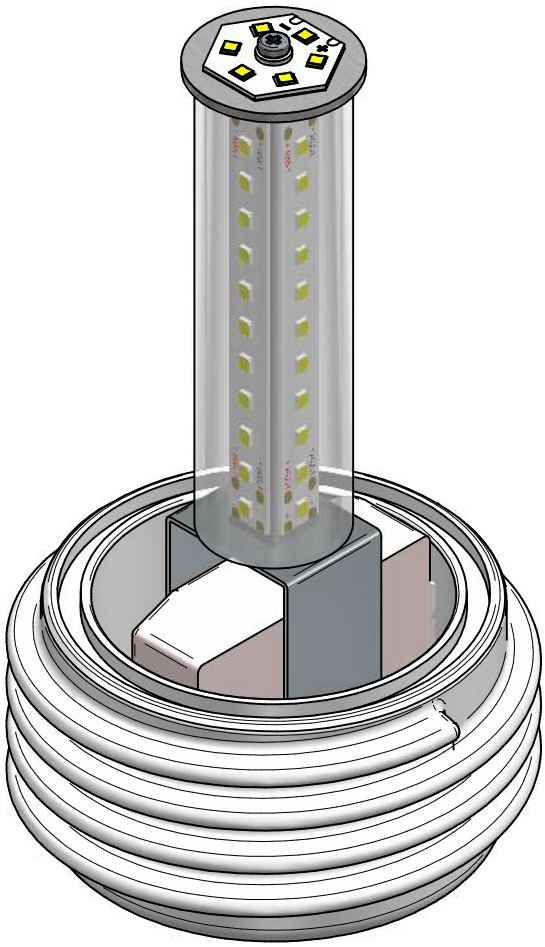

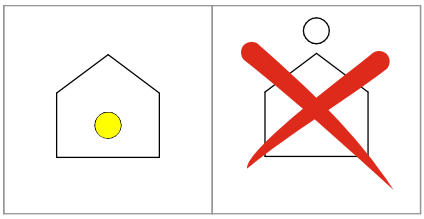

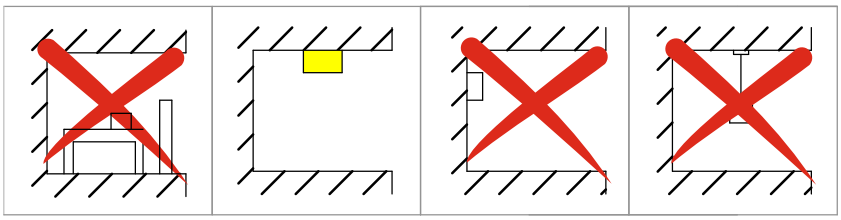

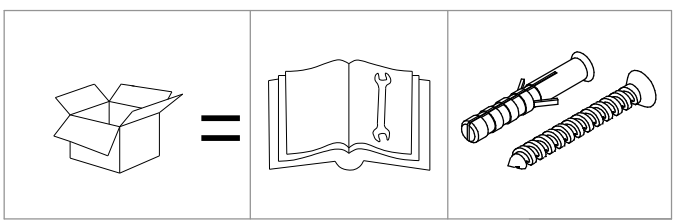

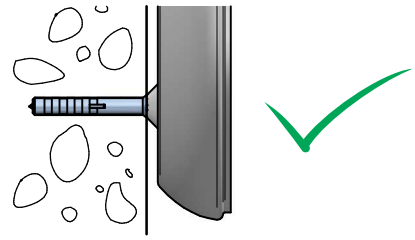

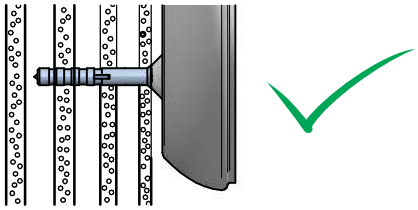

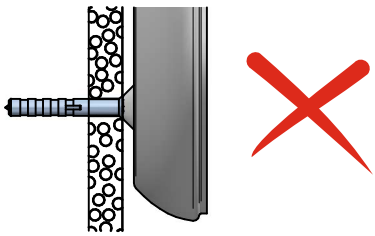

1

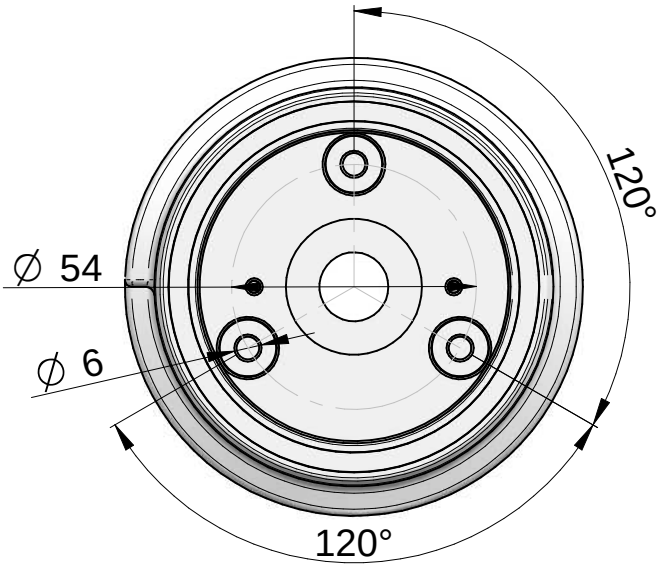

2

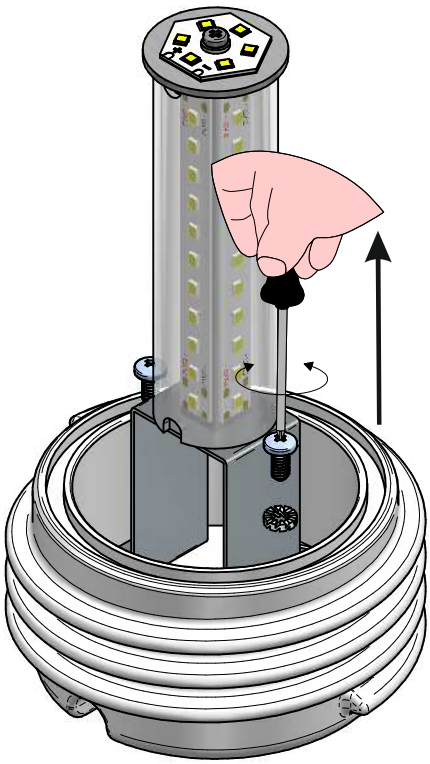

3

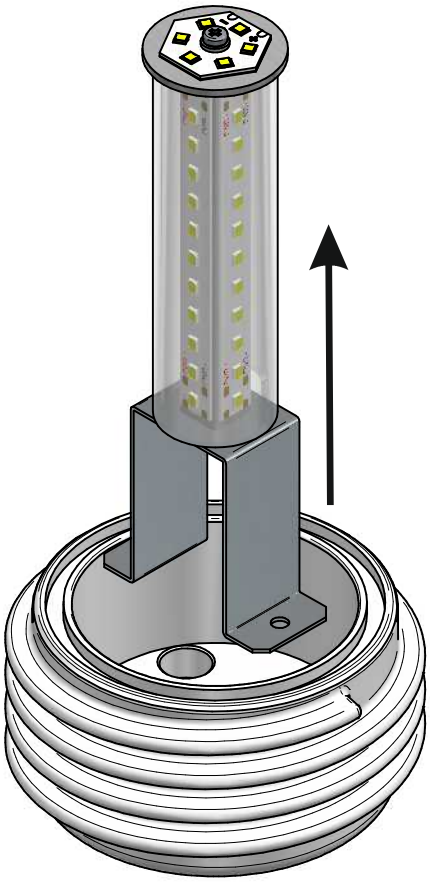

4

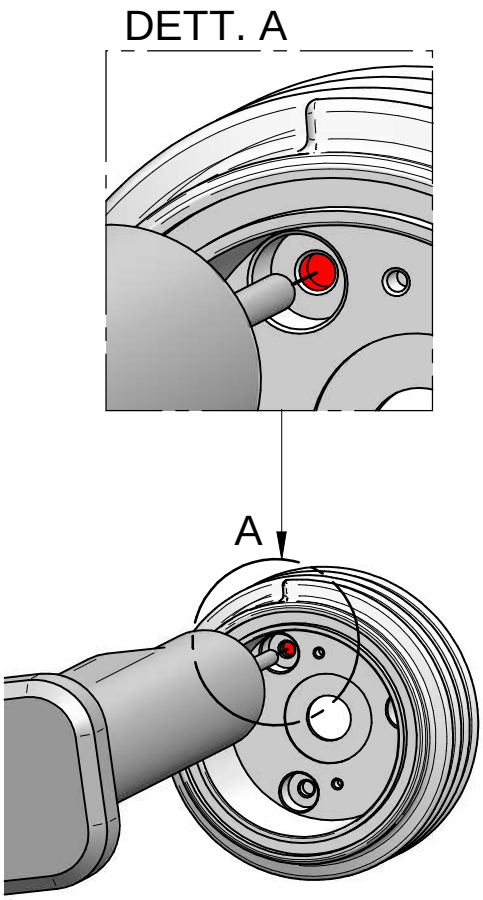

5

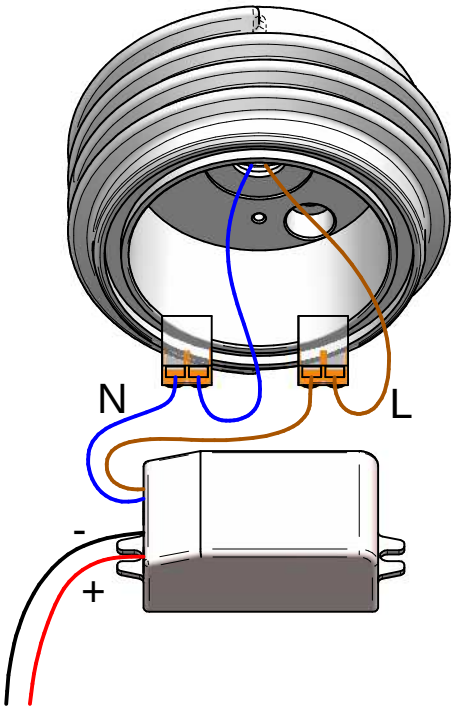

6

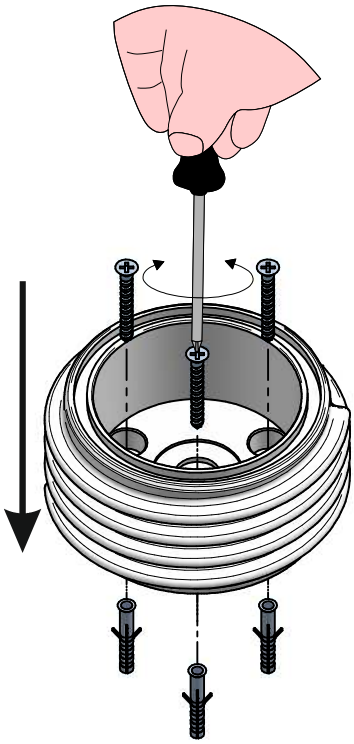

7

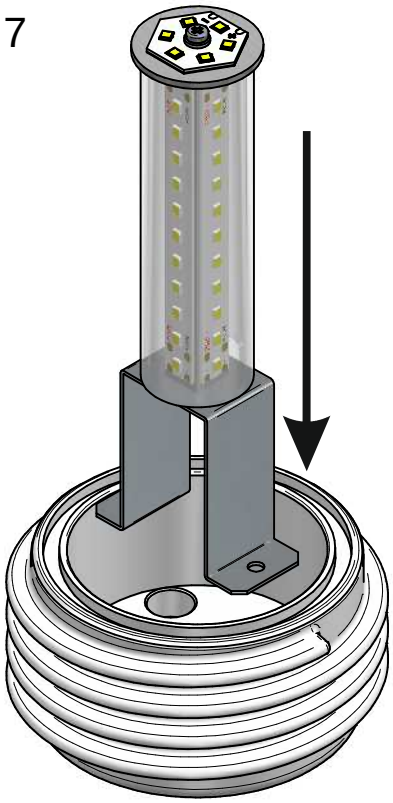

8

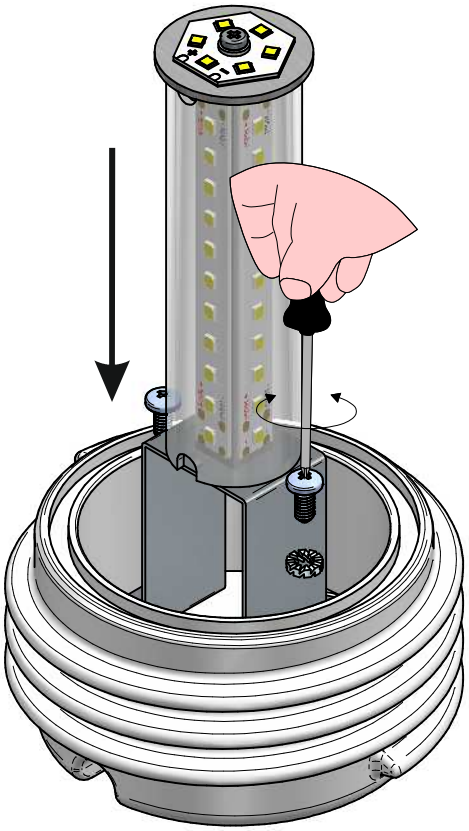

9

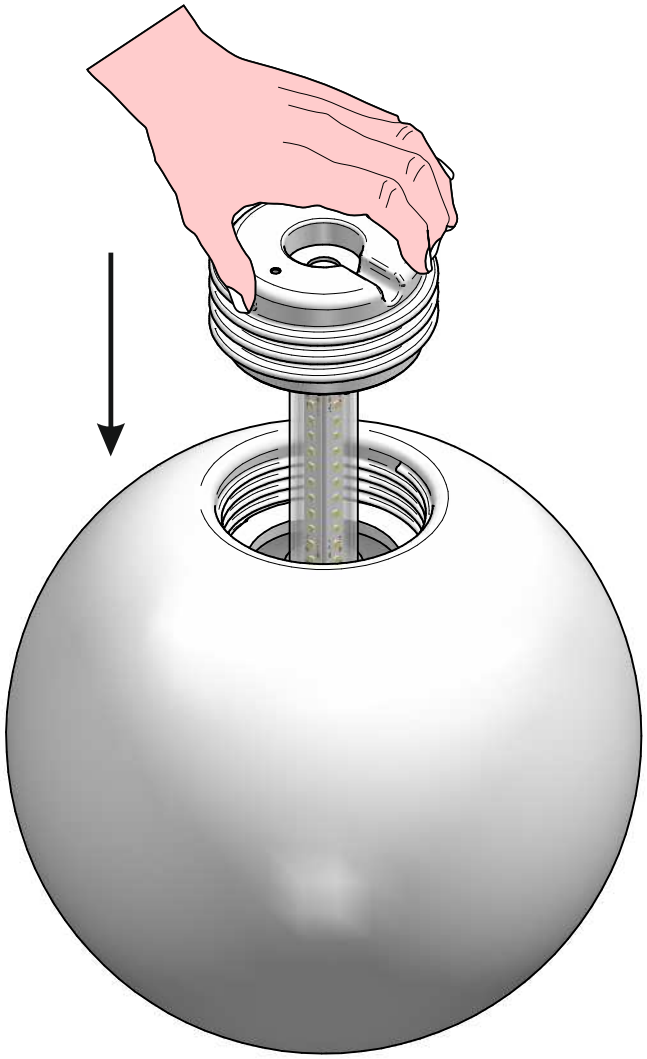

COMPATIBLE ARTICLE

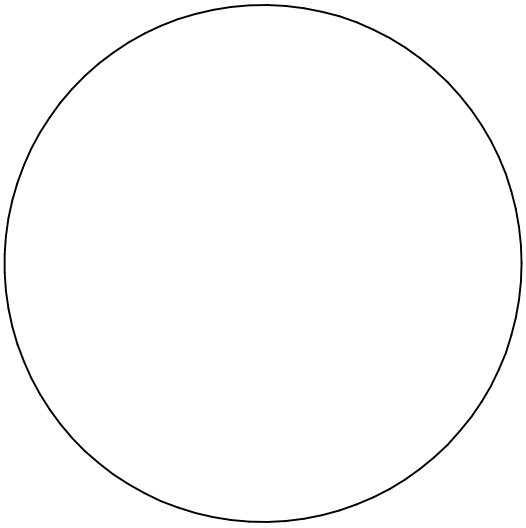

OH!

12131

14224
KIT INDOOR
rev:00

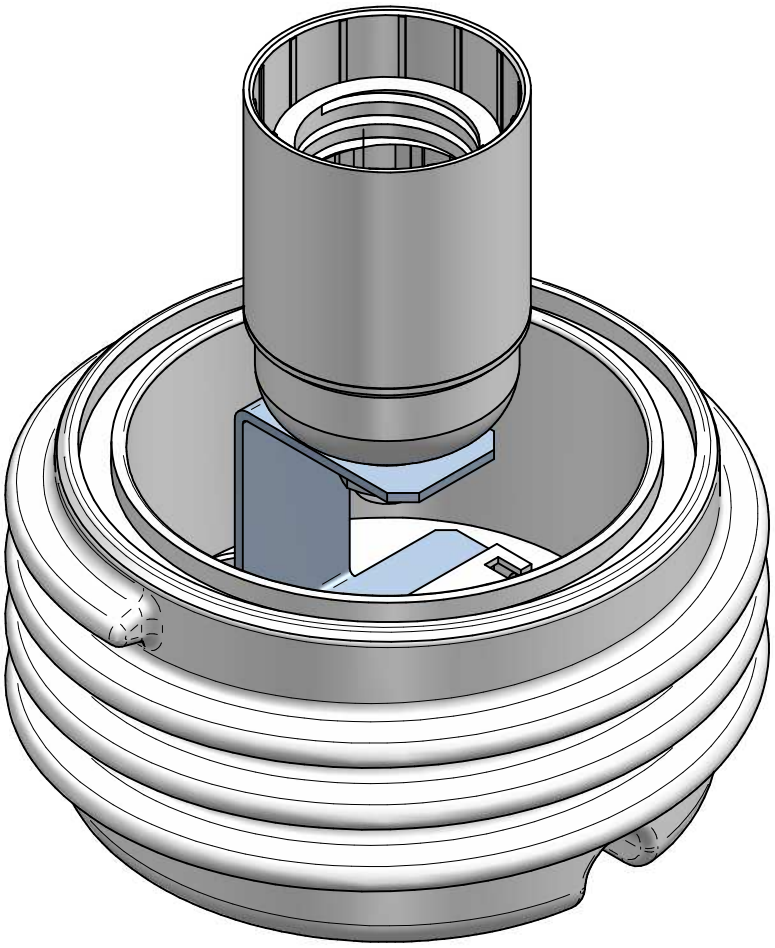

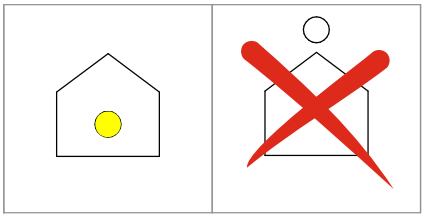

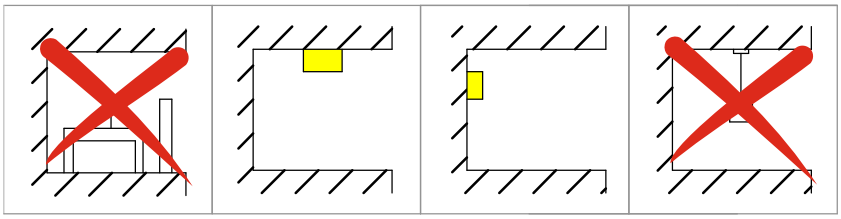

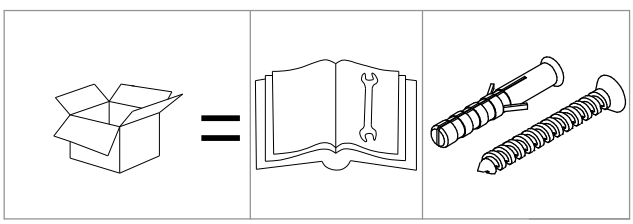

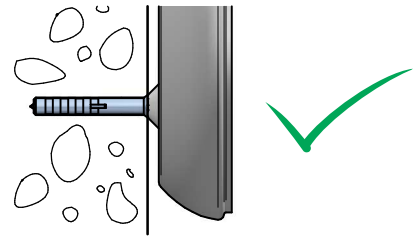

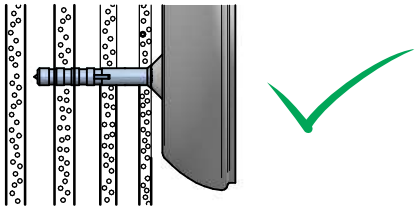

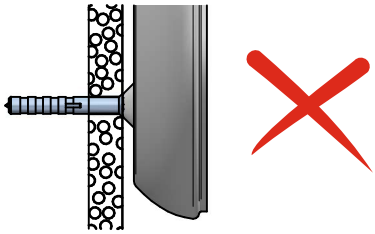

14224
KIT INDOOR
rev:00

linea light Decòrative

1

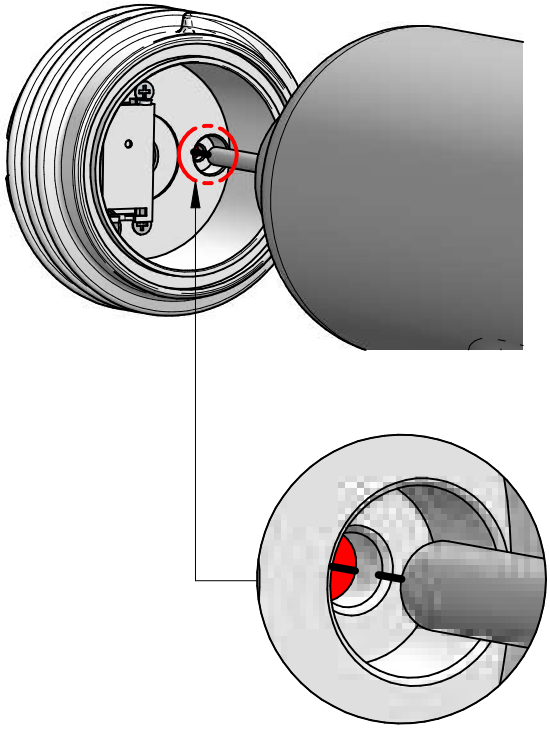

2

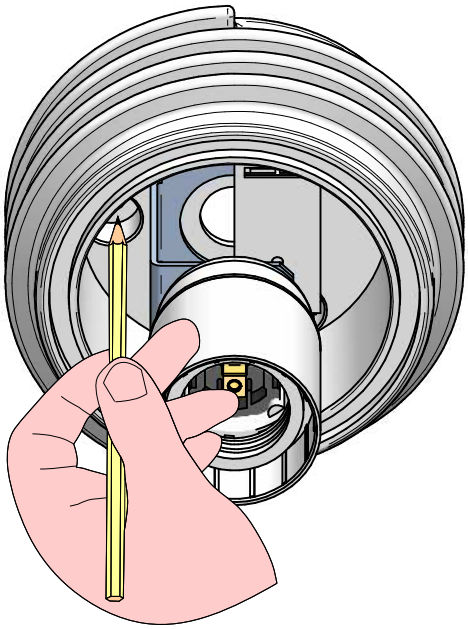

3

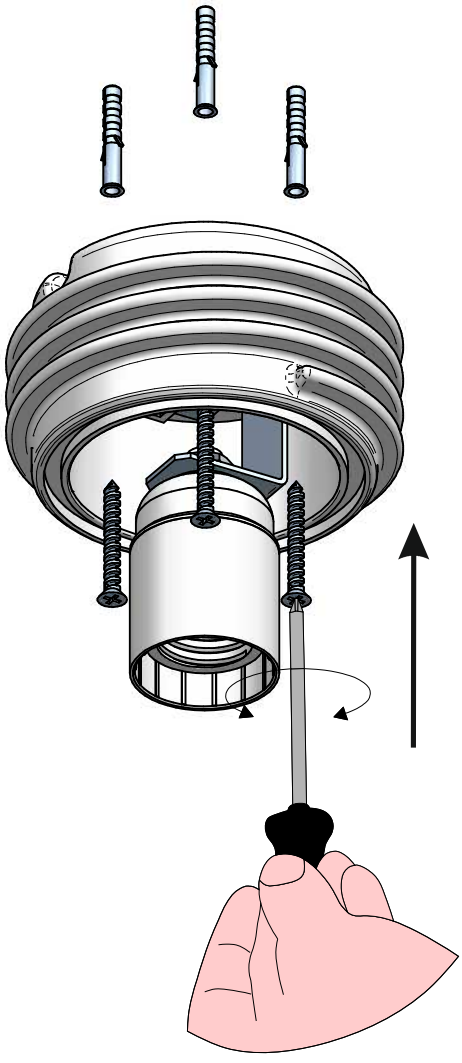

4

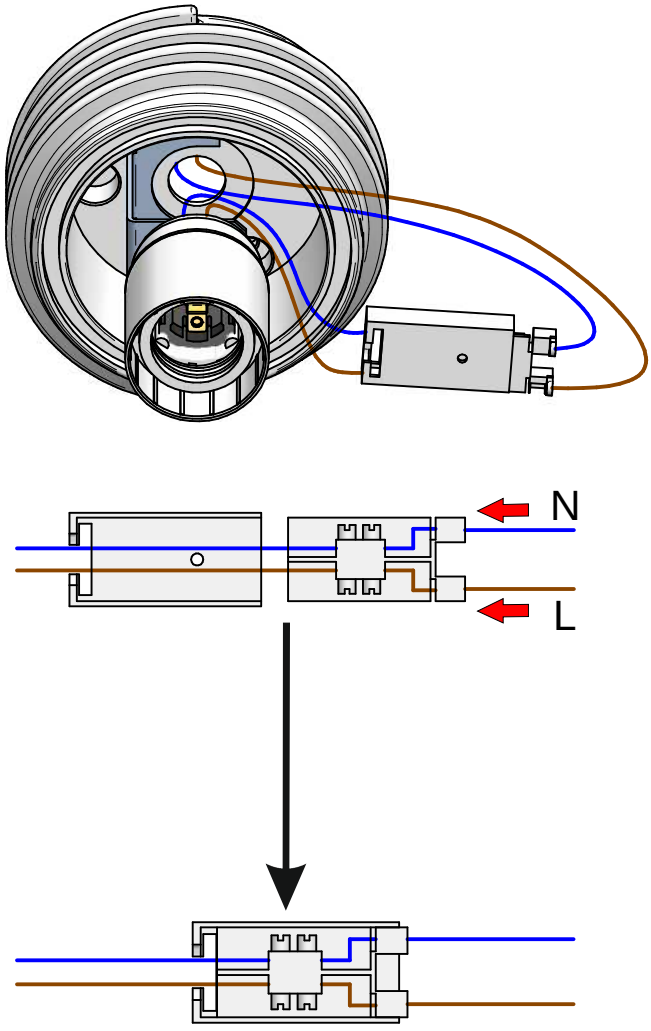

5

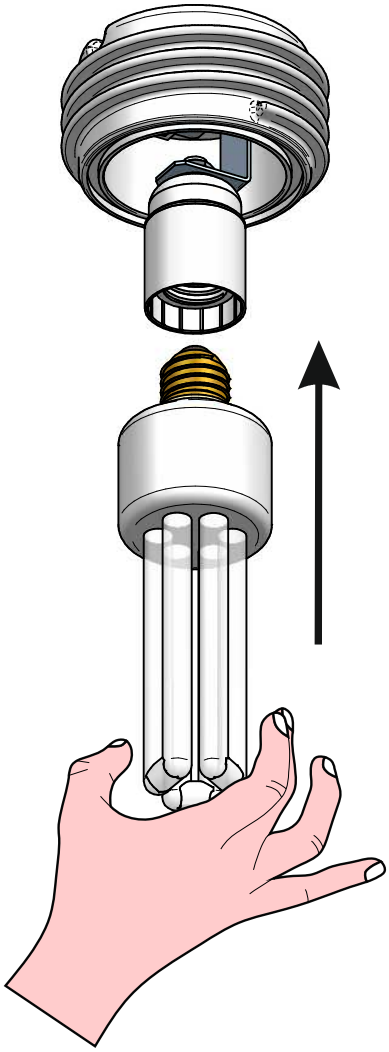

6

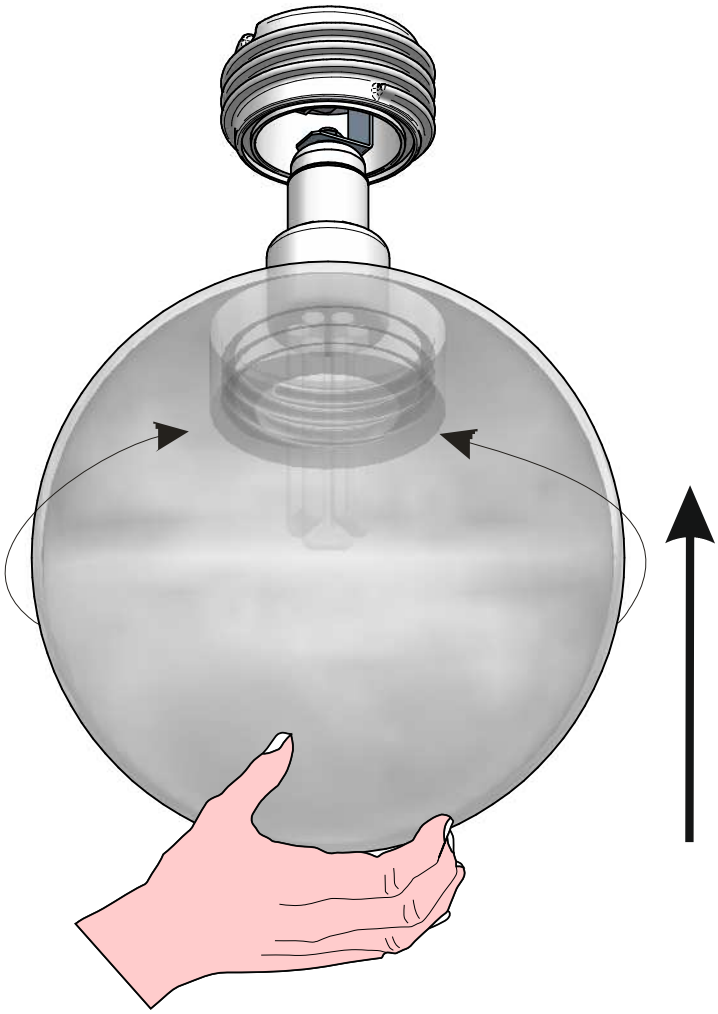

COMPATIBLE ARTICLE

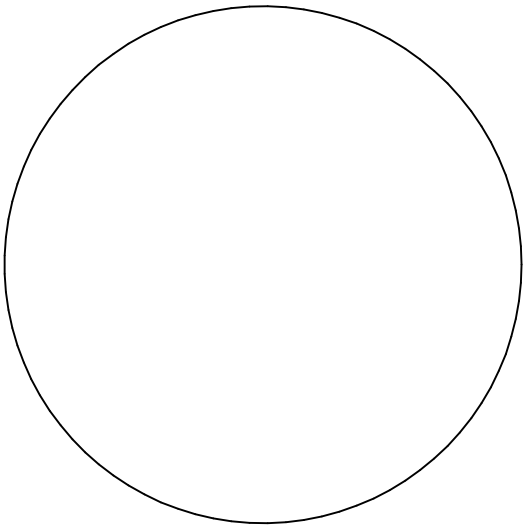

OH!

12122

14219
KIT INDOOR
rev:00

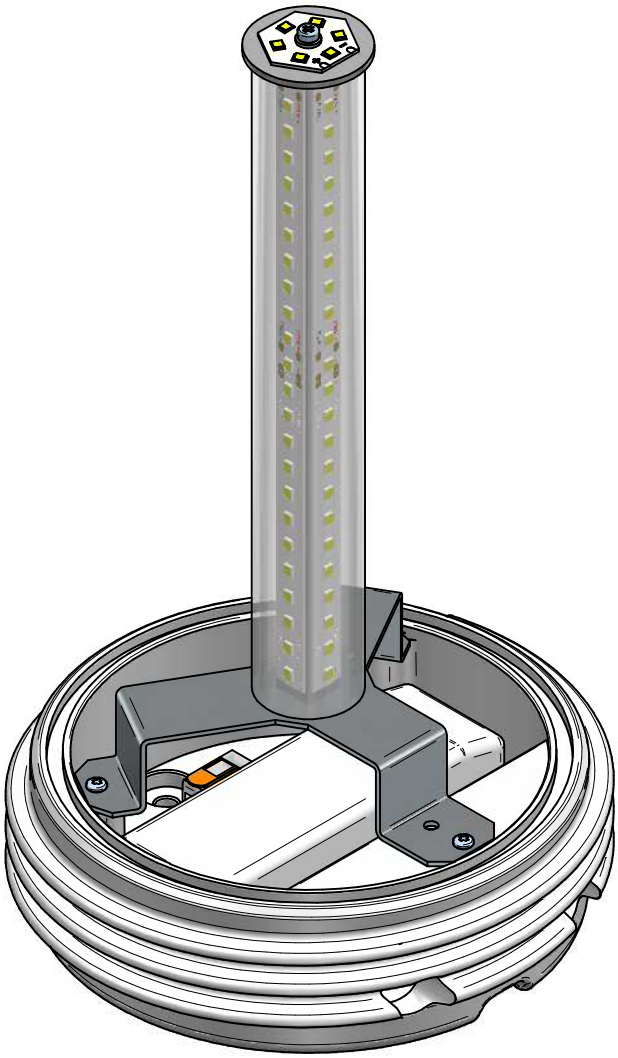

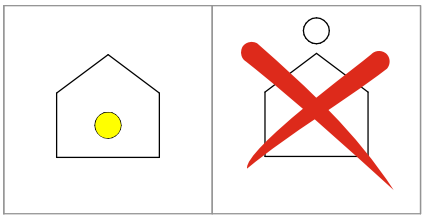

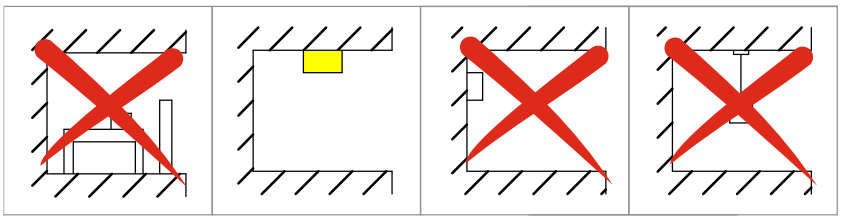

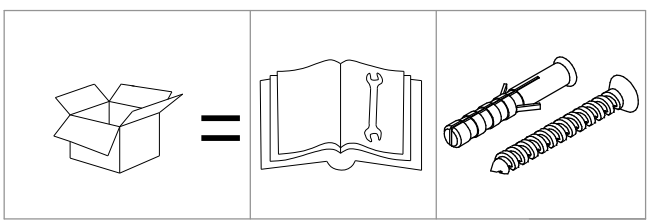

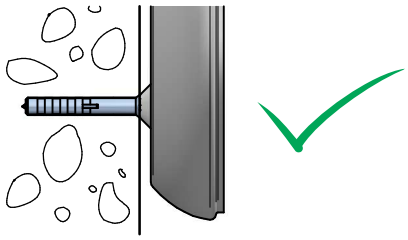

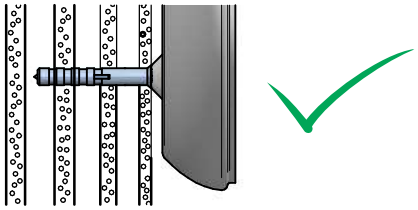

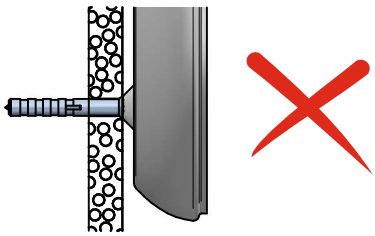

1

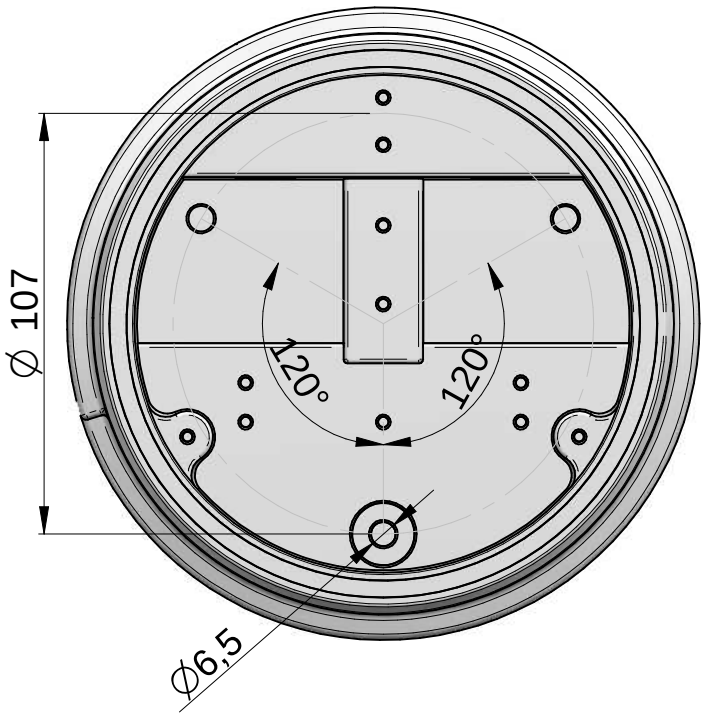

2

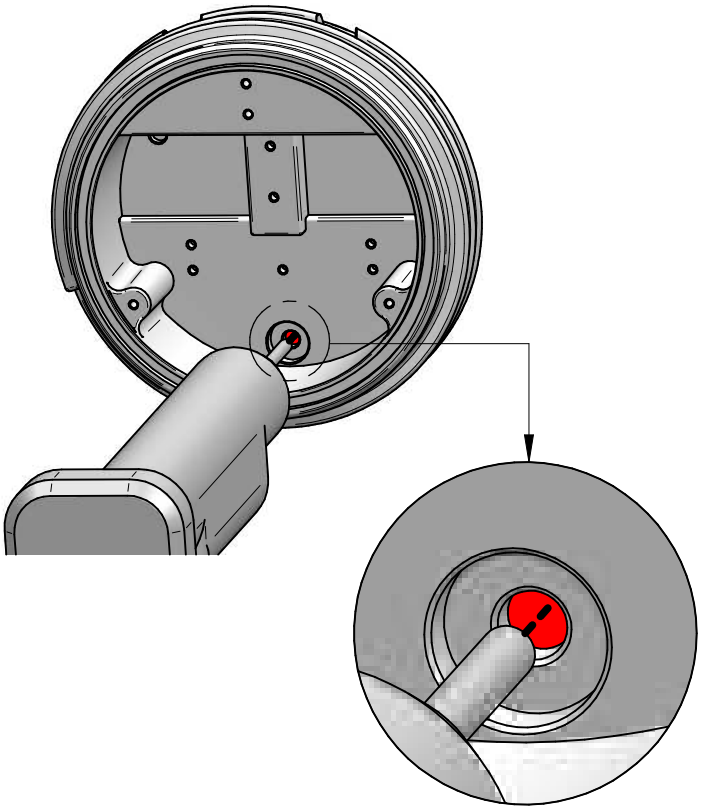

3

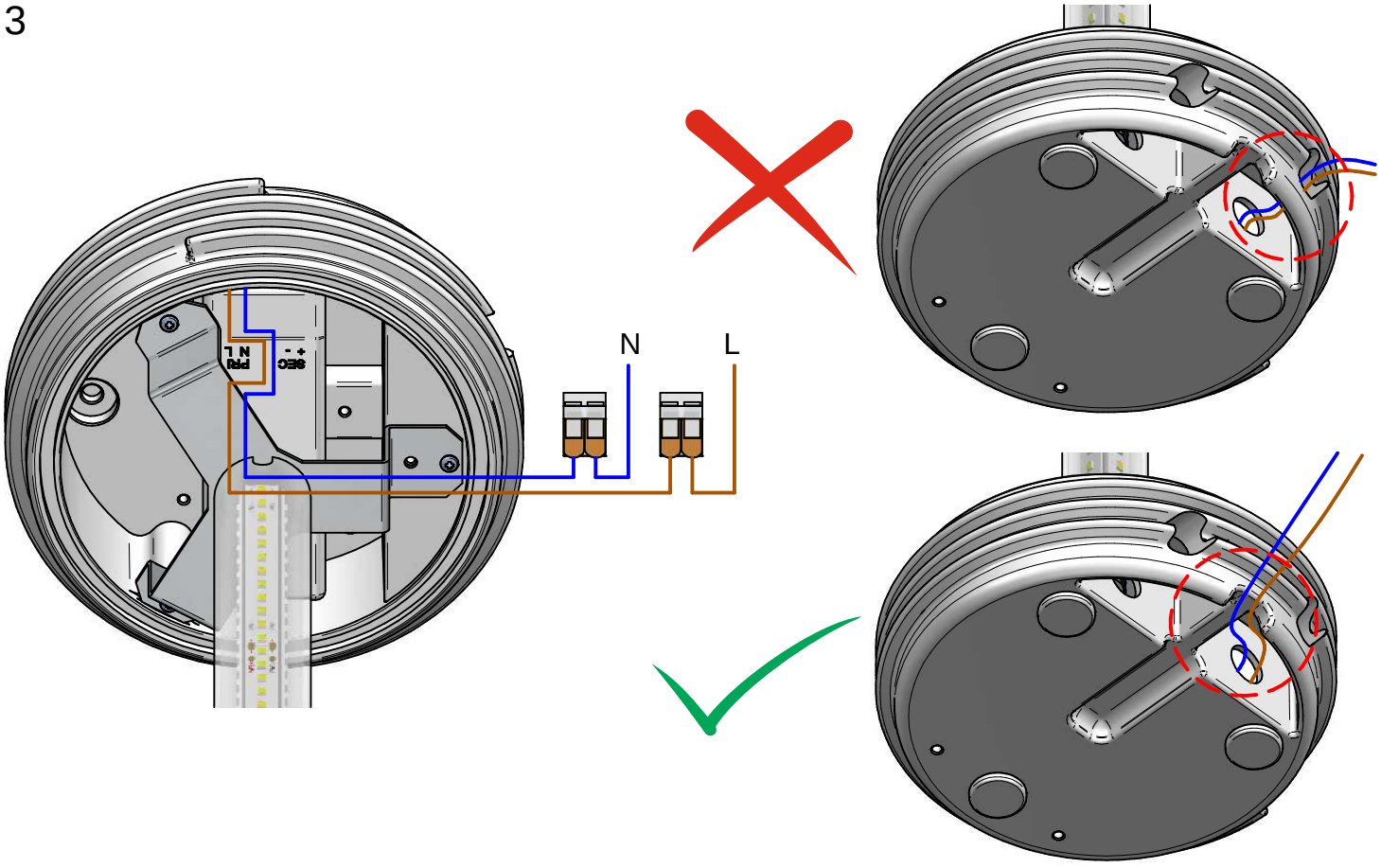

4

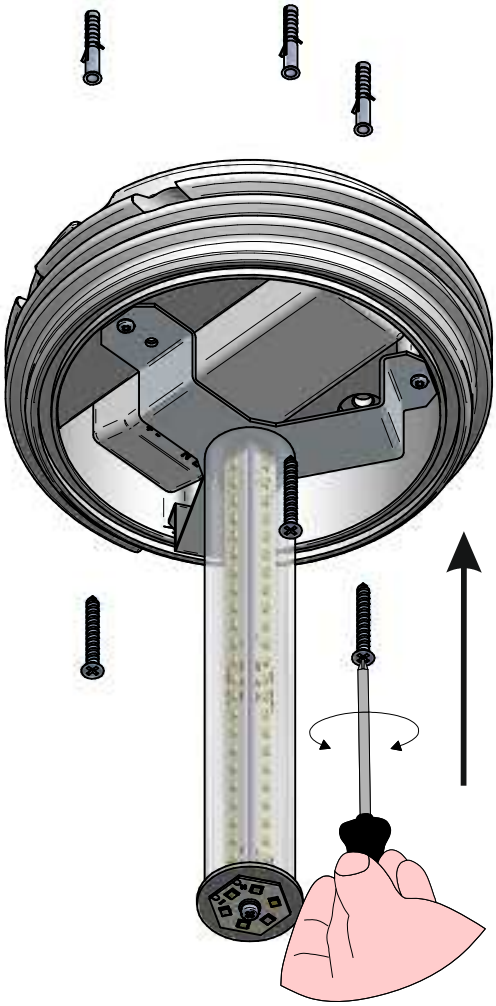

5

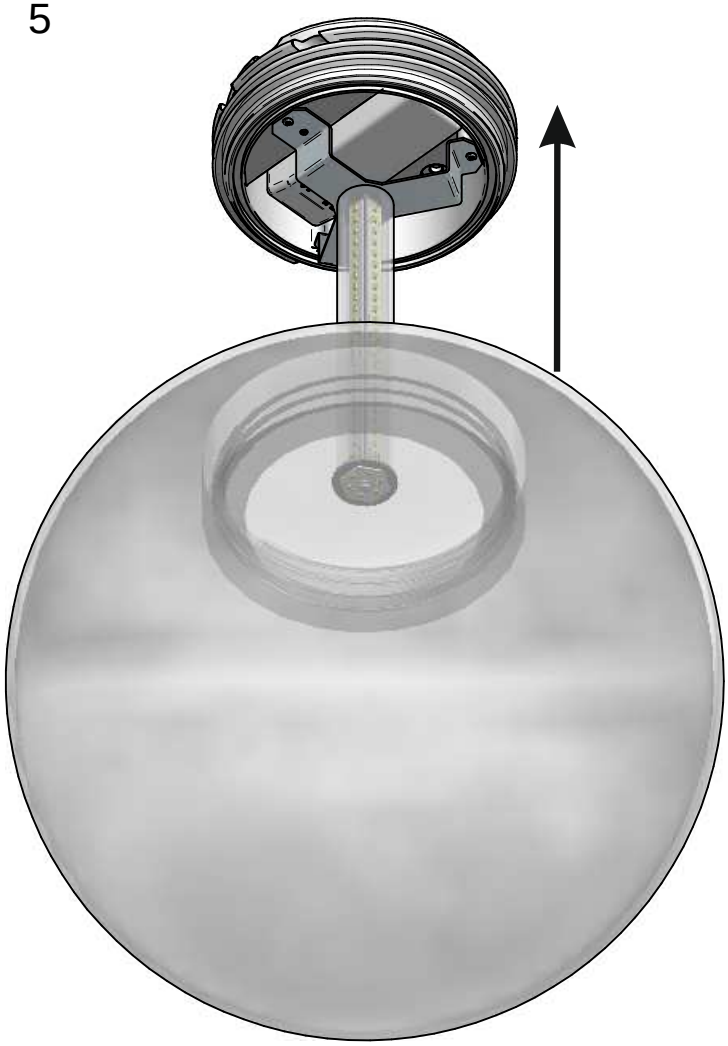

COMPATIBLE ARTICLE

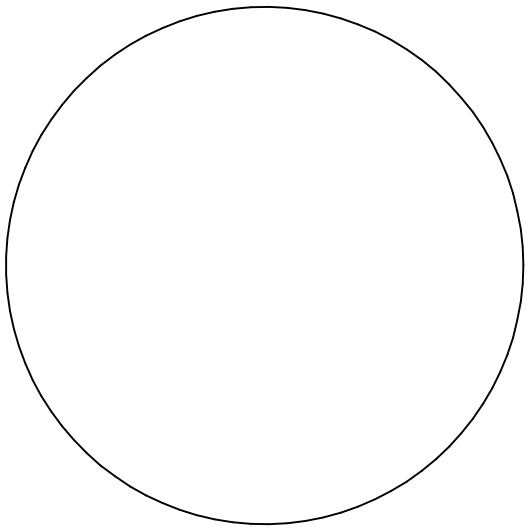

OH!

12132

14235
KIT INDOOR
rev:00

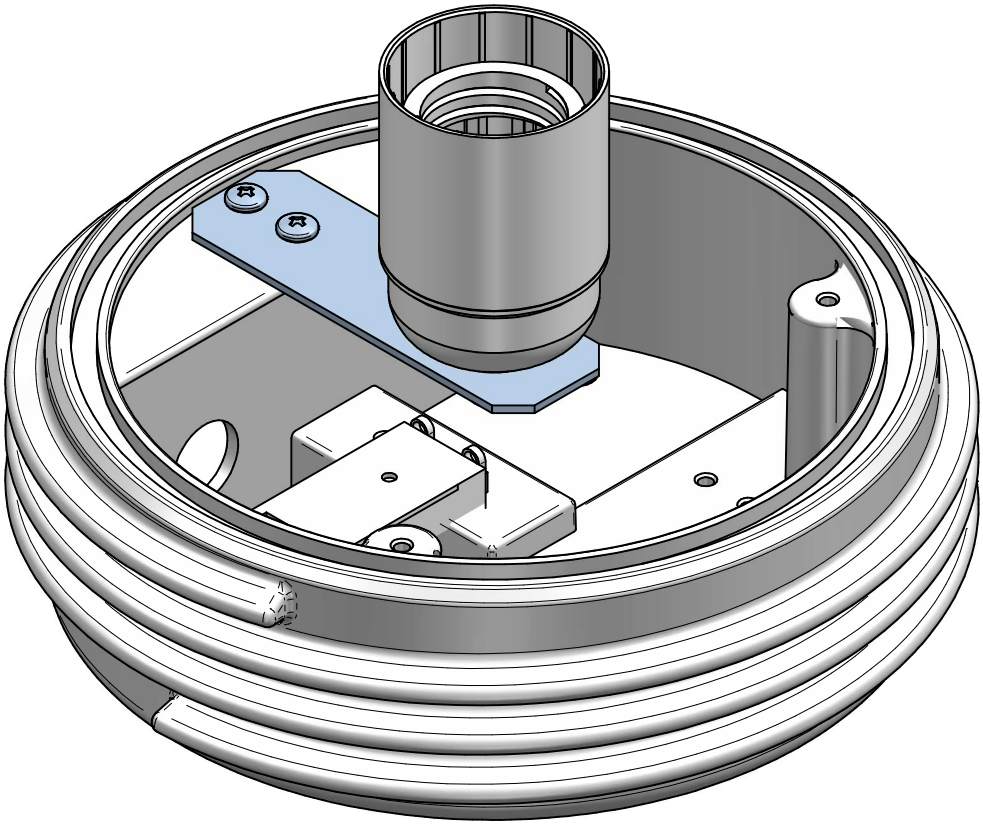

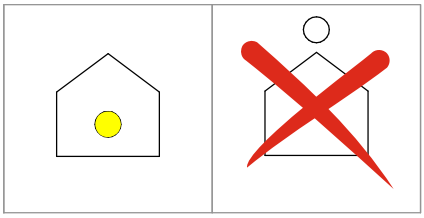

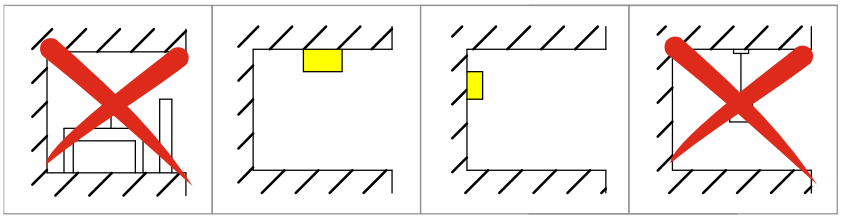

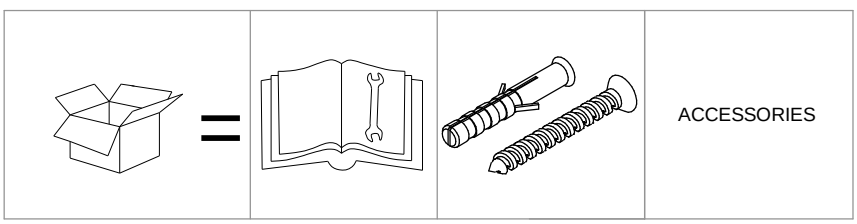

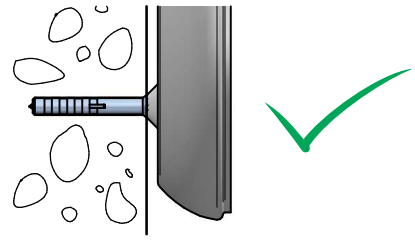

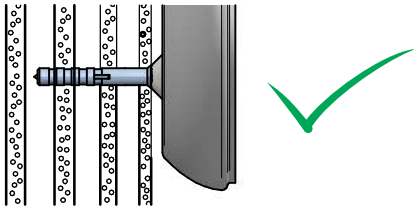

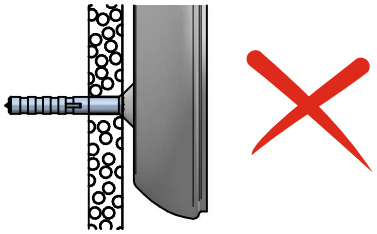

1

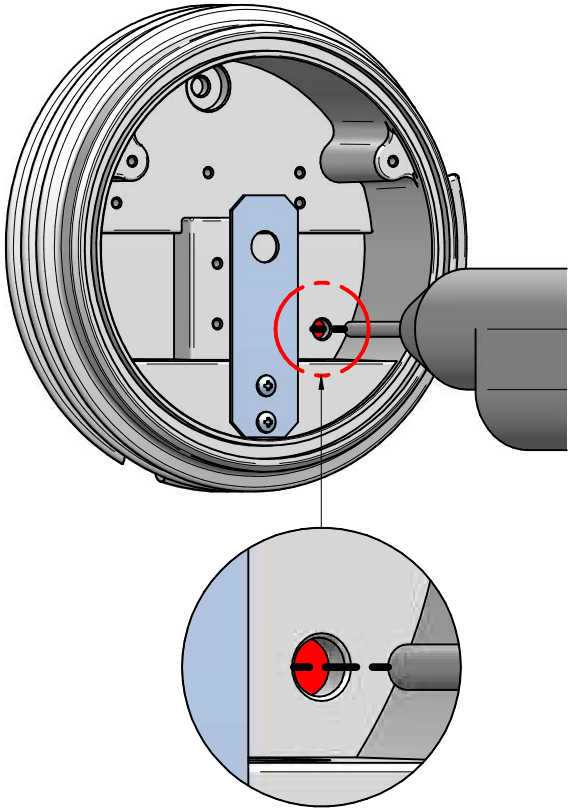

2

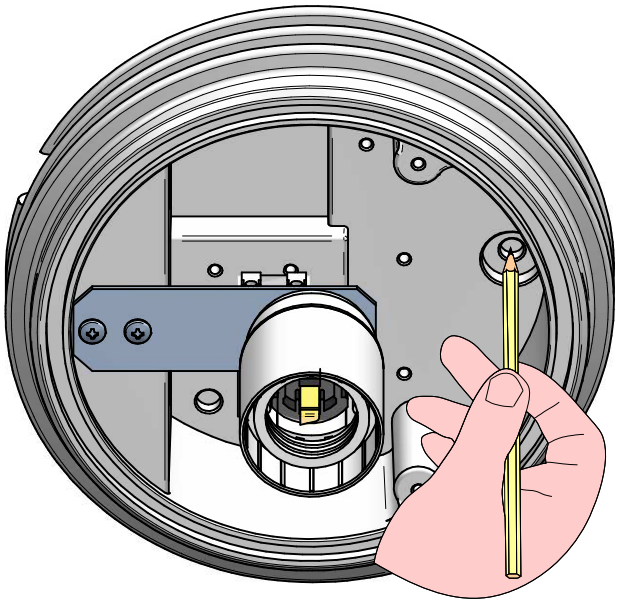

3

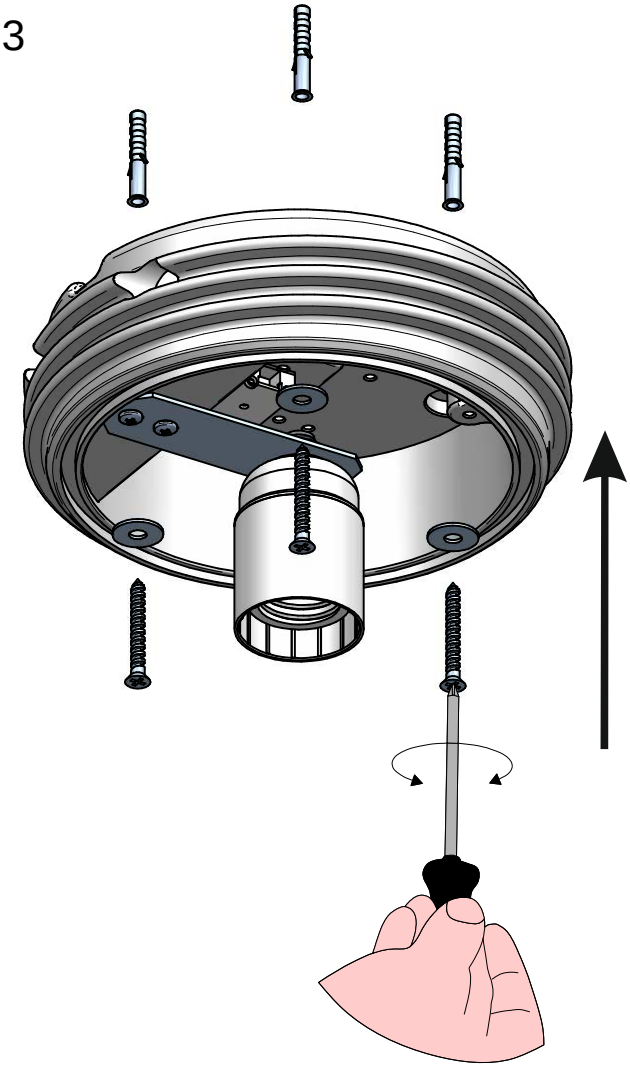

4

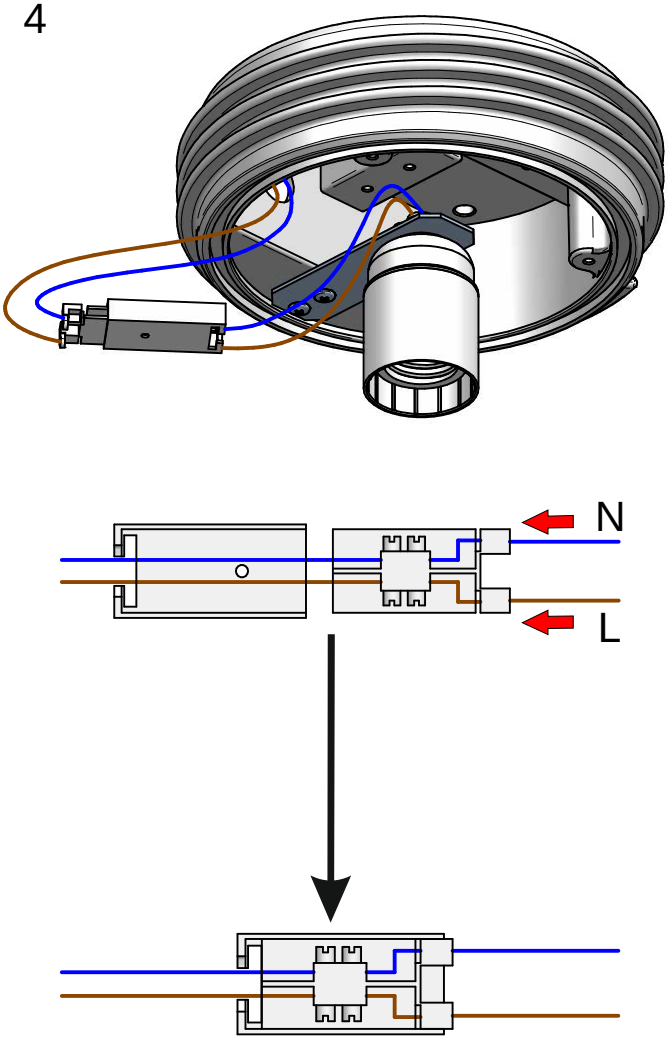

14235
KIT INDOOR
rev:00

linea light Decòrative

5

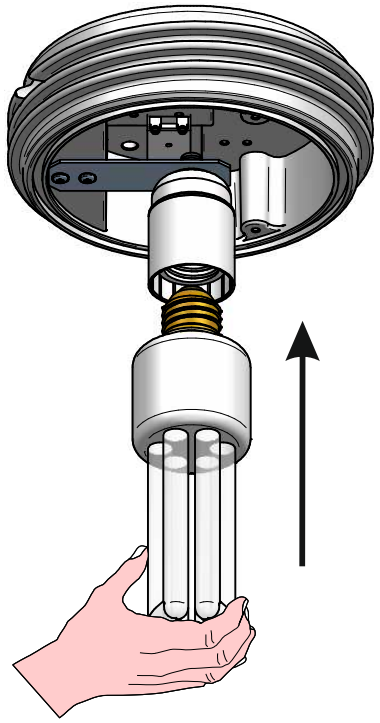

6



	ϕ380mm	ϕ550mm	ϕ750mm
OH! 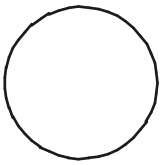	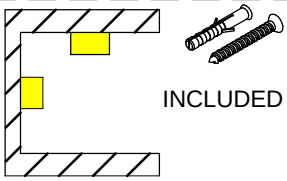 INCLUDED 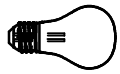 46 W Energy Saver Led lamp 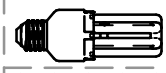 20 W Low Consumption	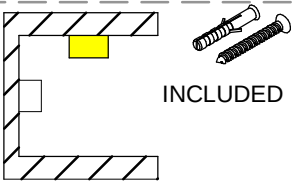 INCLUDED 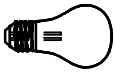 46 W Energy Saver Led lamp 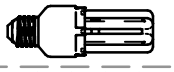 30 W Low Consumption	
OH! SMASH 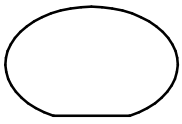	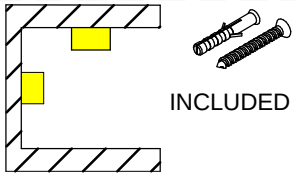 INCLUDED 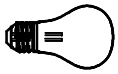 30 W Energy Saver Led lamp 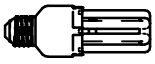 14 W Low Consumption	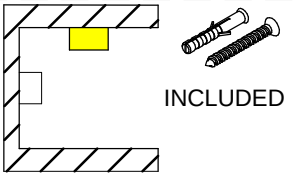 INCLUDED 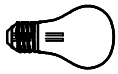 46 W Energy Saver Led lamp 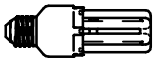 20 W Low Consumption	
OHPS   h 10mm		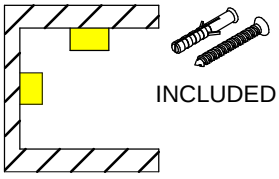 INCLUDED 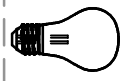 30 W Energy Saver Led lamp 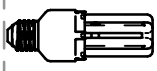 14 W Low Consumption	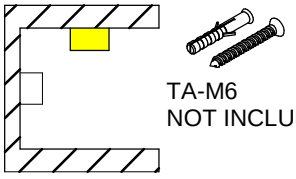 TA-M6 NOT INCLUDED  46 W Energy Saver Led lamp 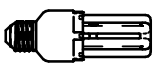 20 W Low Consumption

COMPATIBLE ARTICLE

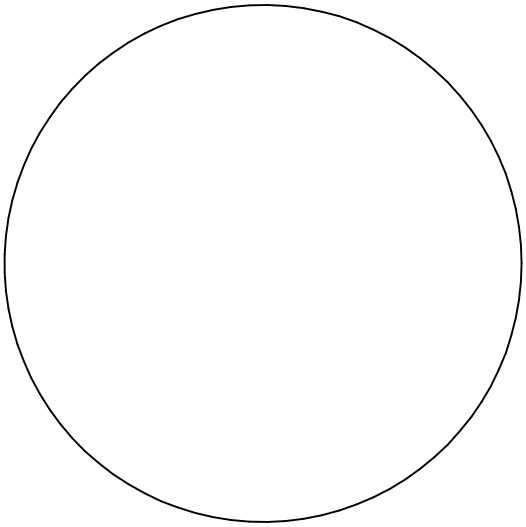

OH!

12124
12126

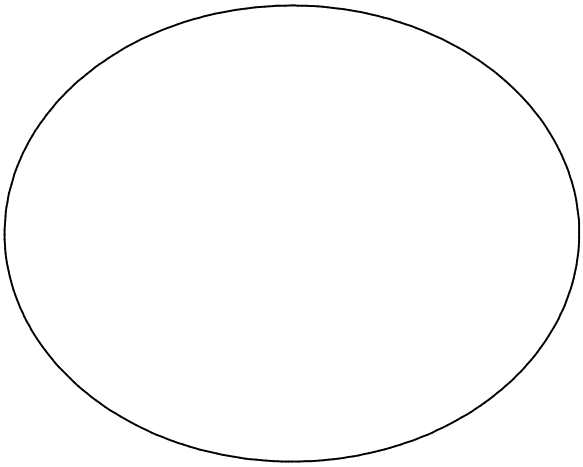

OH! SMASH

12214
12217

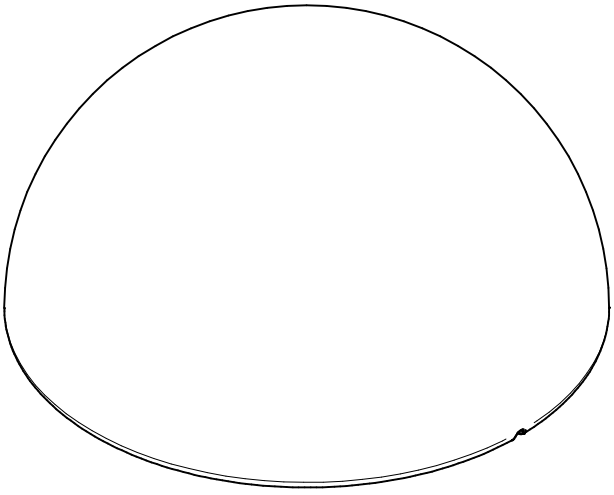

OHPS

12386
12387

14225
KIT INDOOR
rev:00

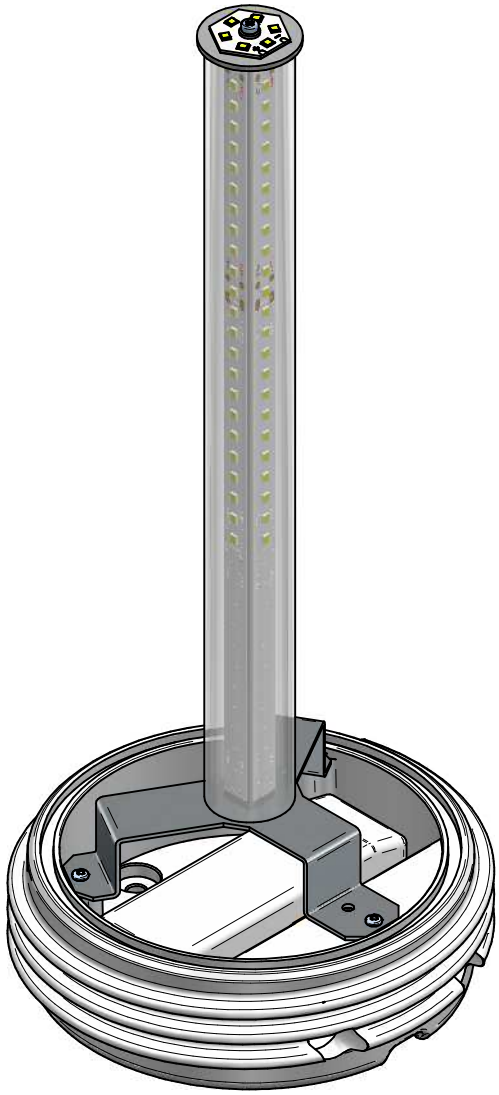

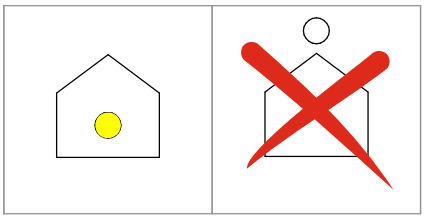

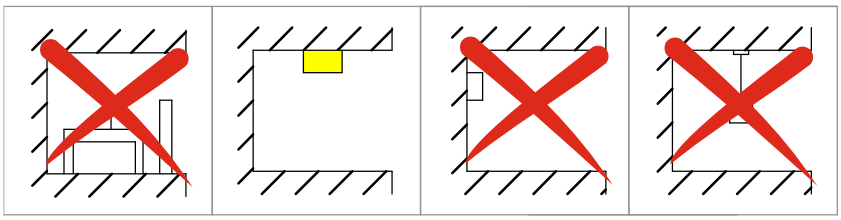

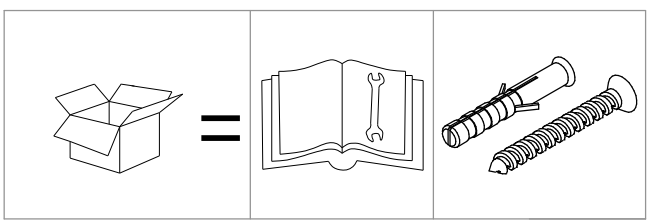

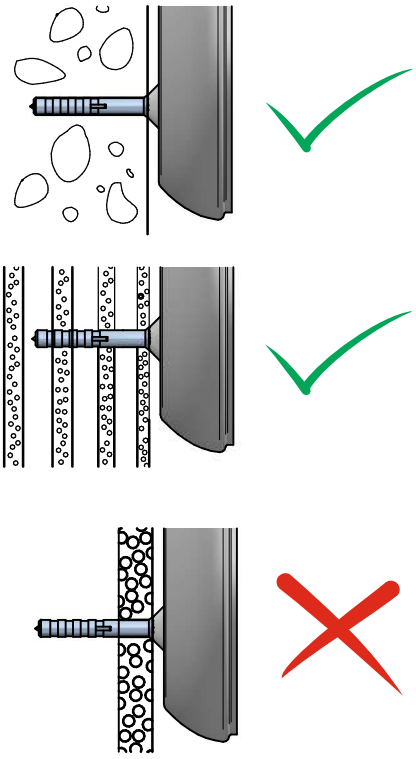

14225
KIT INDOOR
rev:00

1

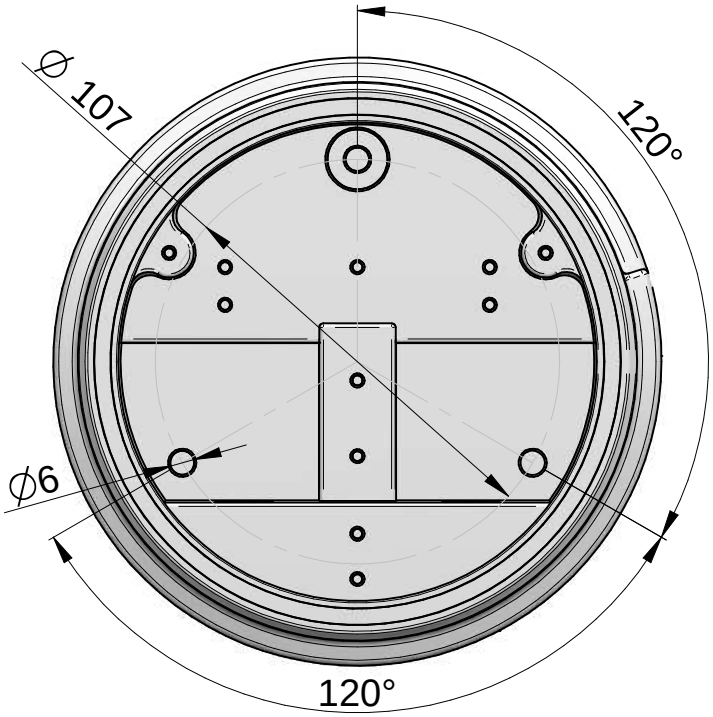

2

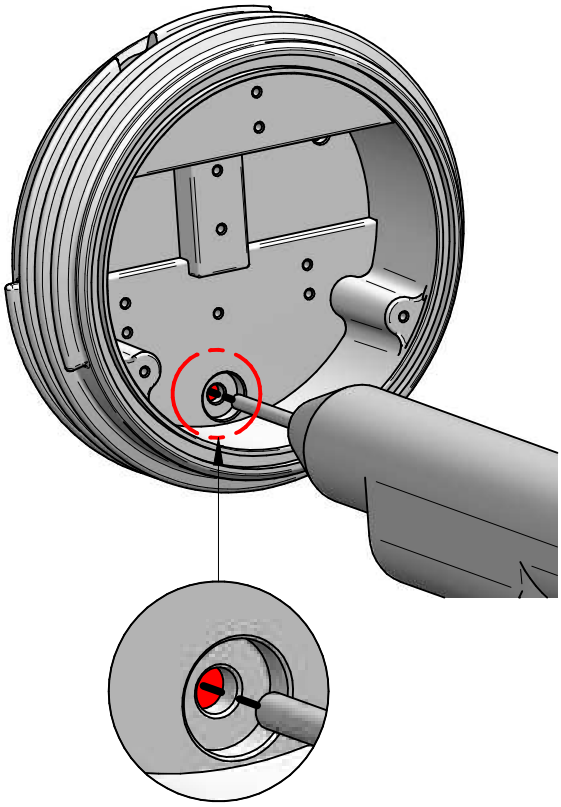

3

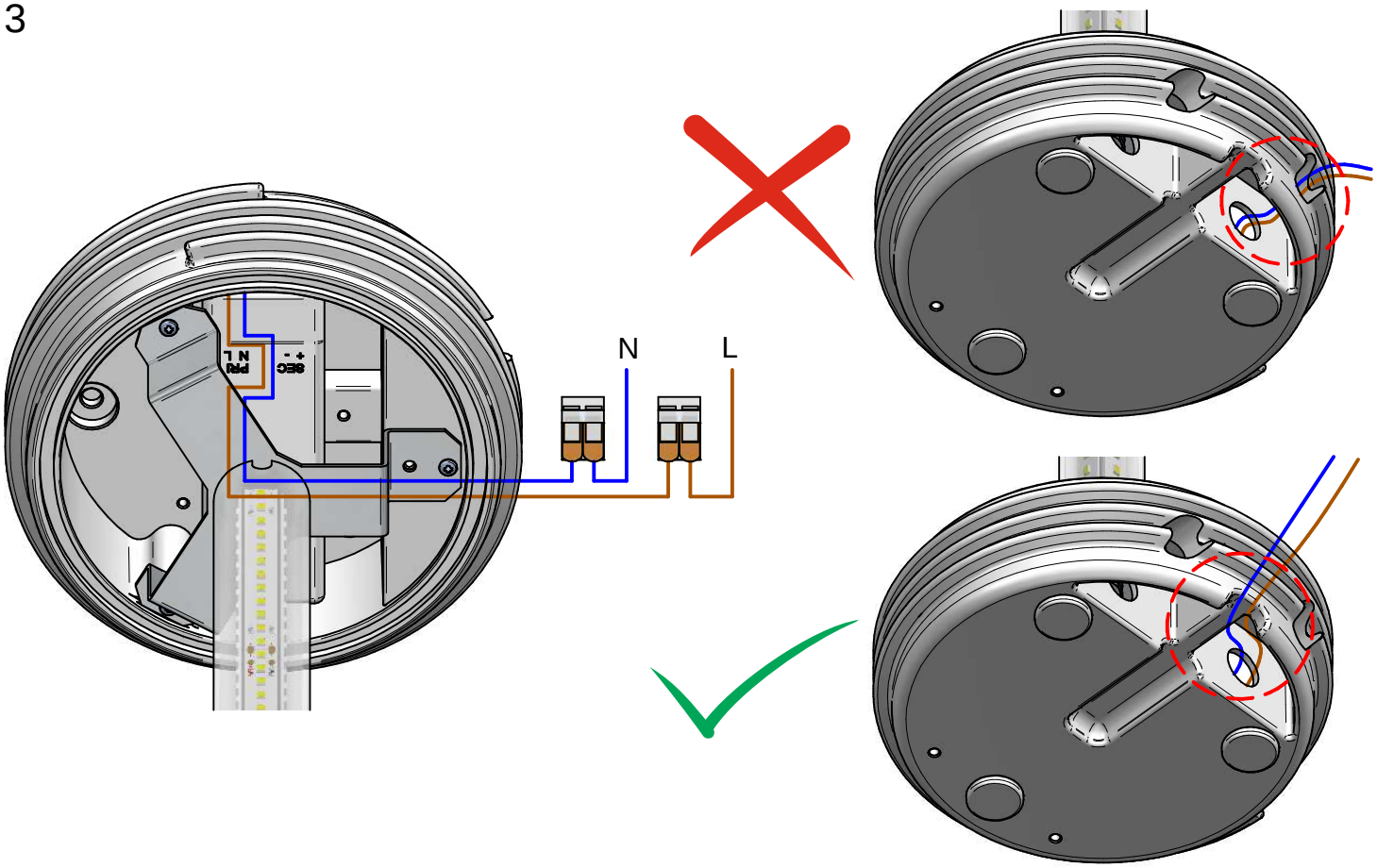

4

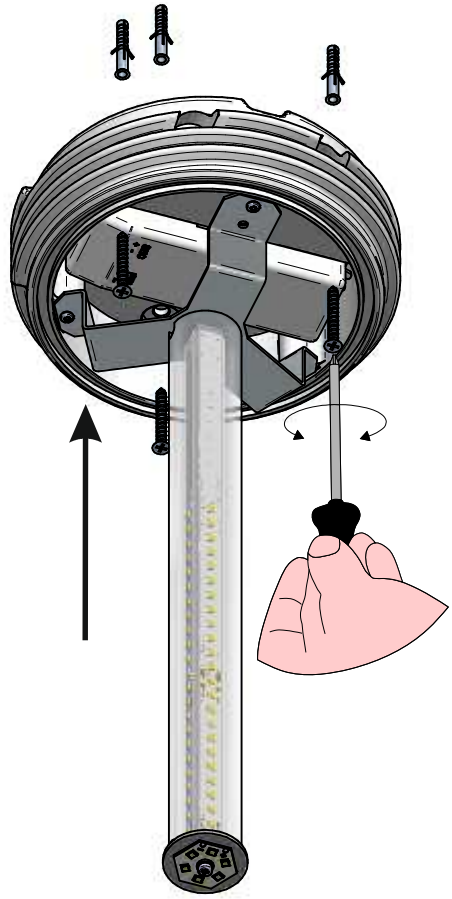

5

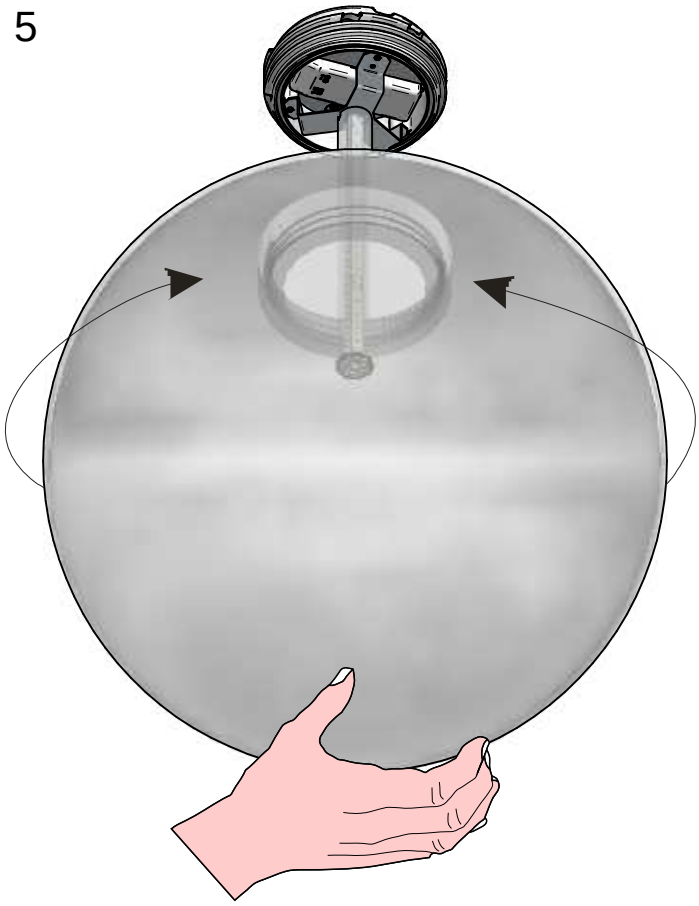

COMPATIBLE ARTICLE

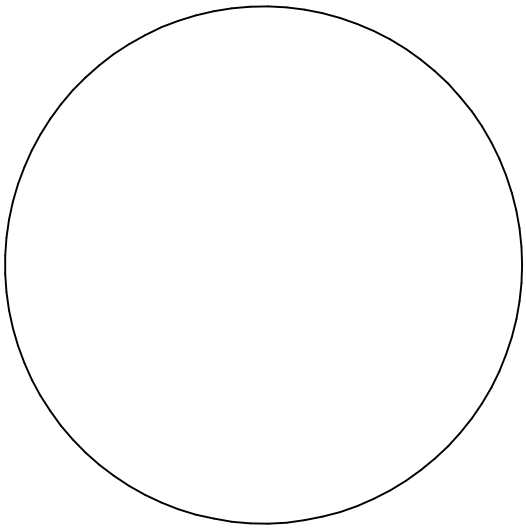

OH!

12133

FGI00588
KIT INDOOR
rev:0

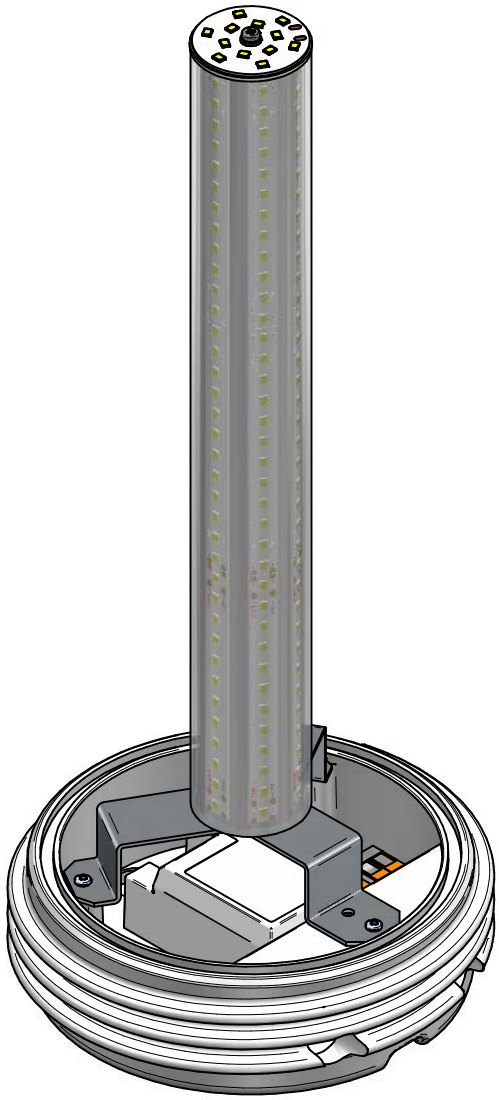

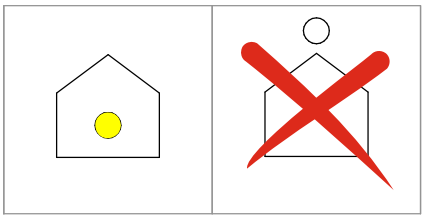

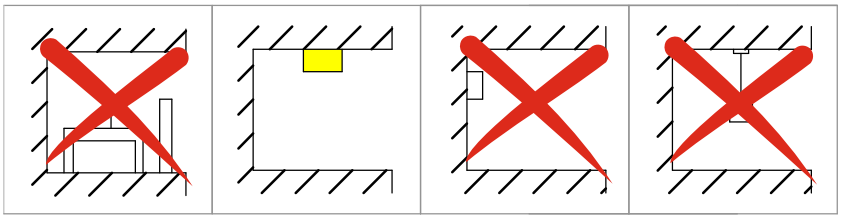

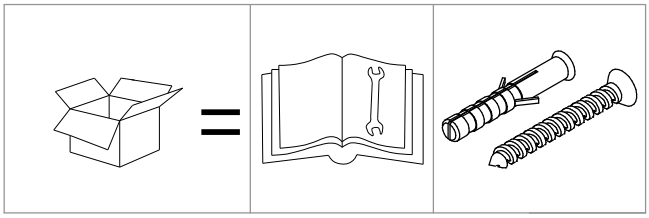

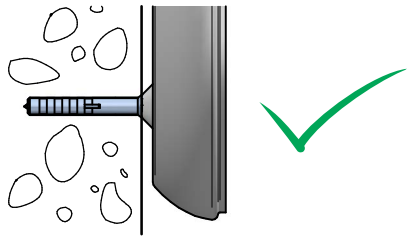

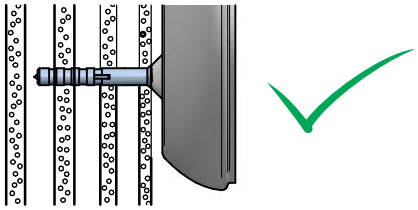

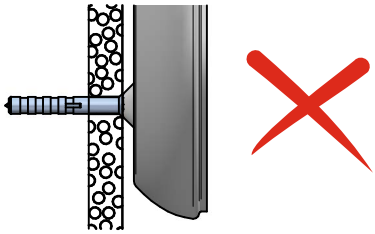

FGI00588
KIT INDOOR
rev:0

1

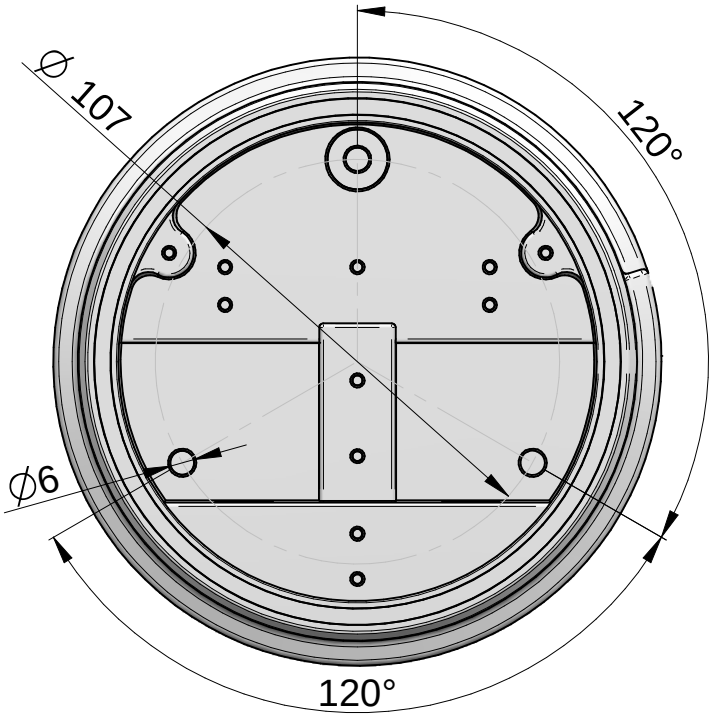

2

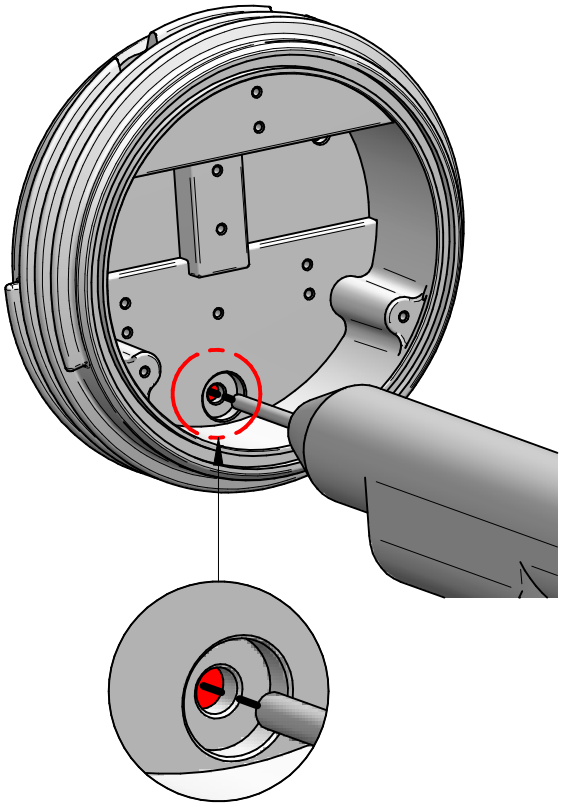

3

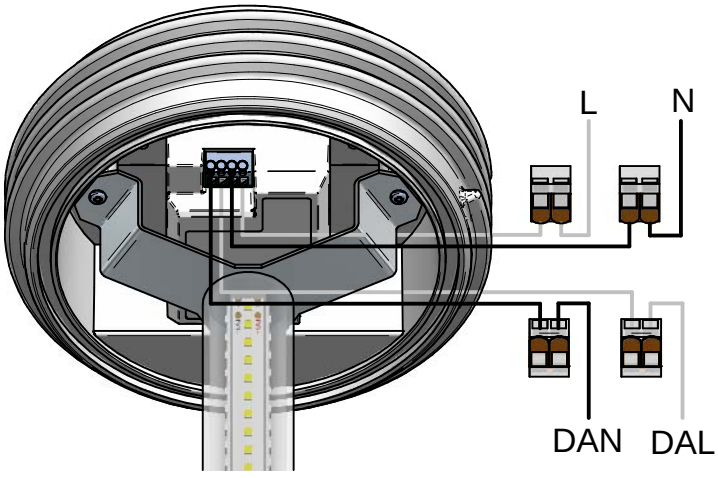

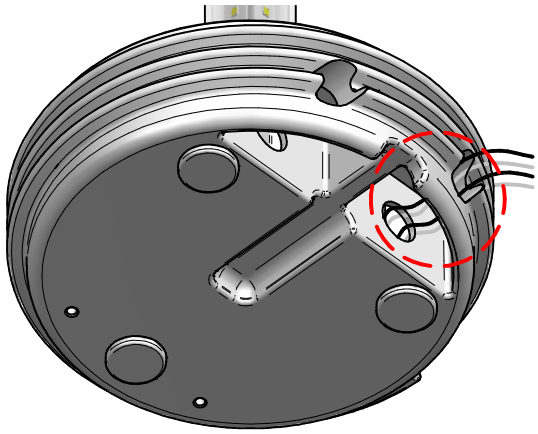

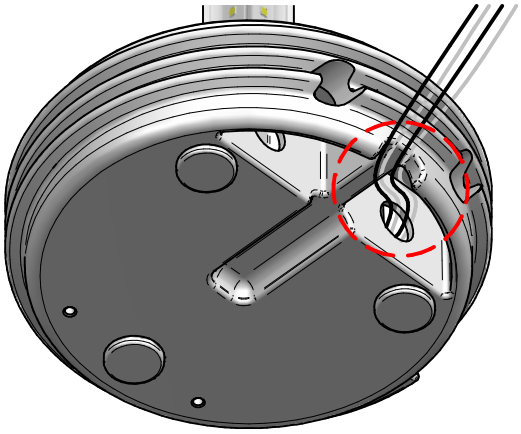

4

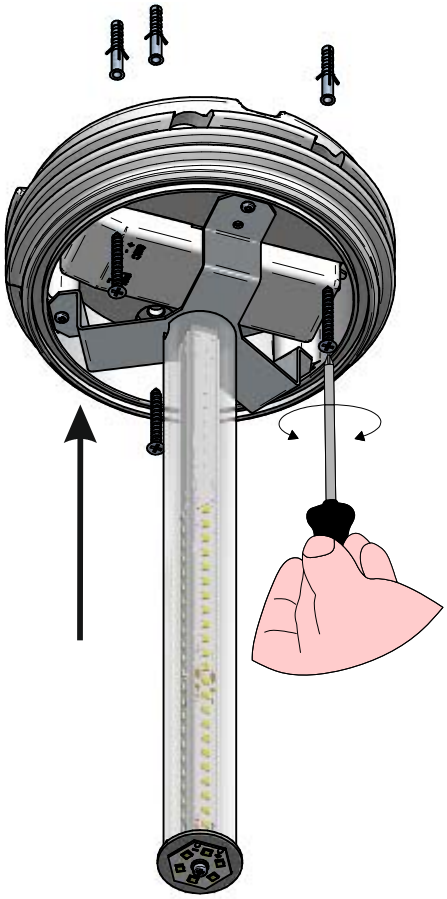

5

