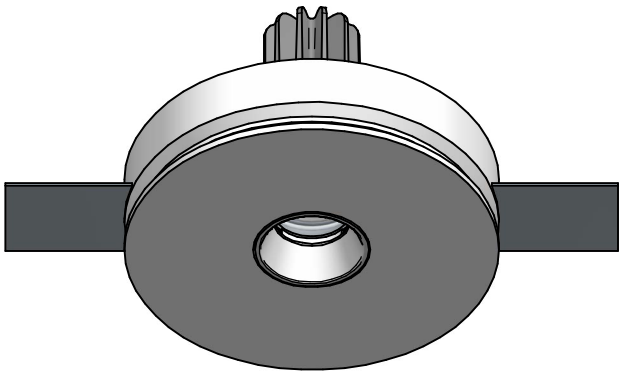

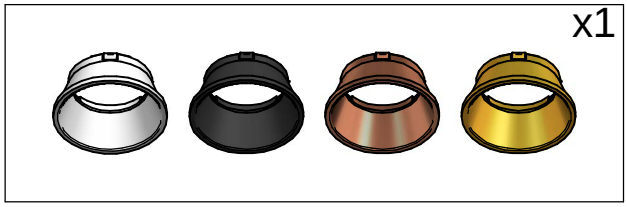

Code	Led	Lens	Driver type	Power
CA029AWHWFL	3000K	24°	ON/OFF	8W
CA029AWHMFL	2700K	24°	ON/OFF	8W
CA029AWHWMW	3000K	42°	ON/OFF	8W
CA029AWHMMW	2700K	42°	ON/OFF	8W
CA030AWHWFL	3000K	24°	ON/OFF	12W
CA030AWHMFL	2700K	24°	ON/OFF	12W
CA030AWHWMW	3000K	42°	ON/OFF	12W
CA030AWHMMW	2700K	42°	ON/OFF	12W
CA030JWHWFL	3000K	24°	Class III	12W
CA030JWHMFL	2700K	24°	Class III	12W
CA030JWHWMW	3000K	42°	Class III	12W
CA030JWHMMW	2700K	42°	Class III	12W

Pag. 3 - 7

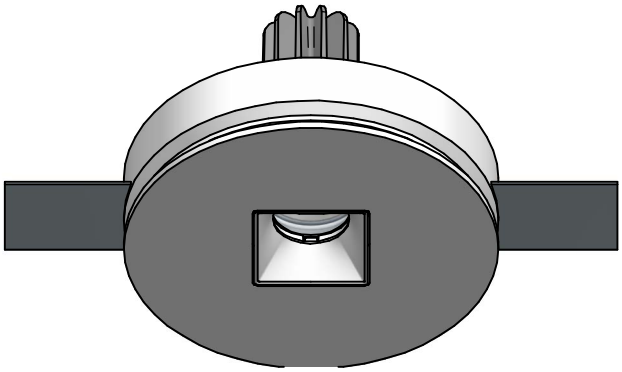

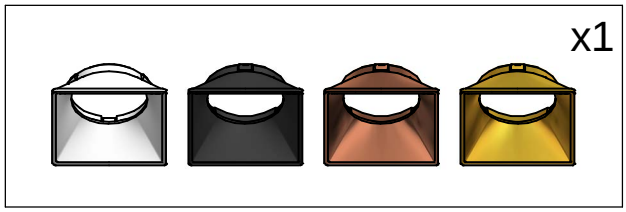

Code	Led	Lens	Driver type	Power
CA031AWHWFL	3000K	24°	ON/OFF	8W
CA031AWHMFL	2700K	24°	ON/OFF	8W
CA031AWHWMW	3000K	42°	ON/OFF	8W
CA031AWHMMW	2700K	42°	ON/OFF	8W
CA032AWHWFL	3000K	24°	ON/OFF	12W
CA032AWHMFL	2700K	24°	ON/OFF	12W
CA032AWHWMW	3000K	42°	ON/OFF	12W
CA032AWHMMW	2700K	42°	ON/OFF	12W
CA032JWHWFL	3000K	24°	Class III	12W
CA032JWHMFL	2700K	24°	Class III	12W
CA032JWHWMW	3000K	42°	Class III	12W
CA032JWHMMW	2700K	42°	Class III	12W

Pag. 3 - 7

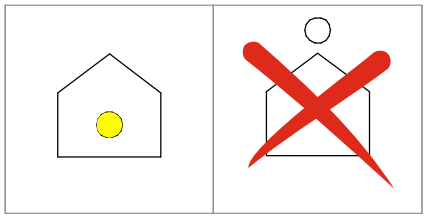

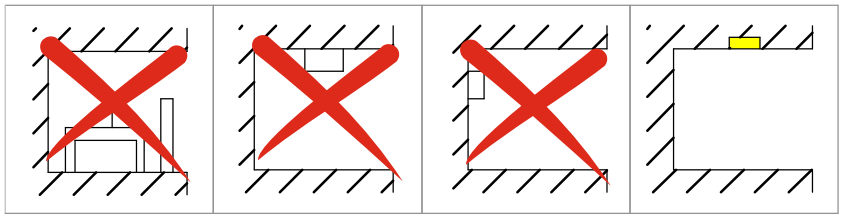

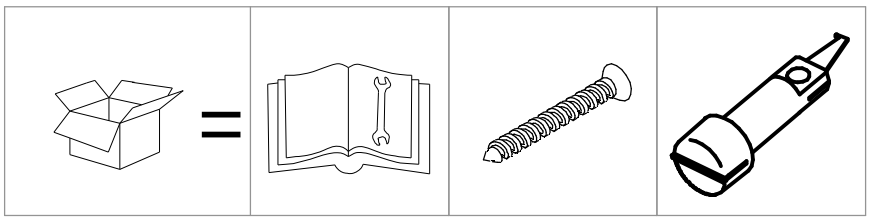

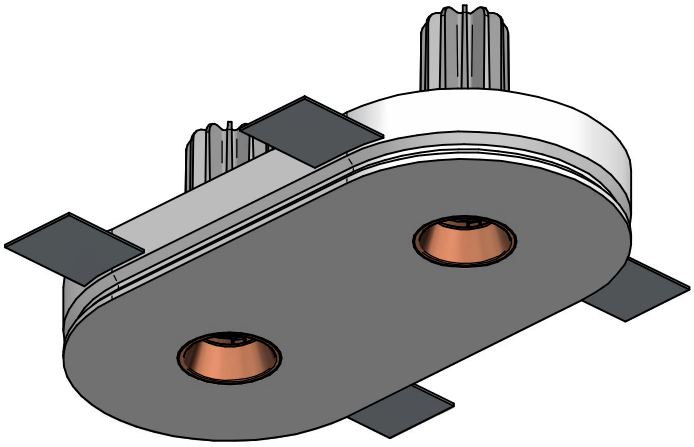

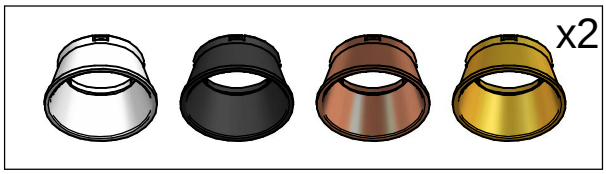

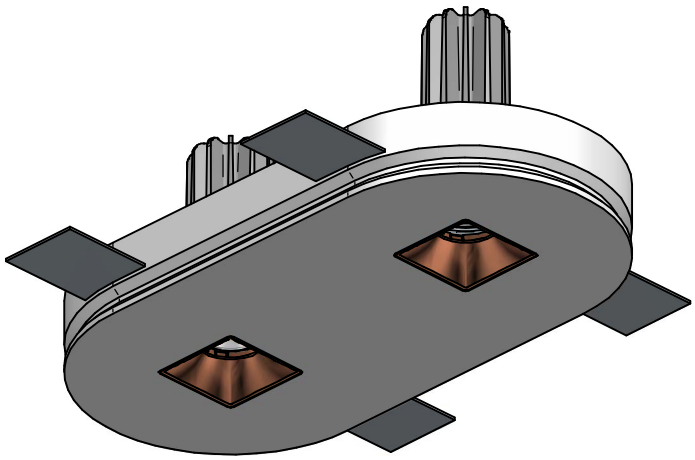

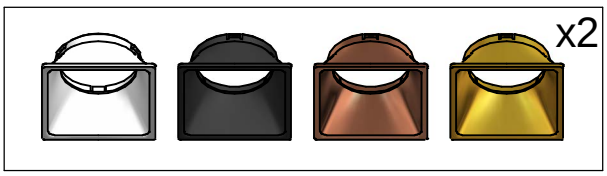

Code	Led	Lens	Driver type	Power
CA033AWHWFL	3000K	24°	ON/OFF	8W x2
CA033AWHMFL	2700K	24°	ON/OFF	8W x2
CA033AWHWMW	3000K	42°	ON/OFF	8W x2
CA033AWHMMW	2700K	42°	ON/OFF	8W x2

Code	Led	Lens	Driver type	Power
CA034AWHWFL	3000K	24°	ON/OFF	8W x2
CA034AWHMFL	2700K	24°	ON/OFF	8W x2
CA034AWHWMW	3000K	42°	ON/OFF	8W x2
CA034AWHMMW	2700K	42°	ON/OFF	8W x2

Pag. 9 - 13

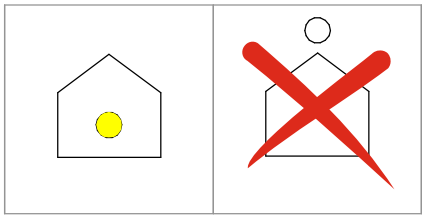

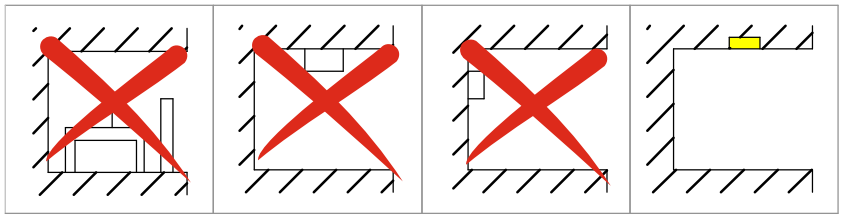

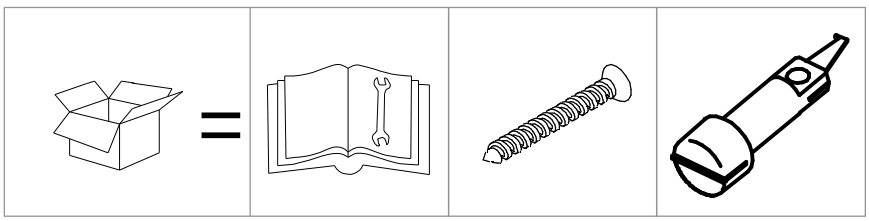

1A

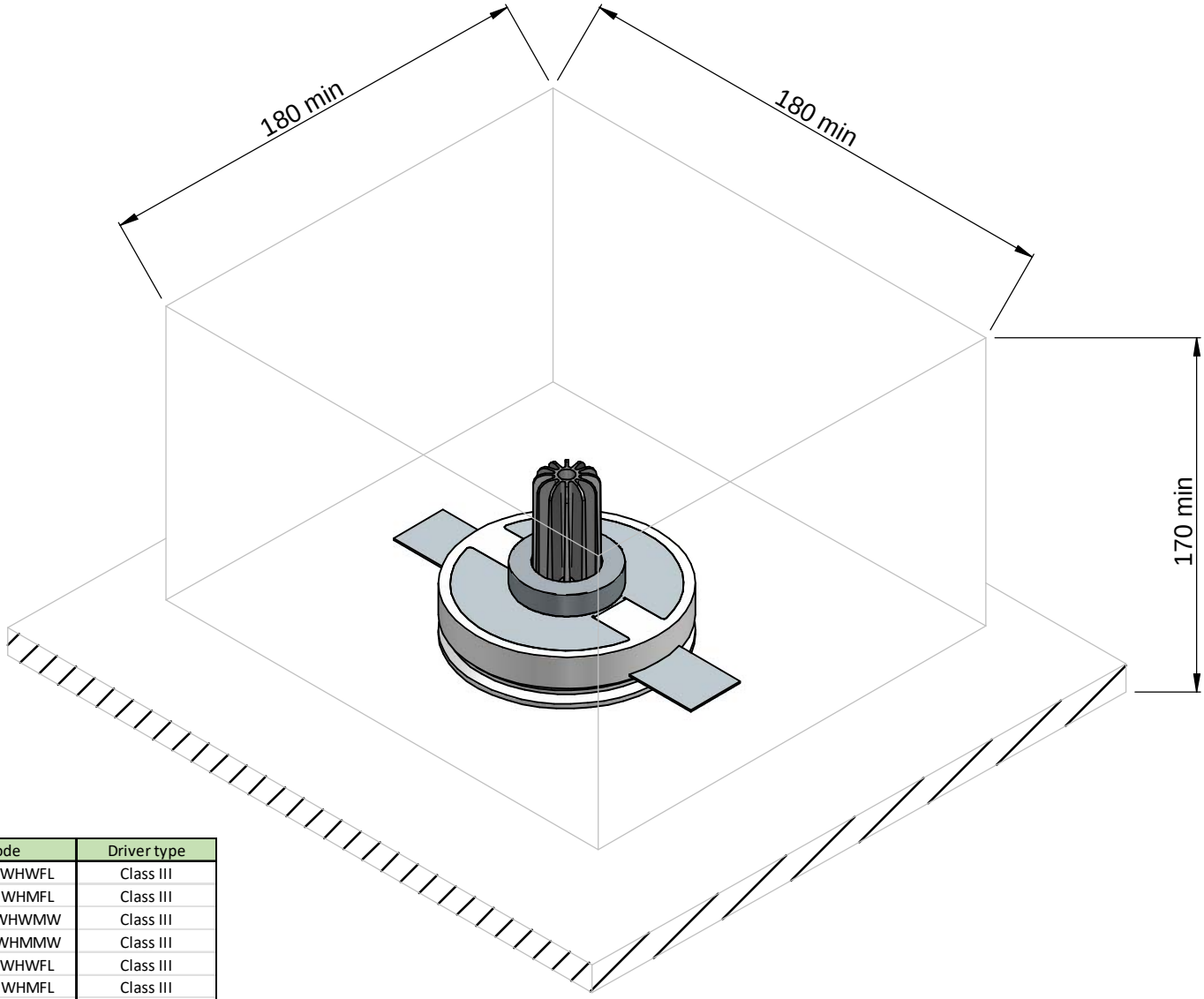

Code	Driver type
CA030JWHWFL	Class III
CA030JWHMFL	Class III
CA030JWHWMW	Class III
CA030JWHMMW	Class III
CA032JWHWFL	Class III
CA032JWHMFL	Class III
CA032JWHWMW	Class III
CA032JWHMMW	Class III

2A

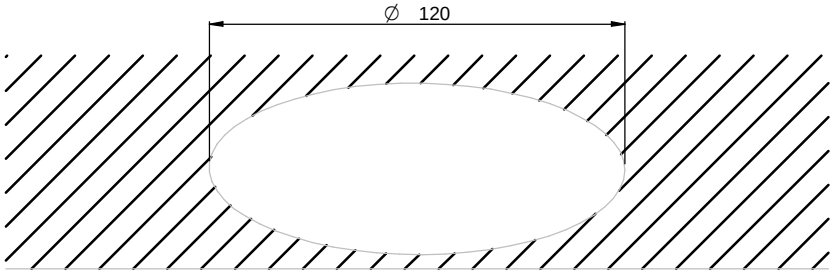

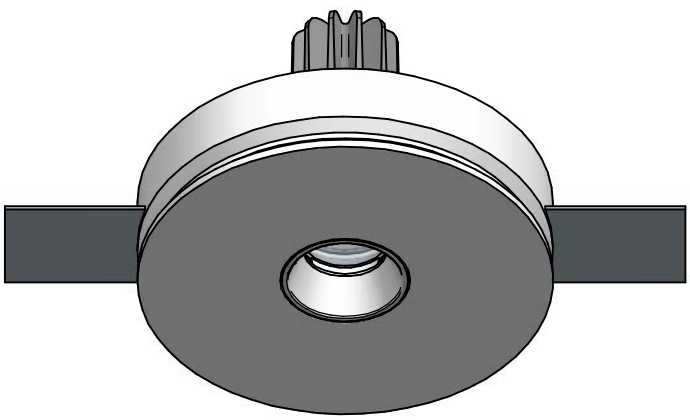

Code	Driver type	Power
CA029AWHWFL	ON/OFF	8W
CA029AWHMFL	ON/OFF	8W
CA029AWHWMW	ON/OFF	8W
CA029AWHMMW	ON/OFF	8W
CA030AWHWFL	ON/OFF	12W
CA030AWHMFL	ON/OFF	12W
CA030AWHWMW	ON/OFF	12W
CA030AWHMMW	ON/OFF	12W
CA031AWHWFL	ON/OFF	8W
CA031AWHMFL	ON/OFF	8W
CA031AWHWMW	ON/OFF	8W
CA031AWHMMW	ON/OFF	8W
CA032AWHWFL	ON/OFF	12W
CA032AWHMFL	ON/OFF	12W
CA032AWHWMW	ON/OFF	12W
CA032AWHMMW	ON/OFF	12W

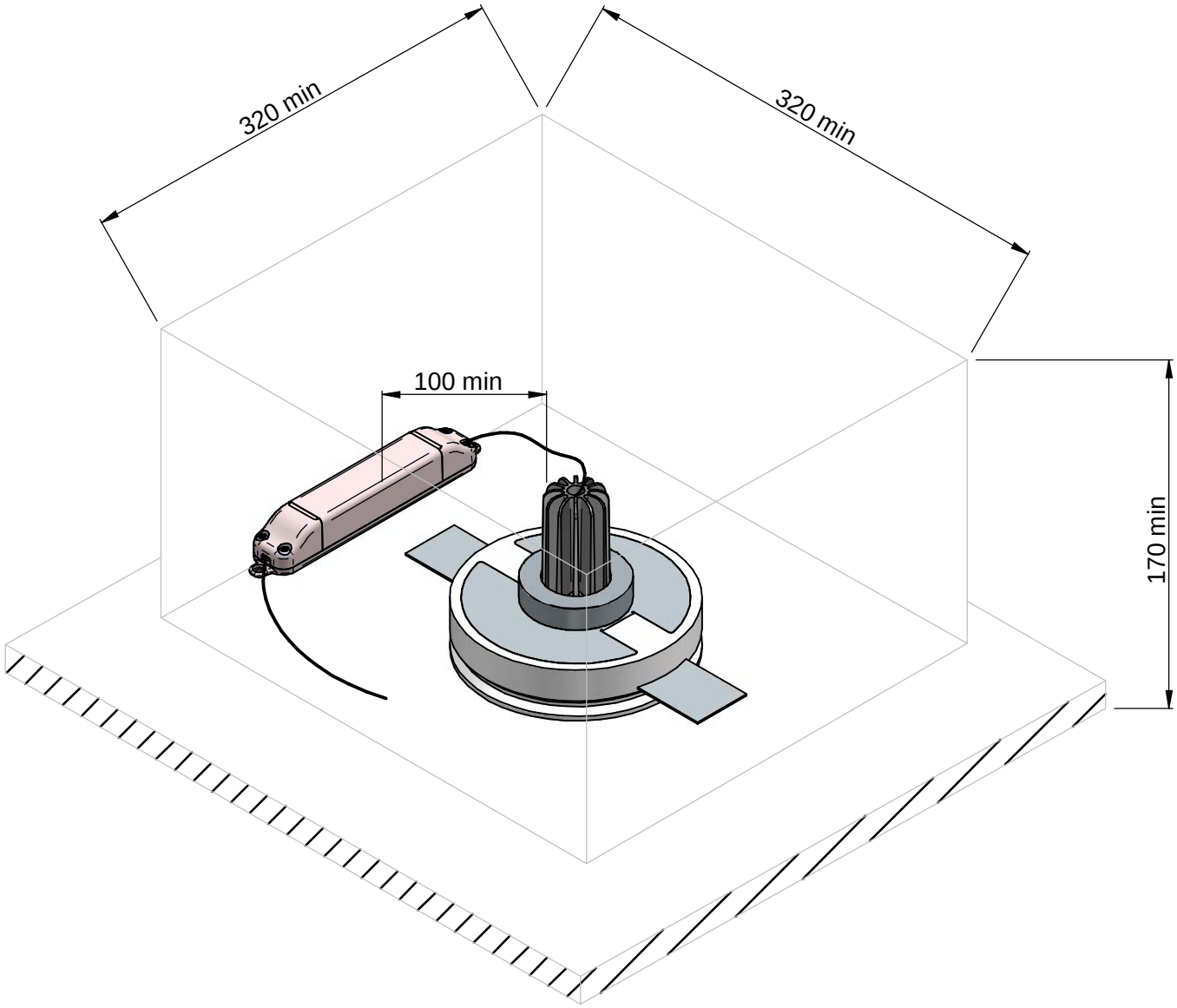

3A

Code	Power
CA029AWHWFL	8W
CA029AWHMFL	8W
CA029AWHWMW	8W
CA029AWHMMW	8W
CA030AWHWFL	12W
CA030AWHMFL	12W
CA030AWHWMW	12W
CA030AWHMMW	12W
CA031AWHWFL	8W
CA031AWHMFL	8W
CA031AWHWMW	8W
CA031AWHMMW	8W
CA032AWHWFL	12W
CA032AWHMFL	12W
CA032AWHWMW	12W
CA032AWHMMW	12W

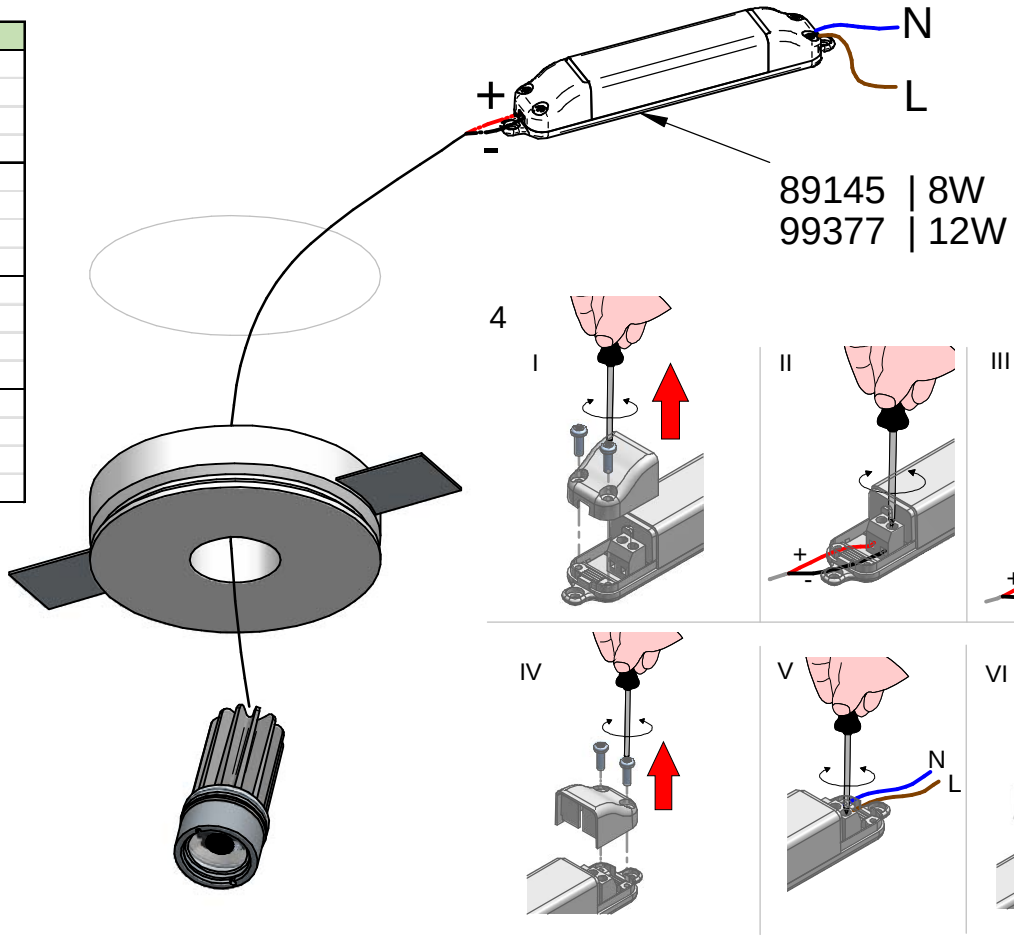

KIT0097 - MAX 9 LED (NOT INCLUDED)

Code	Code	Power
CA030JWHWFL	CA032JWHWFL	12W
CA030JWHMFL	CA032JWHMFL	12W
CA030JWHWMW	CA032JWHWMW	12W
CA030JWHMMW	CA032JWHMMW	12W

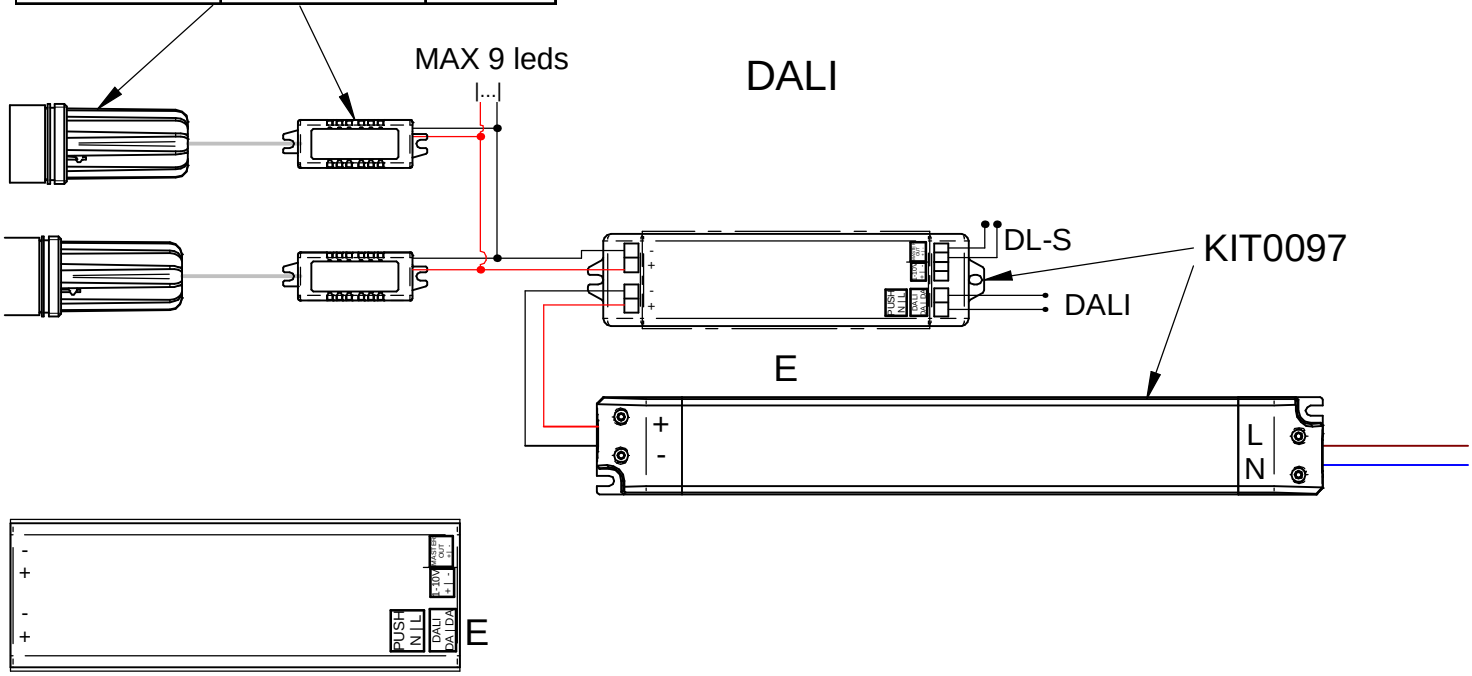

1-10V

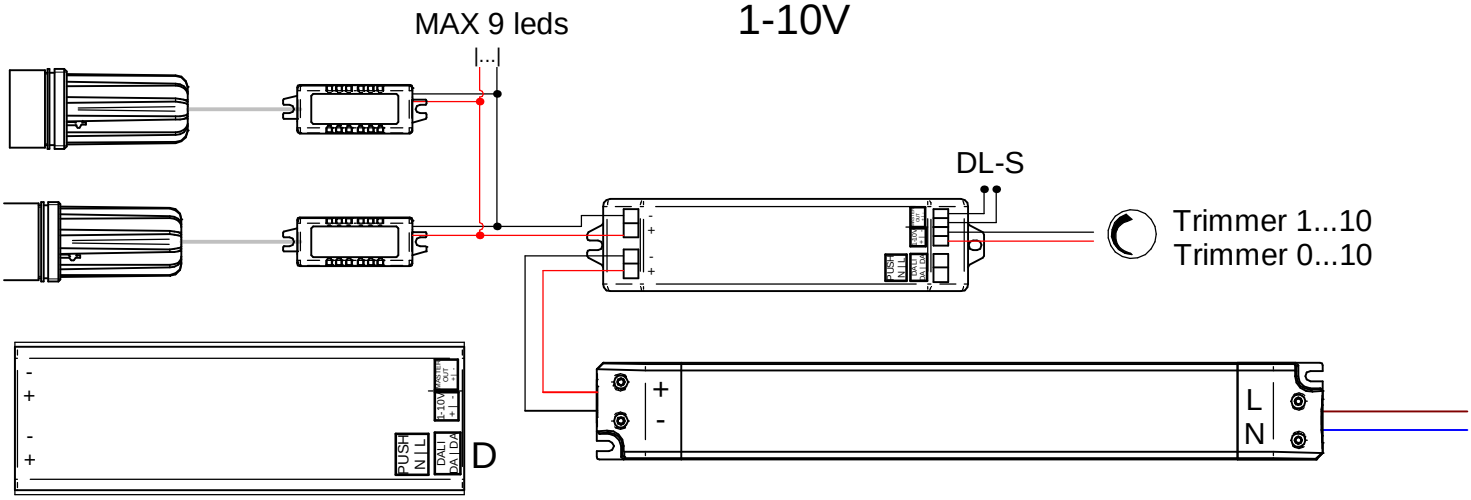
MAX 9 leds
DL-S
Trimmer 1...10
Trimmer 0...10
D
L
N

PUSH

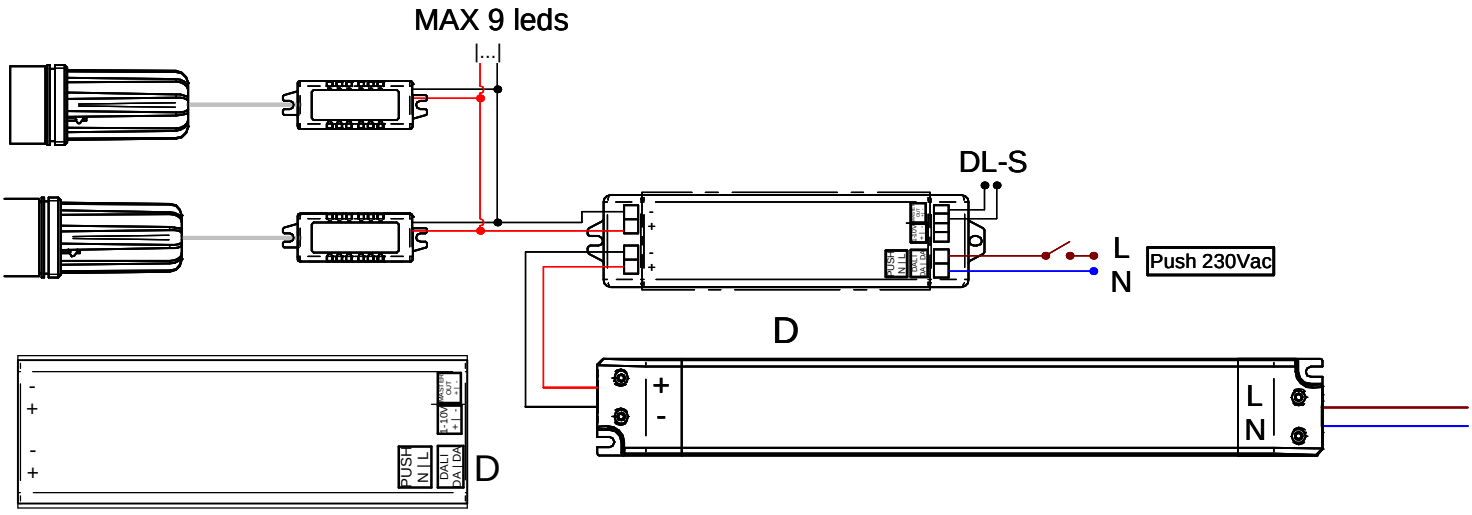
MAX 9 leds
DL-S
L
N
Push 230Vac
D

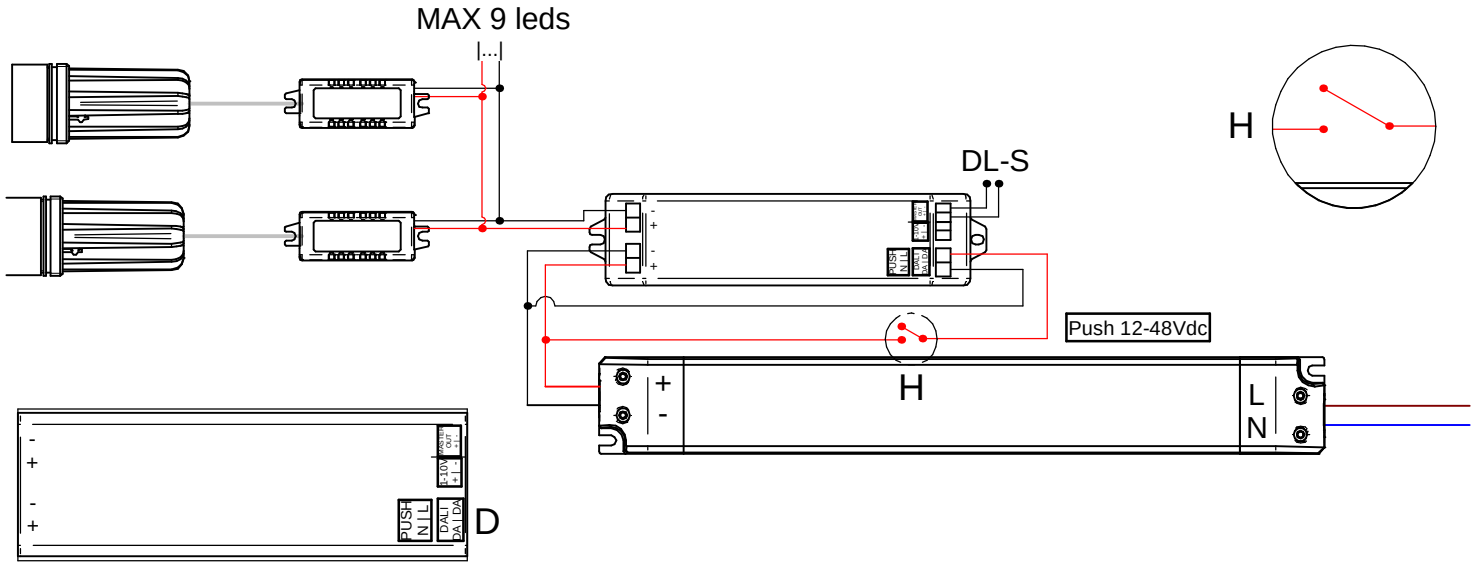
MAX 9 leds
H
DL-S
Push 12-48Vdc
H
D
L
N

5A

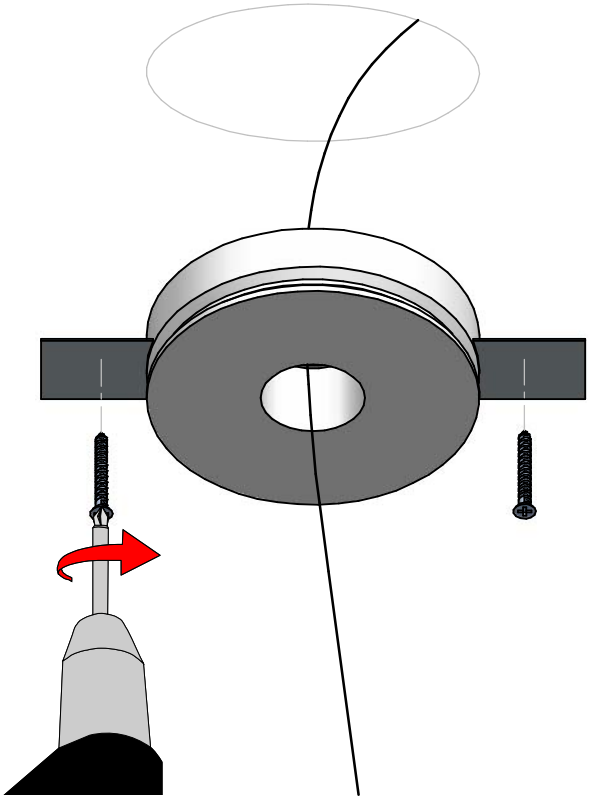

6A

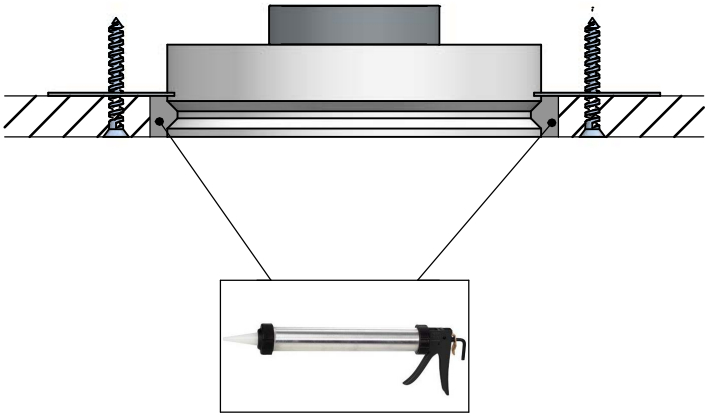

7A

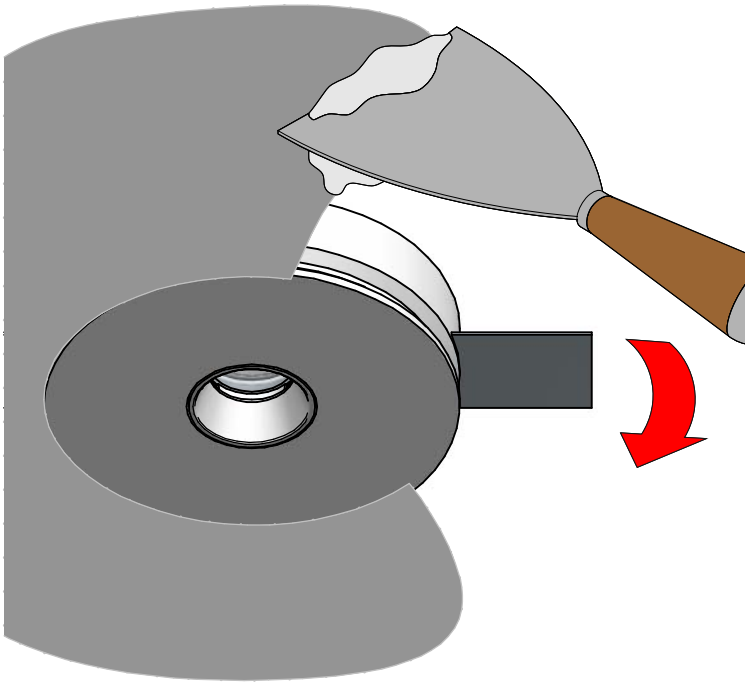

8A

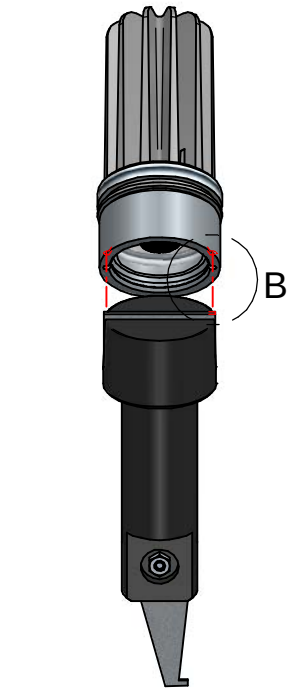

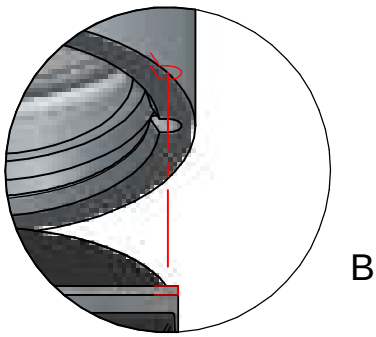

9A

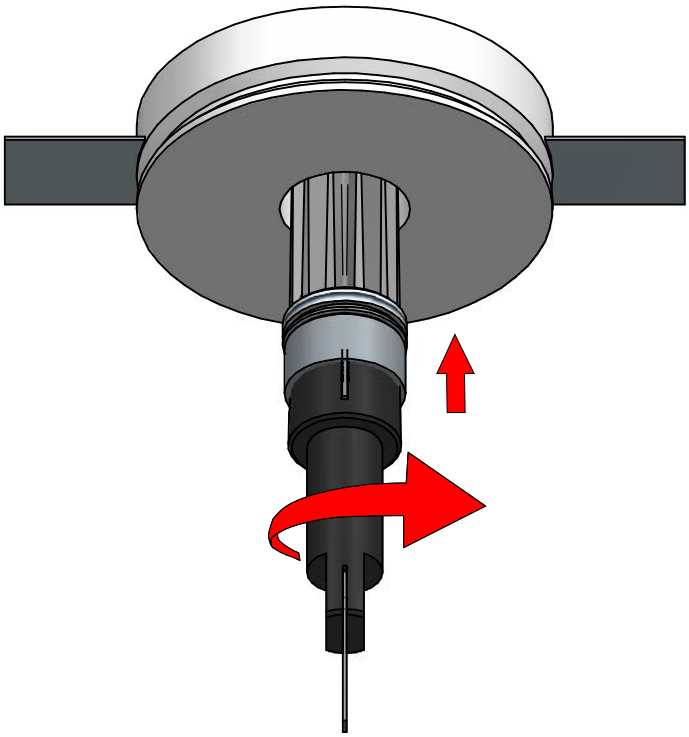

10A

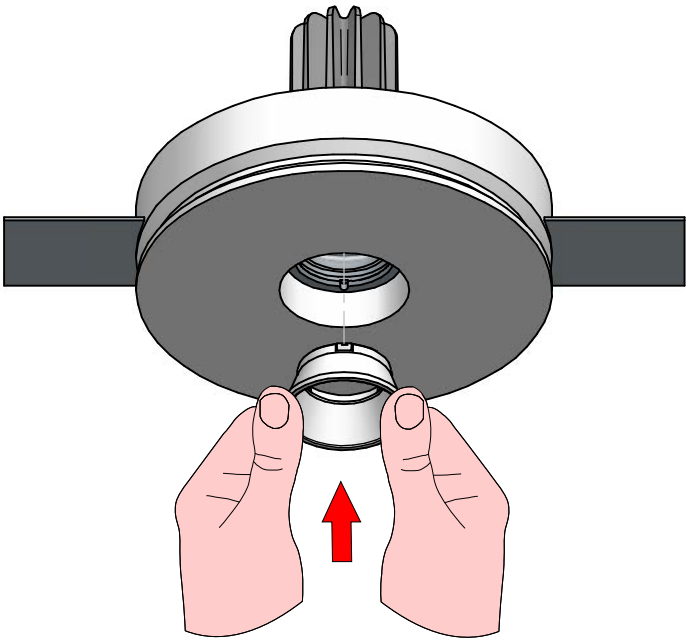

11A

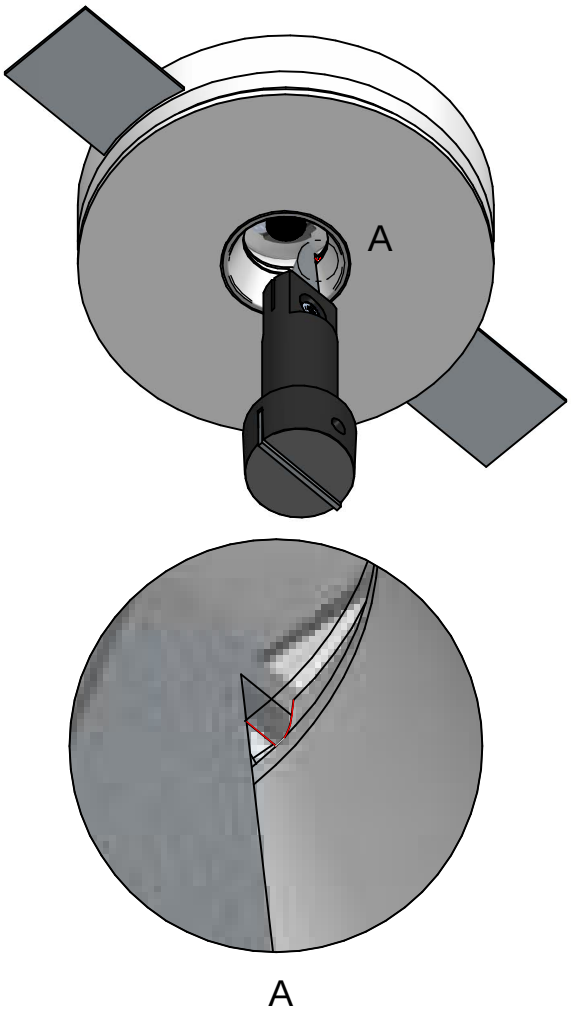

12A

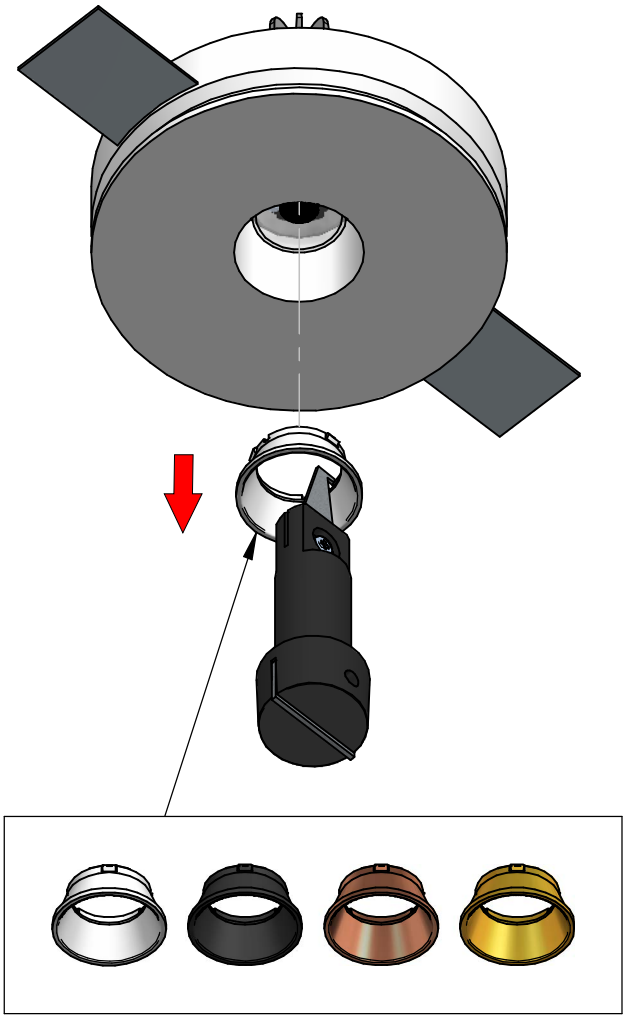

1B

Code	Driver type	Power
CA033AWHWFL	ON/OFF	8W x2
CA033AWHMFL	ON/OFF	8W x2
CA033AWHWMW	ON/OFF	8W x2
CA033AWHMMW	ON/OFF	8W x2
CA034AWHWFL	ON/OFF	8W x2
CA034AWHMFL	ON/OFF	8W x2
CA034AWHWMW	ON/OFF	8W x2
CA034AWHMMW	ON/OFF	8W x2

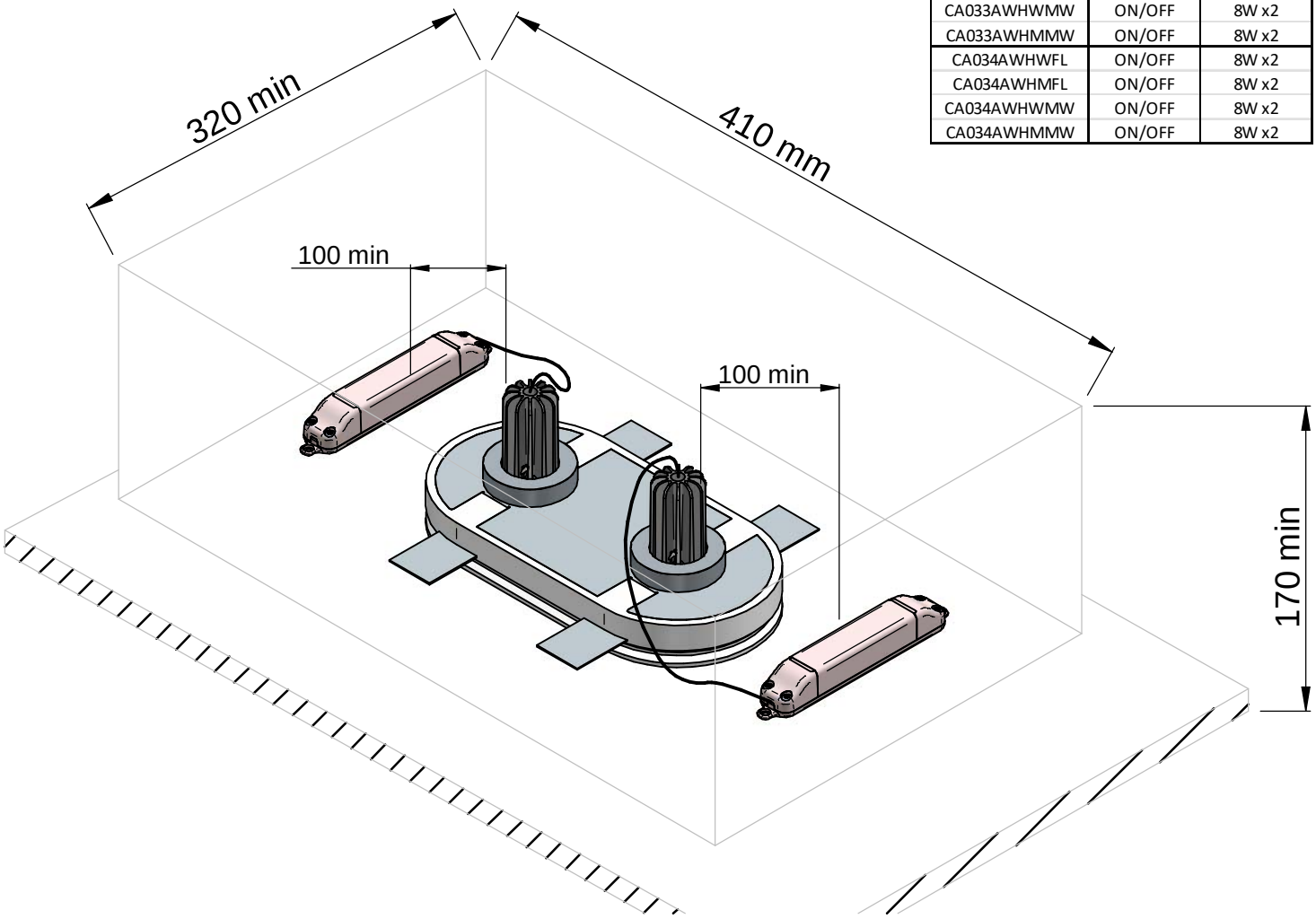

2B

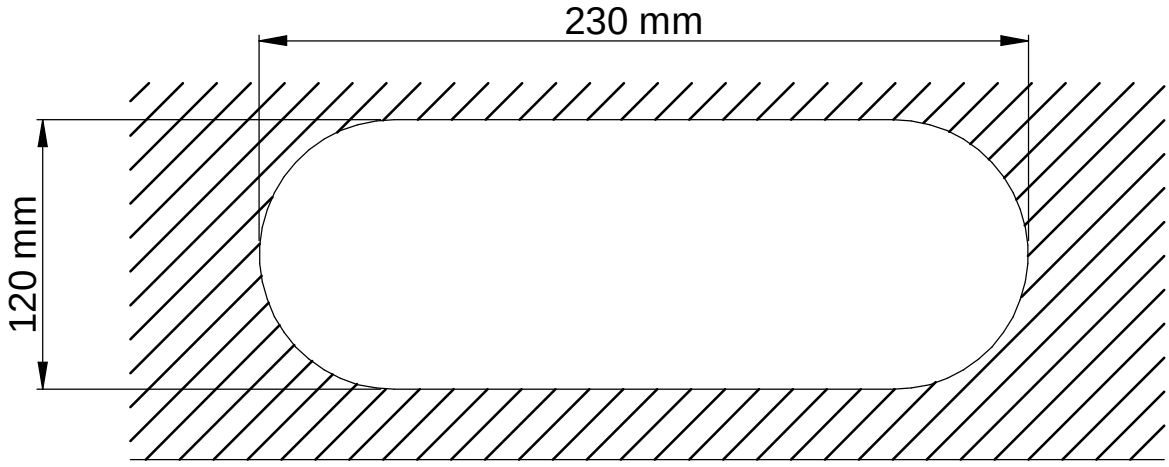

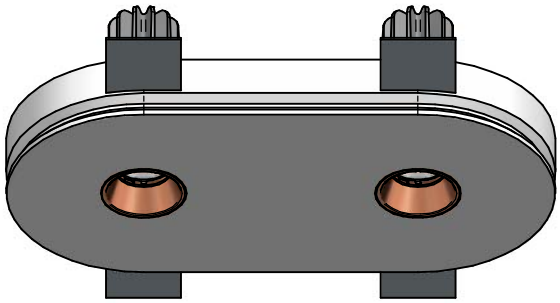

3B

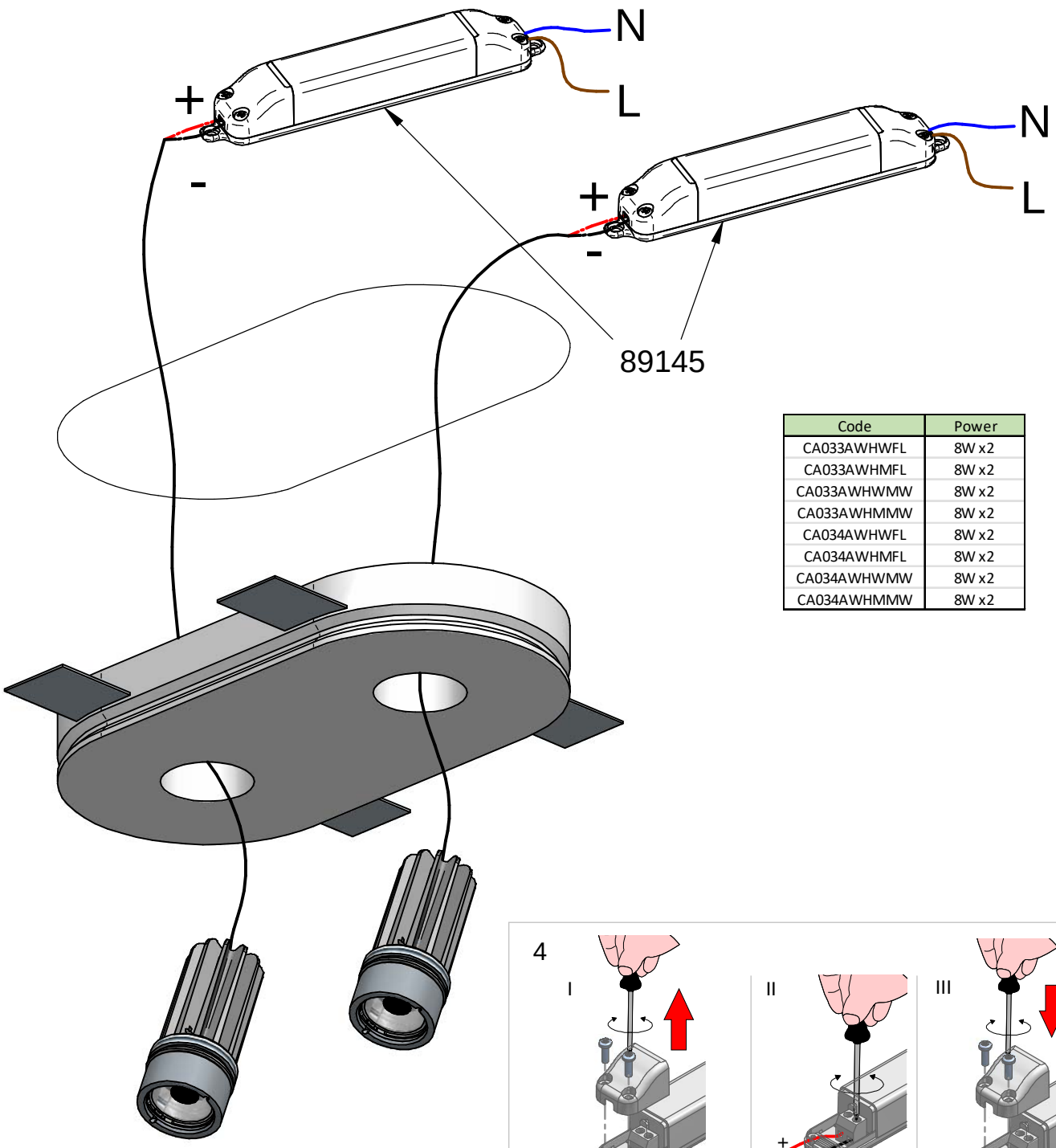

Code	Power
CA033AWHWFL	8W x2
CA033AWHMFL	8W x2
CA033AWHWMW	8W x2
CA033AWHMMW	8W x2
CA034AWHWFL	8W x2
CA034AWHMFL	8W x2
CA034AWHWMW	8W x2
CA034AWHMMW	8W x2

4

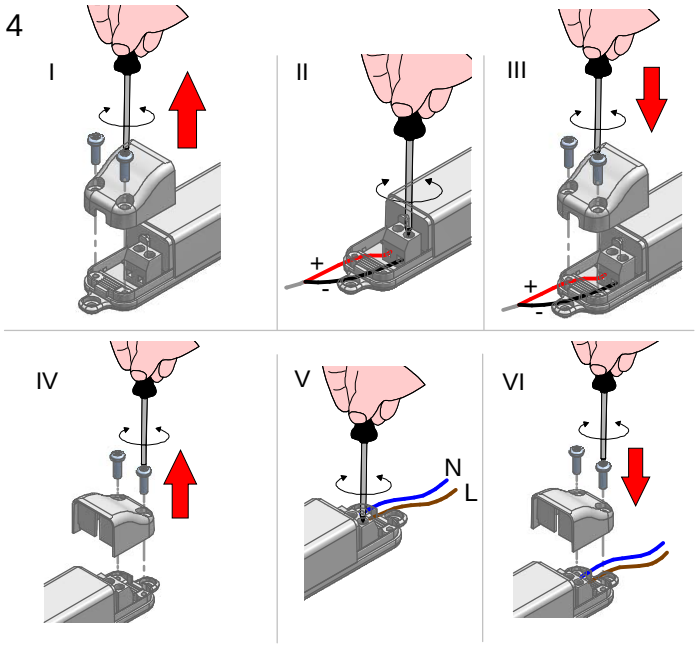

5B

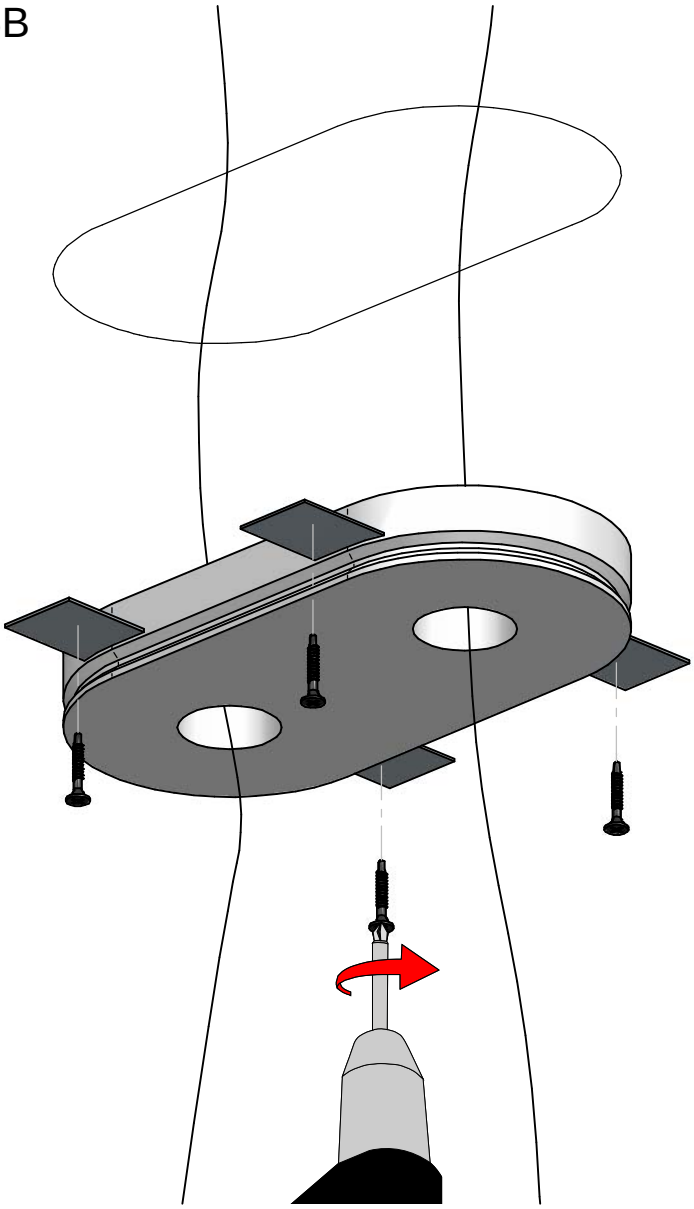

6B

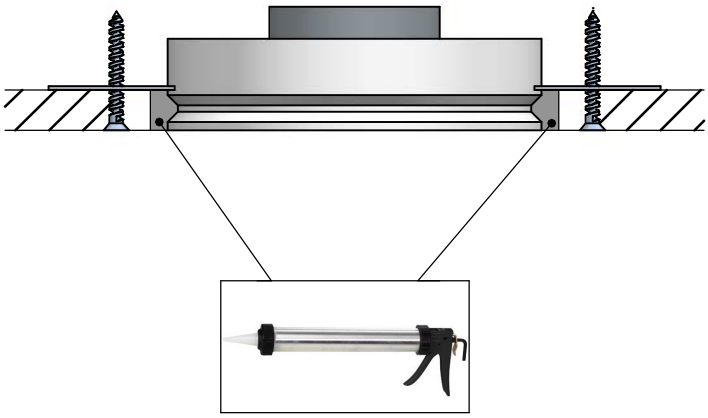

7B

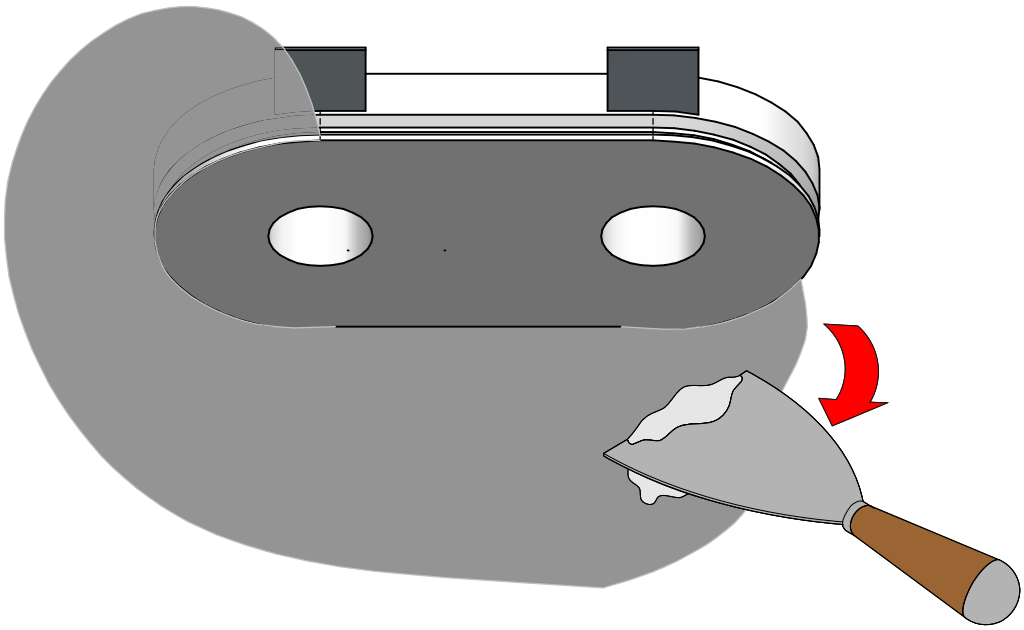

8B

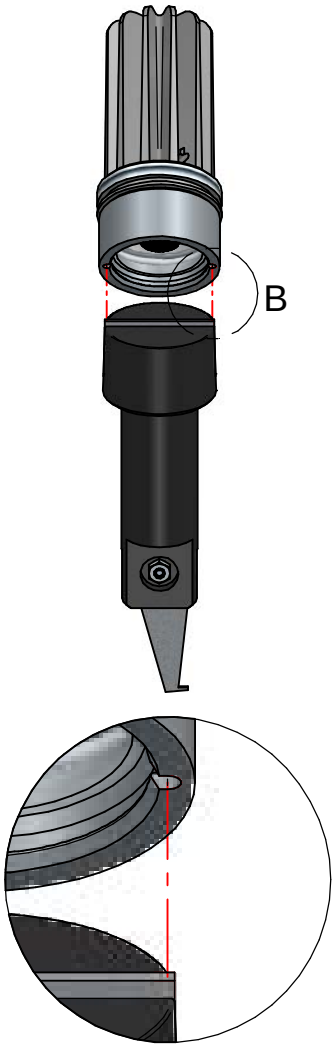

DETTAGLIO B

9B

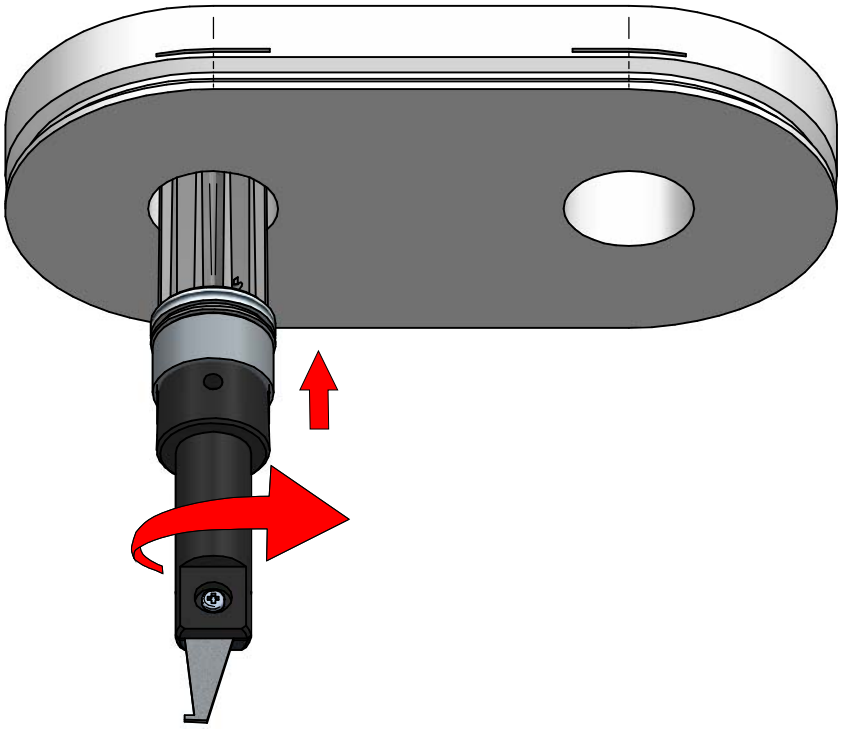

10B

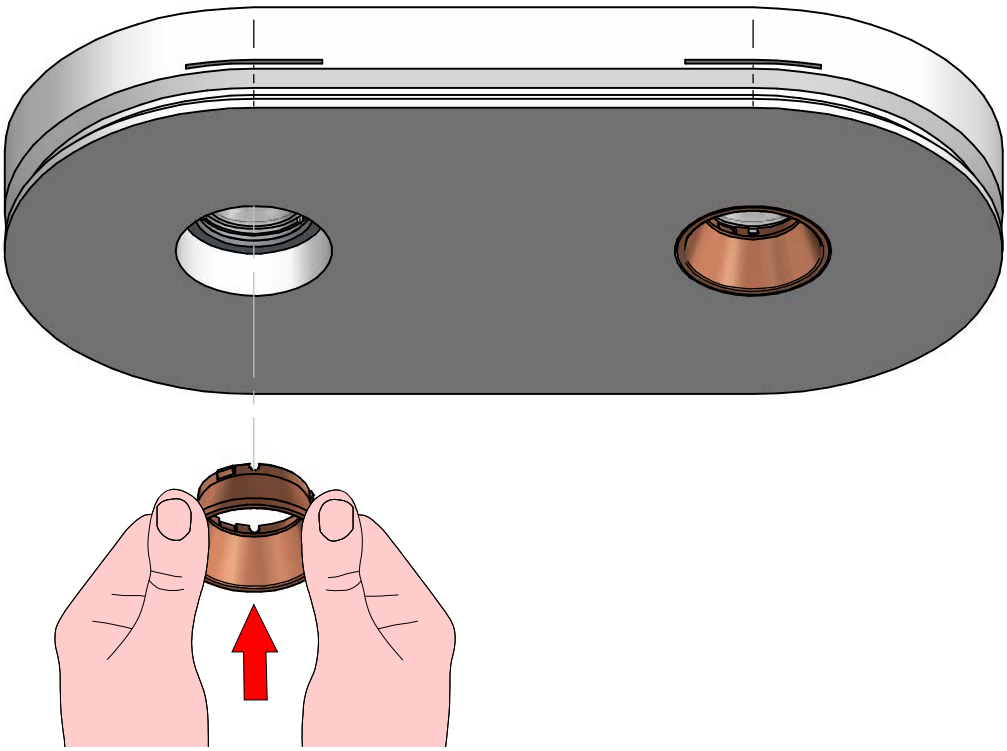

11B

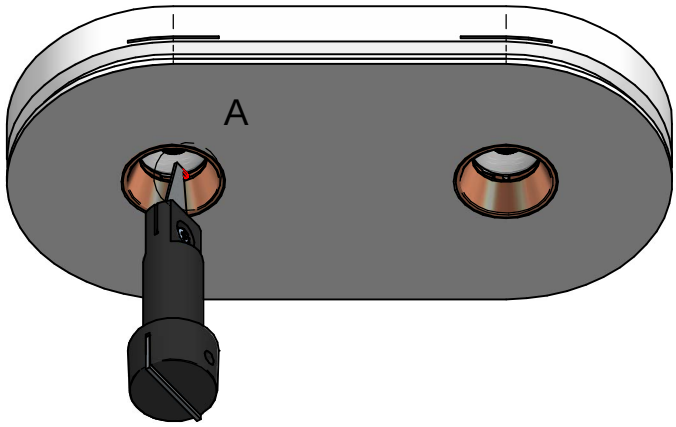

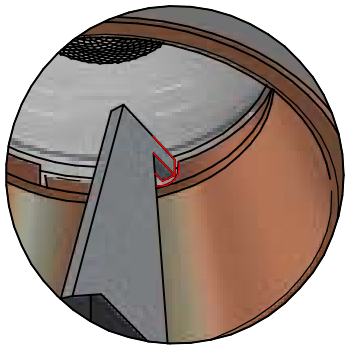

DETTAGLIO A

12B

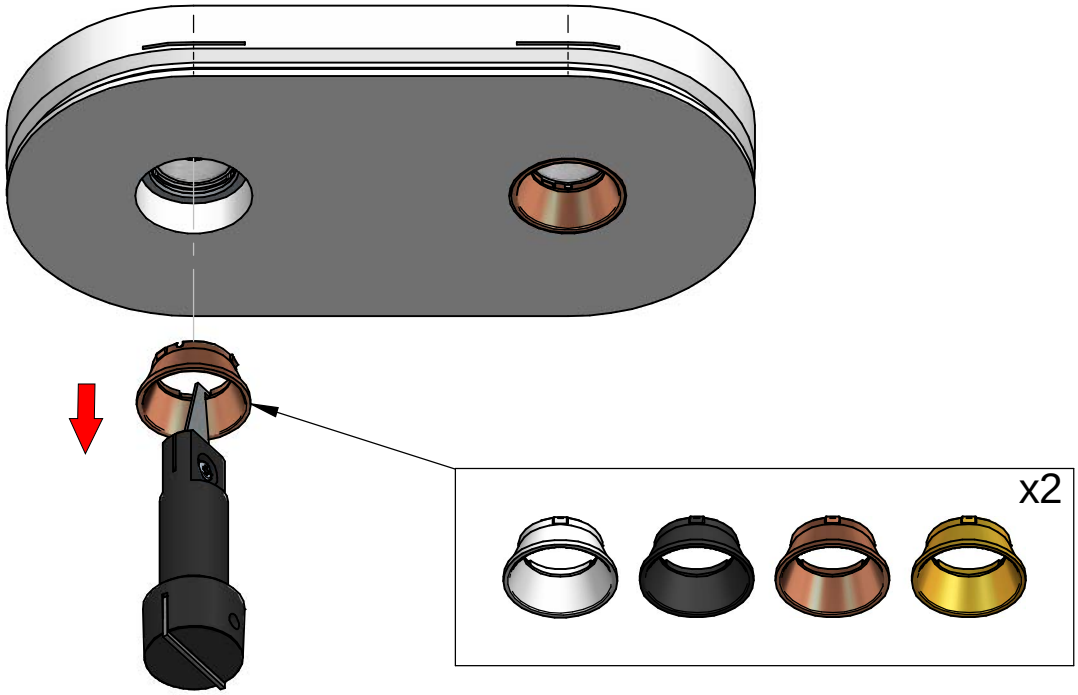

13B

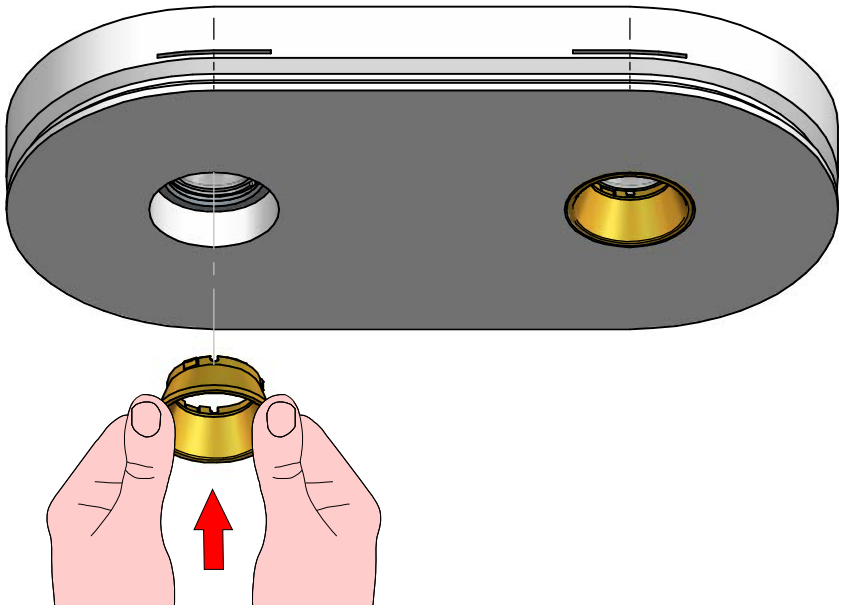

ISTRUZIONI PER IL LAVAGGIO DELL'APPARECCHIO D'ILLUMINAZIONE
LUMINAIRE CARE INSTRUCTIONS
ISTRUCCIONES PARA LIMPIAR LA LUMINARA
INSTRUCTIONS POUR LE LAVAGE DE L'APPAREIL D'ECLAIRAGE
ANLEITUNG ZUR REINIGUNG DES BELEUCHTUNGSGERATS

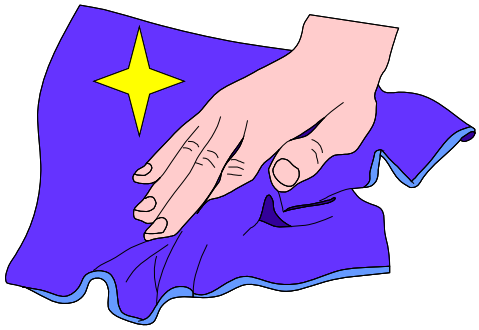



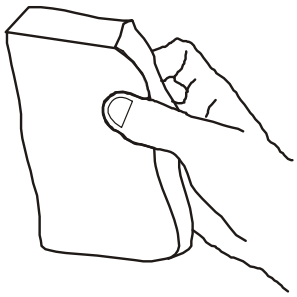

IT - ATTENZIONE!!!

Lavare la superficie del diffusore luce con panno umido, utilizzando solo acqua e sapone neutro.

EN - WARNING!!!

Wipe clean with a cloth damped in water with neutral detergent.

ES - ATENCION!!!

Limpie la superficie del difusor con un pano humedecido con agua y jabon neutro.

FR - ATTENTION!!!

Laver la surface du diffuseur de lumiere a l'aide d'un chiffon humide et en utlisant seulement de l'eau et du savon neutre.

DE - ACHTUNG!!!

Die oberflache vom lampenschirm mit einem feuchten lappen reinigen. De lappen mit wasser und neutralseife befeuchten.

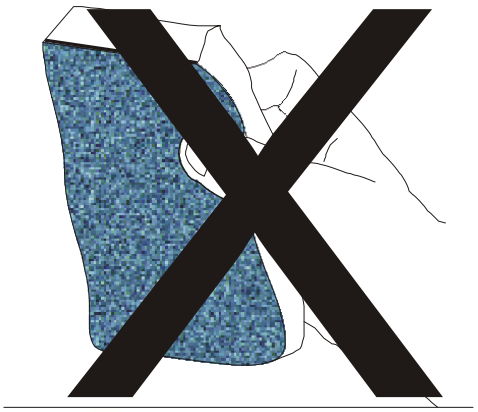



IT - ATTENZIONE!!!

Non utilizzare panni abrasivi e/o solventi.

EN - WARNING!!!

Avoiding the use of chemical solvents and/or abrasive cloths.

ES - ATENCION!!!

No utilizar panos abrasivos y solventes.

FR - ATTENTION!!!

Ne pas utiliser de chiffons abrasifs ou de dissolvants.

DE - ACHTUNG!!!

Abschleifende tuche und/oder losungmittel nicht benutzen.