8931
ARUBA
rev:00

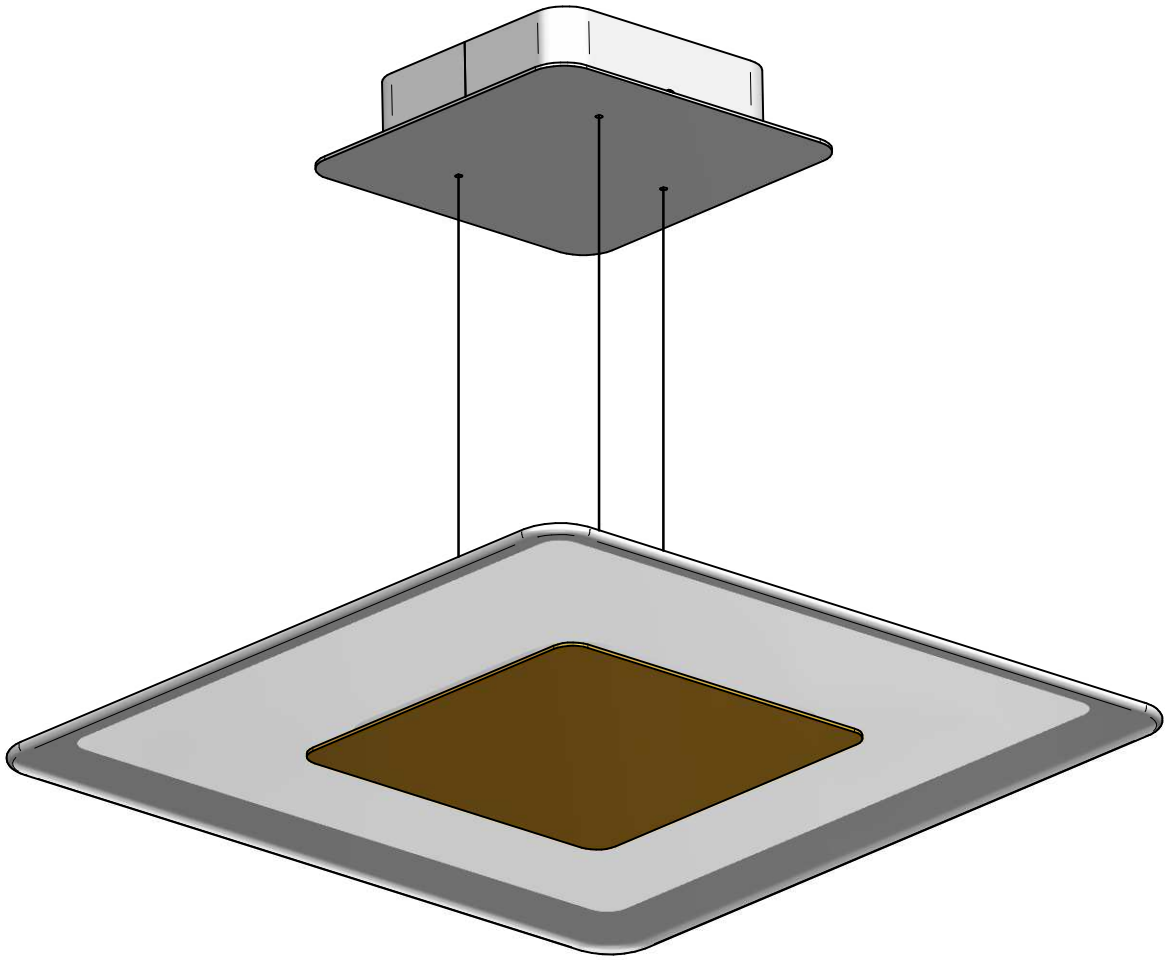

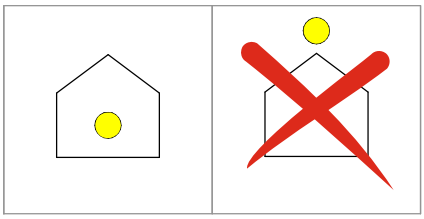

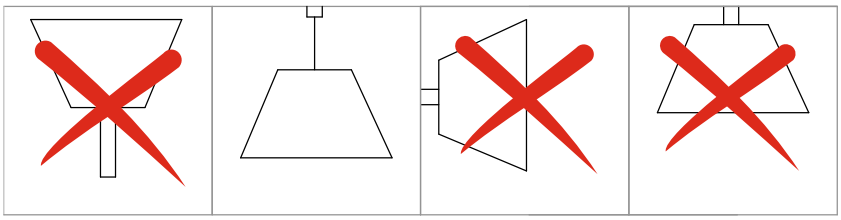

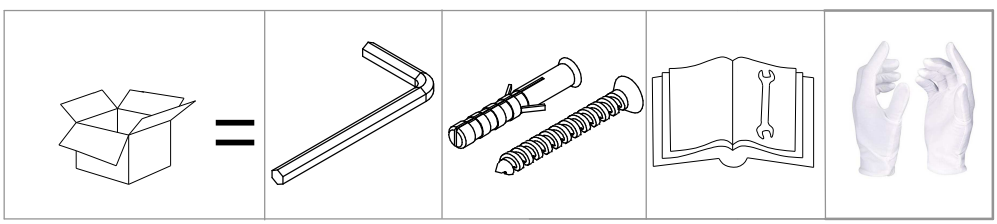

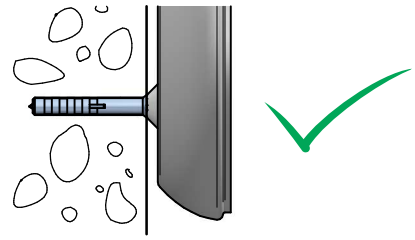

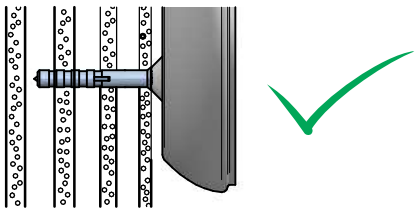

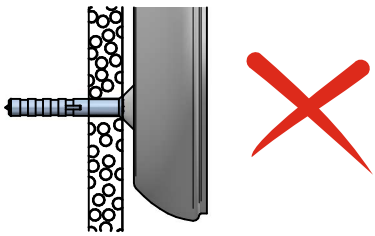

1

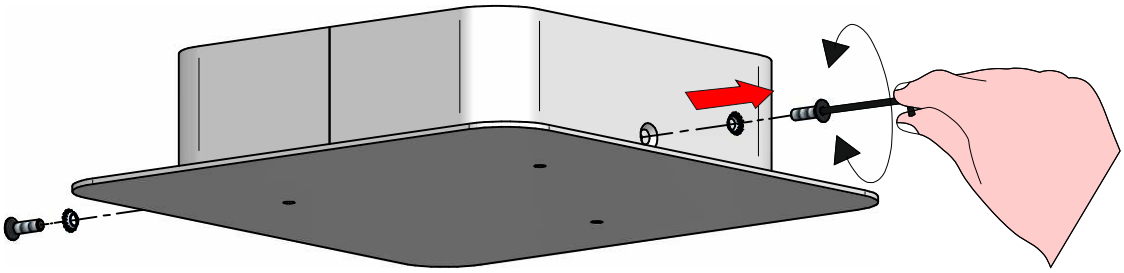

2

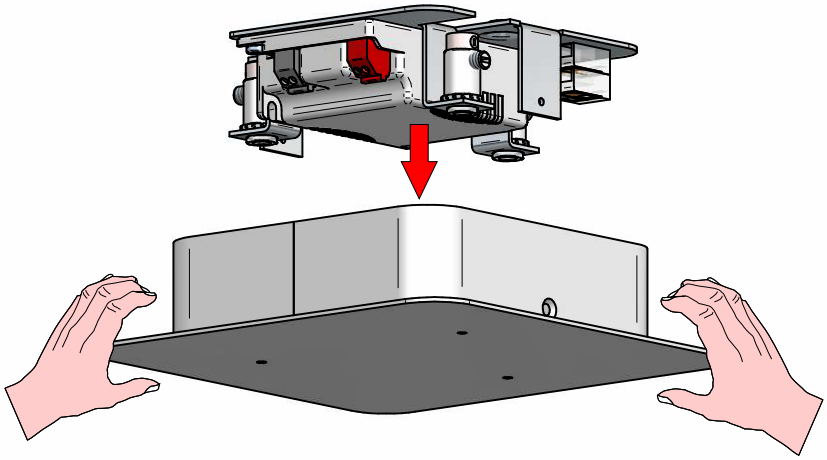

3

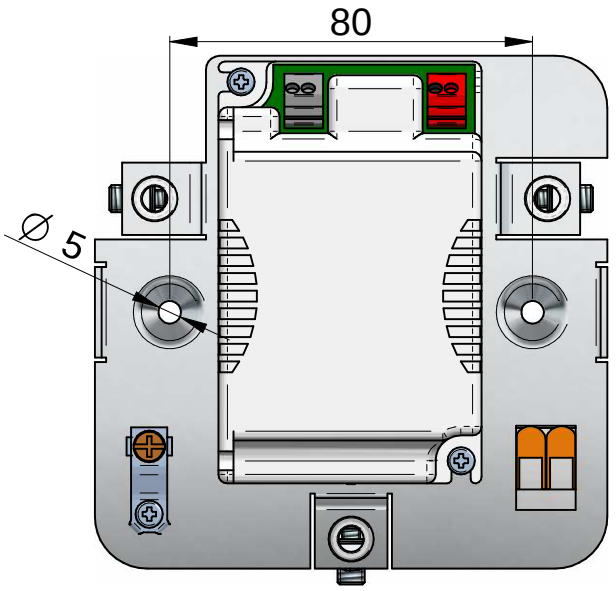

4

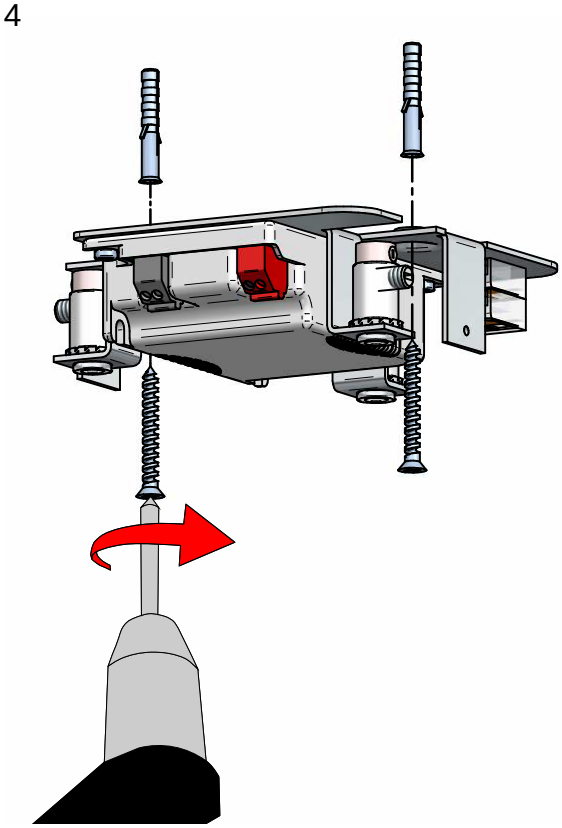

5

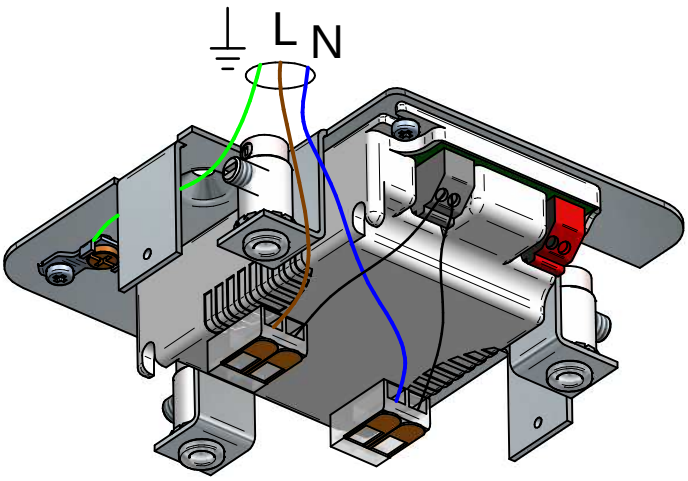

6

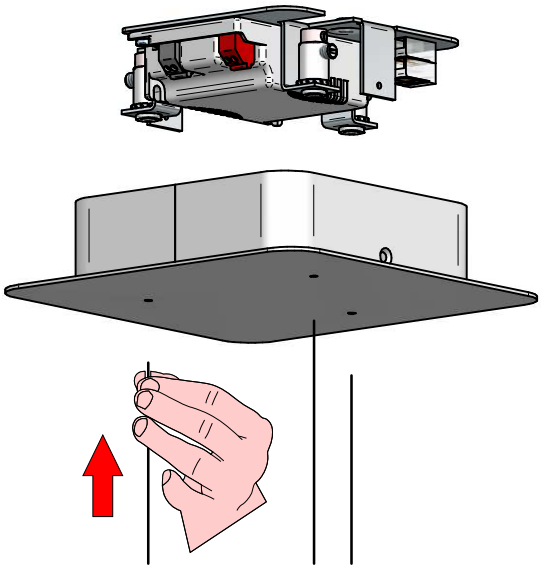

7

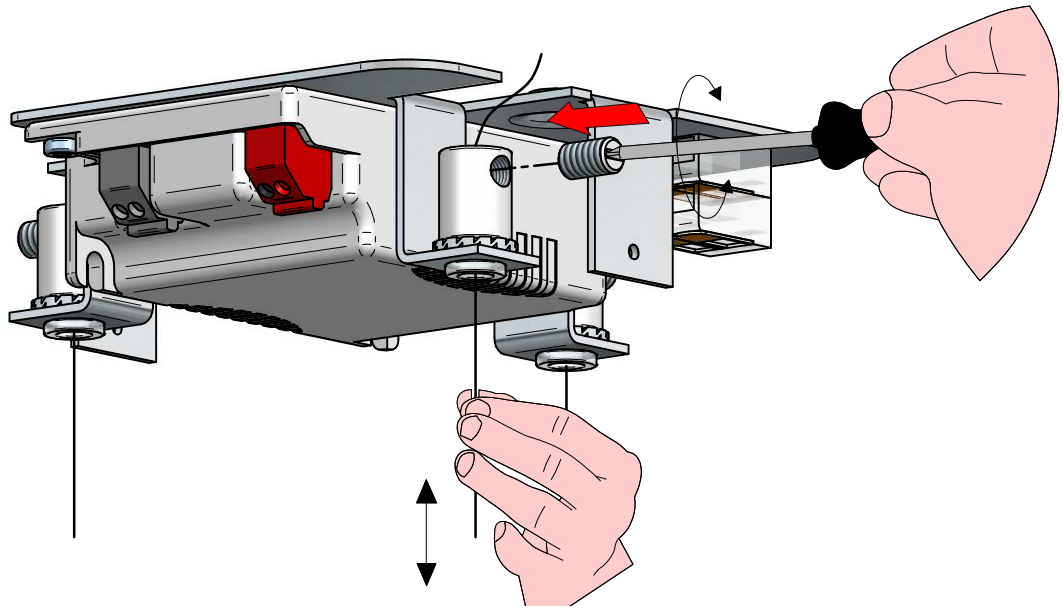

8

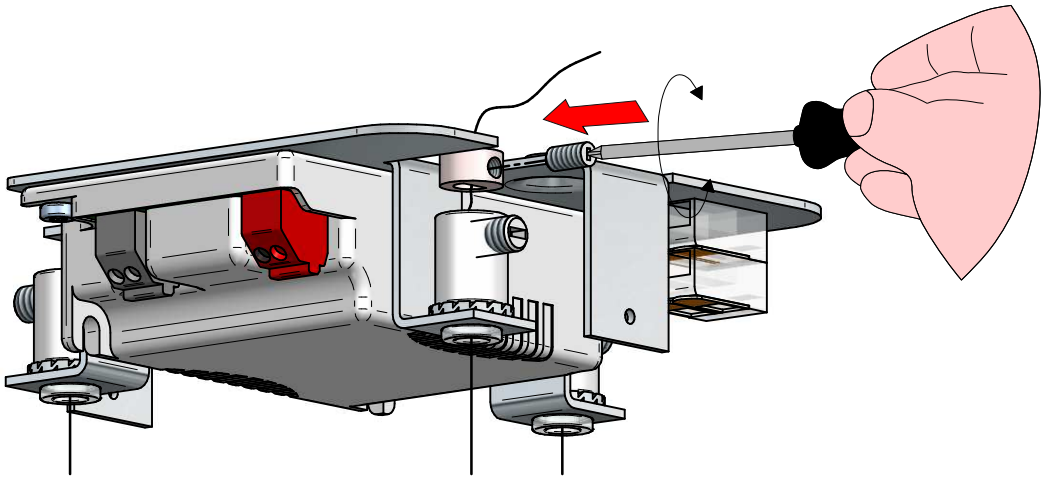

9

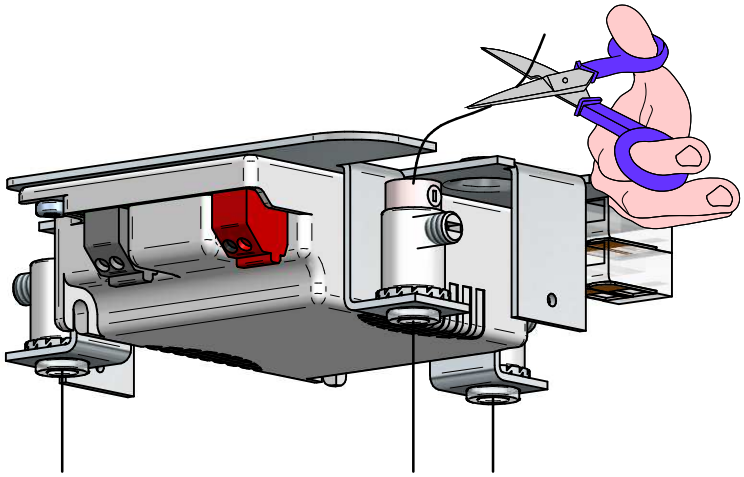

10

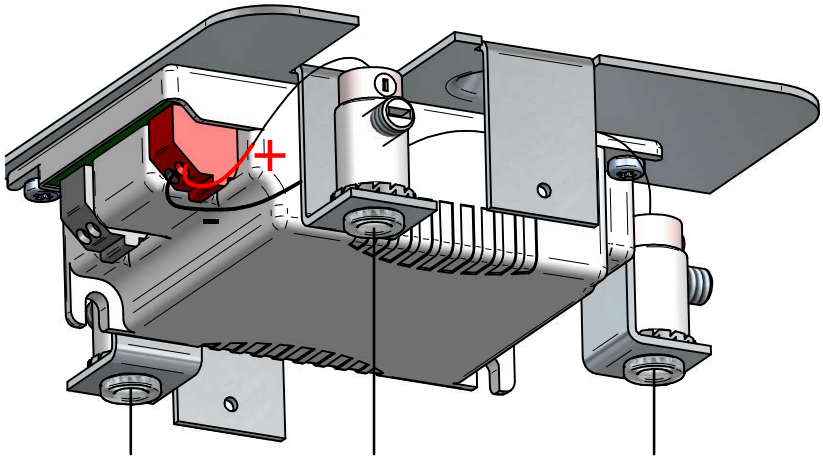

11

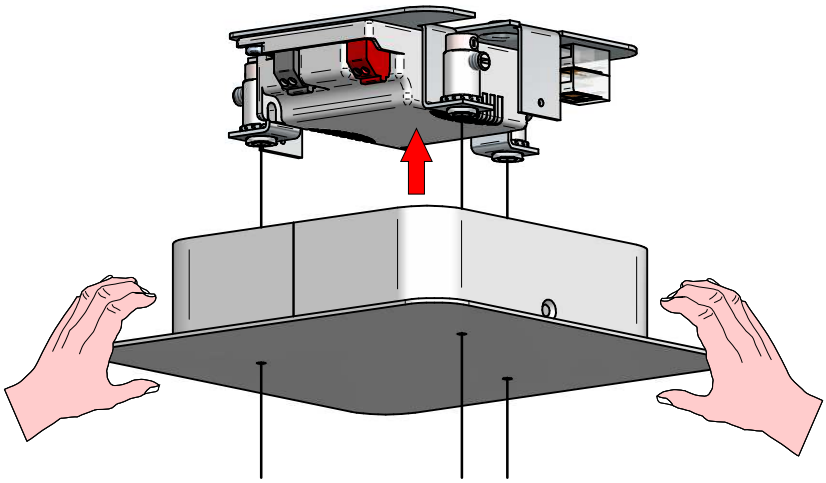

12

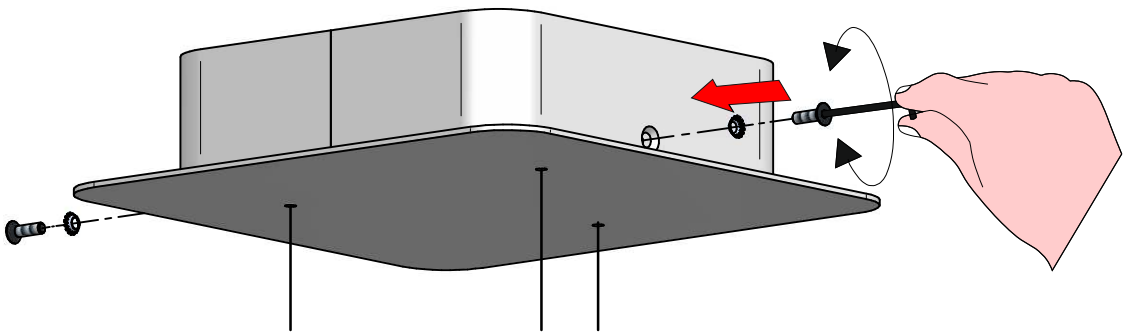

8931
ARUBA
rev:00

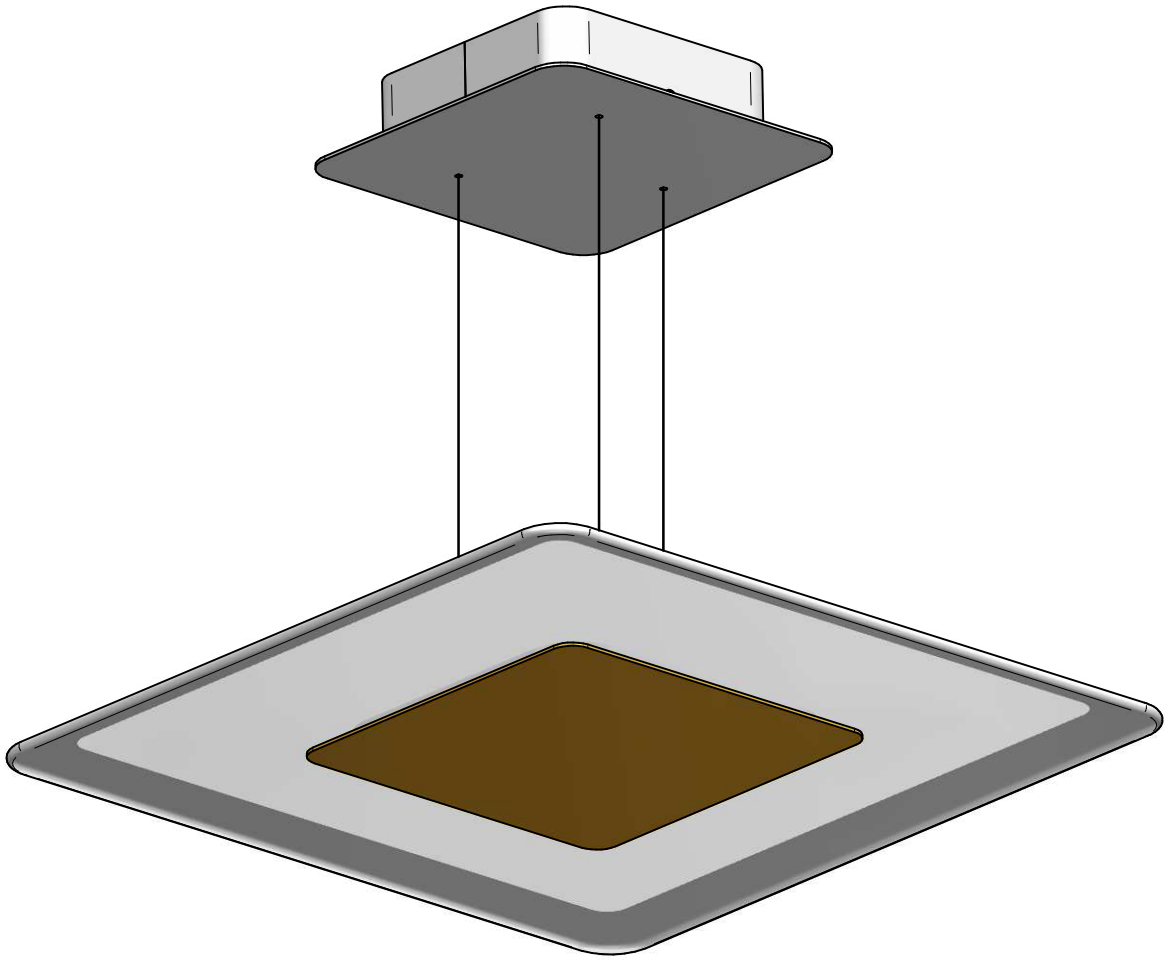

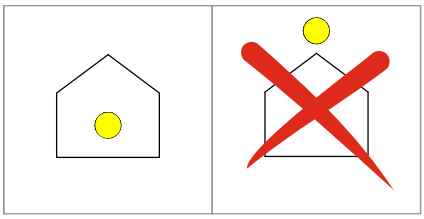

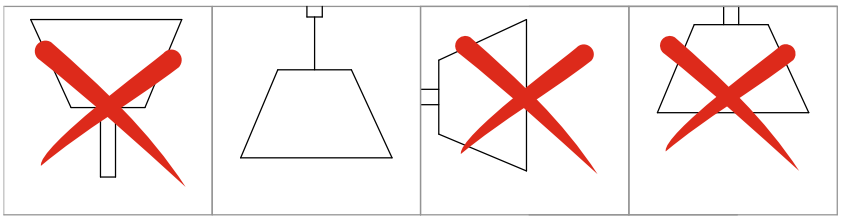

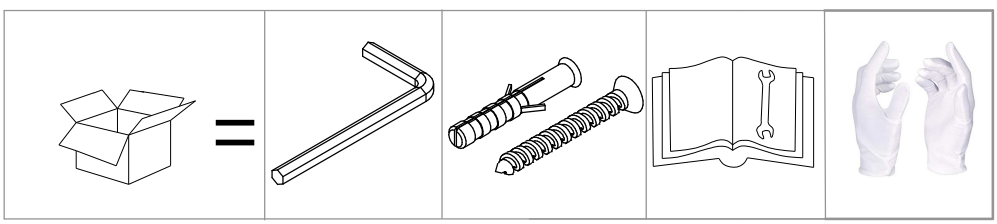

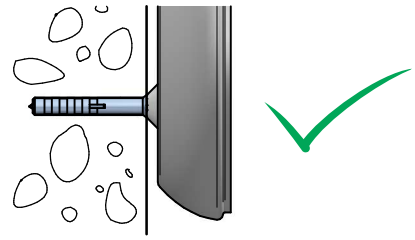

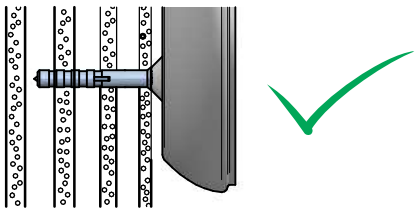

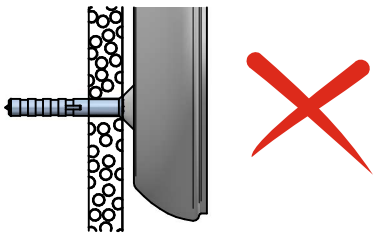

1

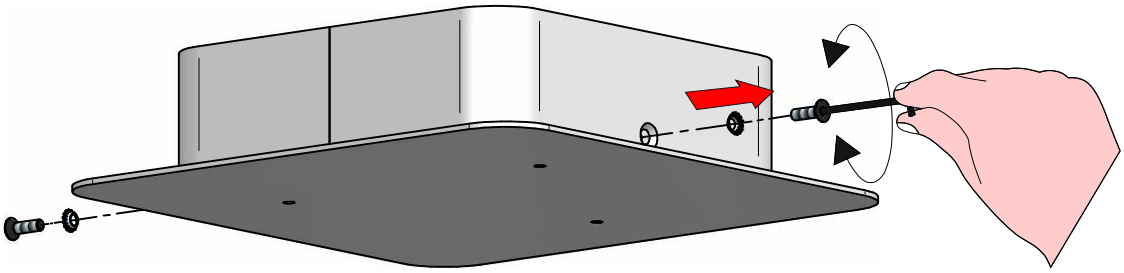

2

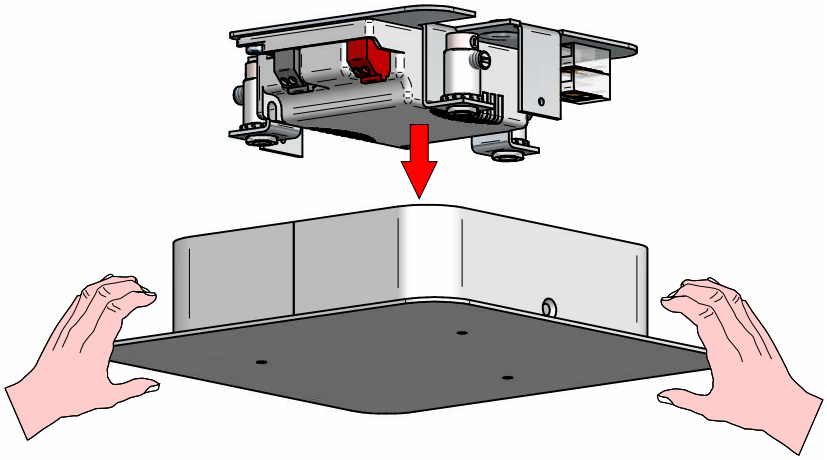

3

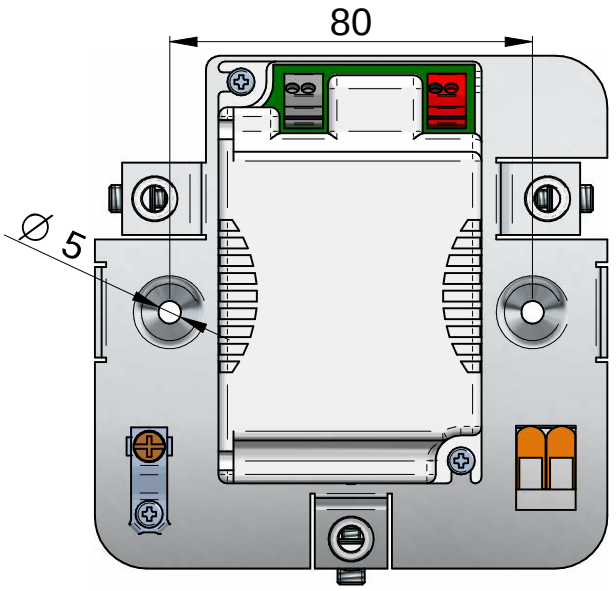

4

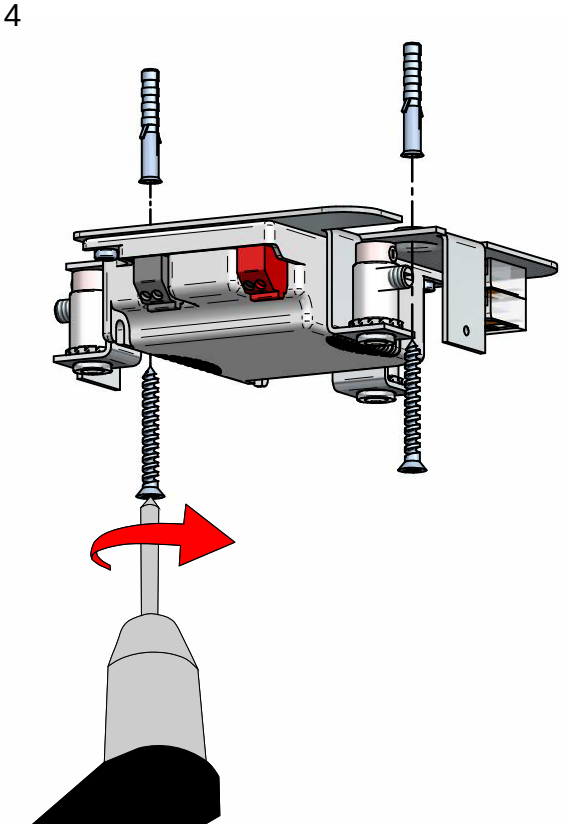

5

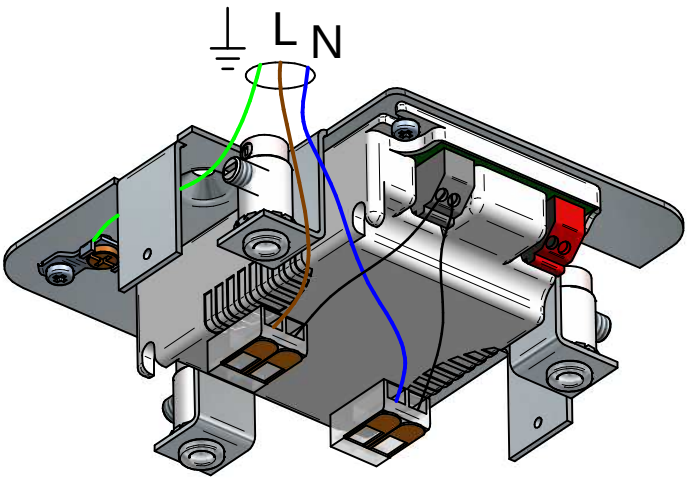

6

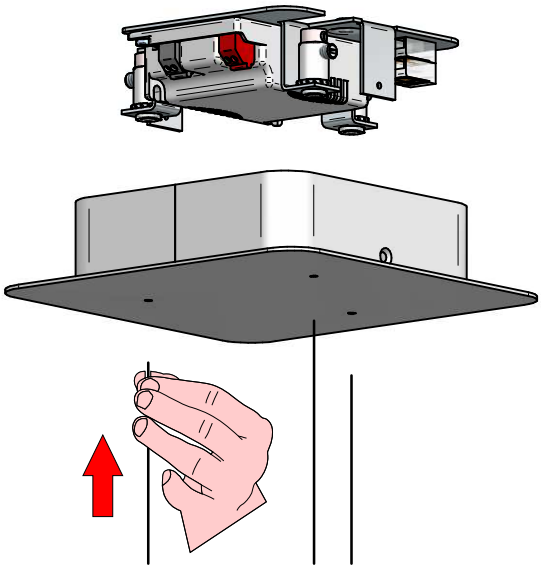

7

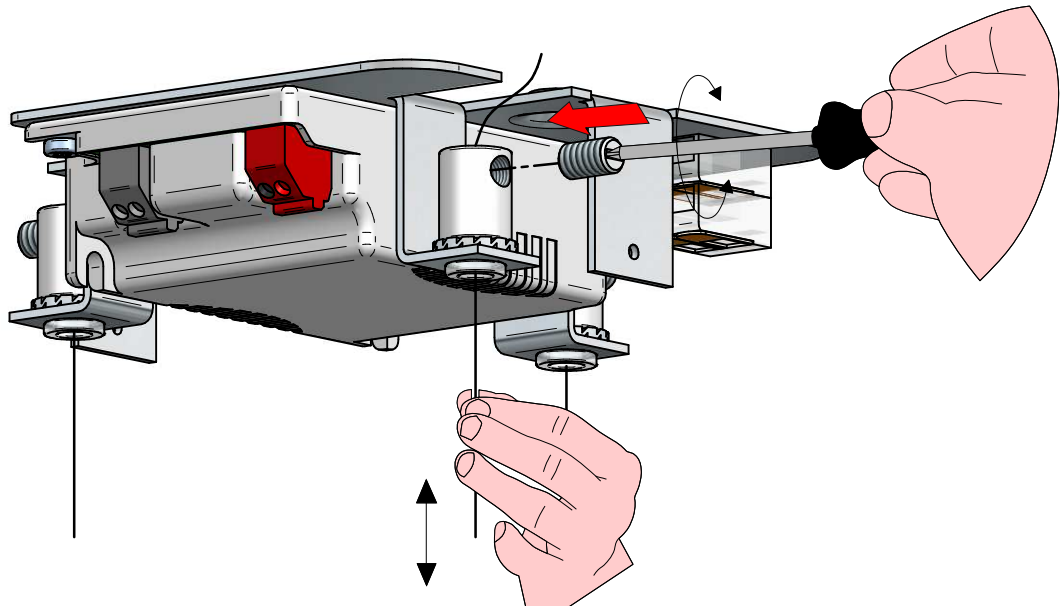

8

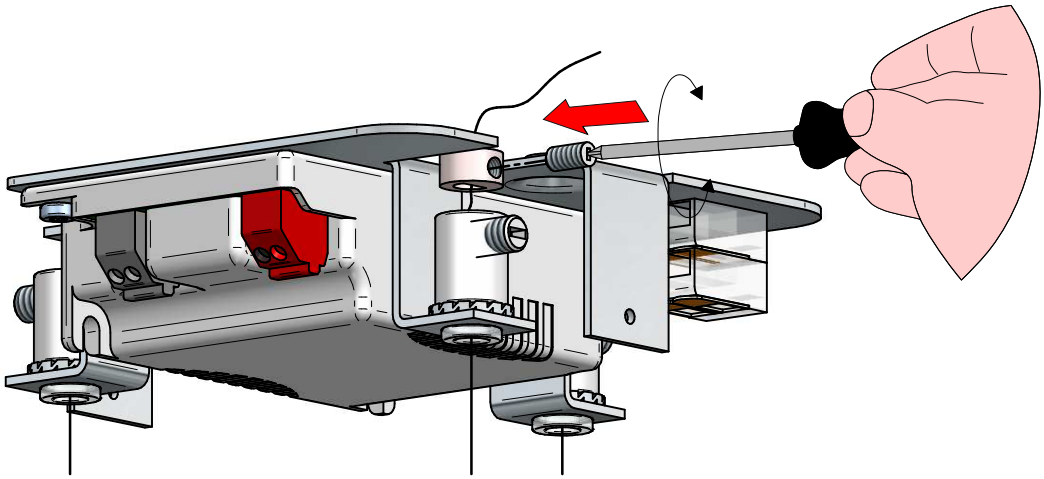

9

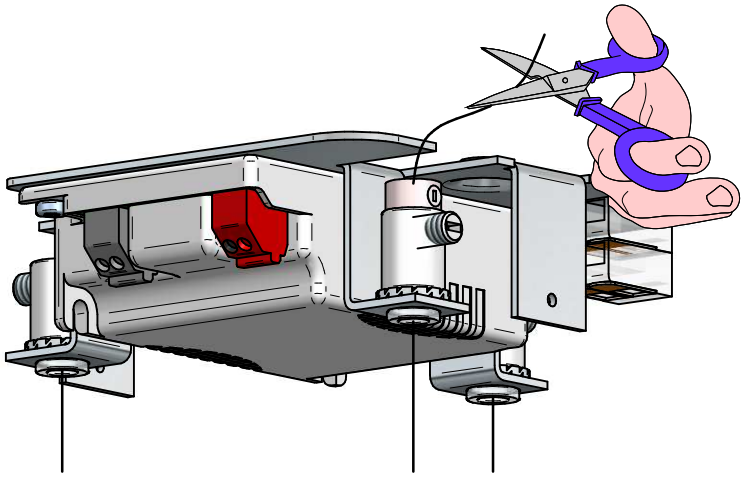

10

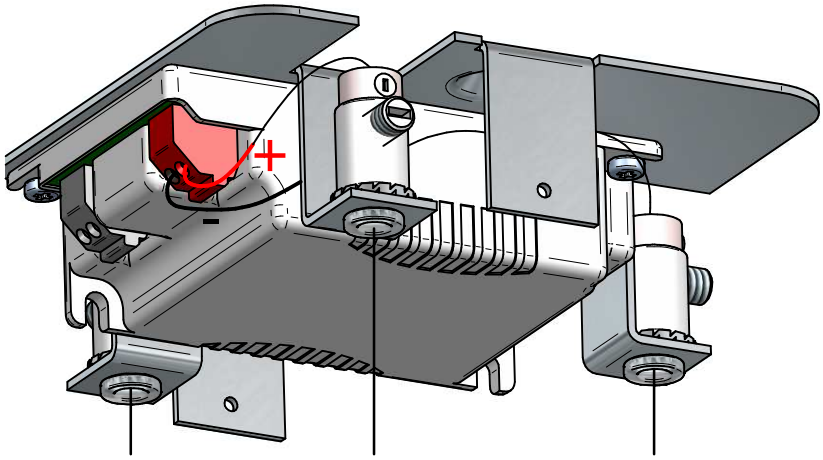

11

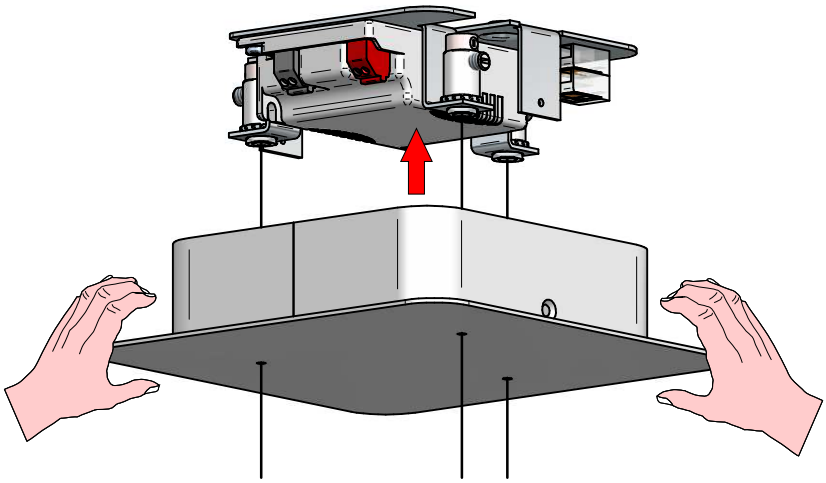

12

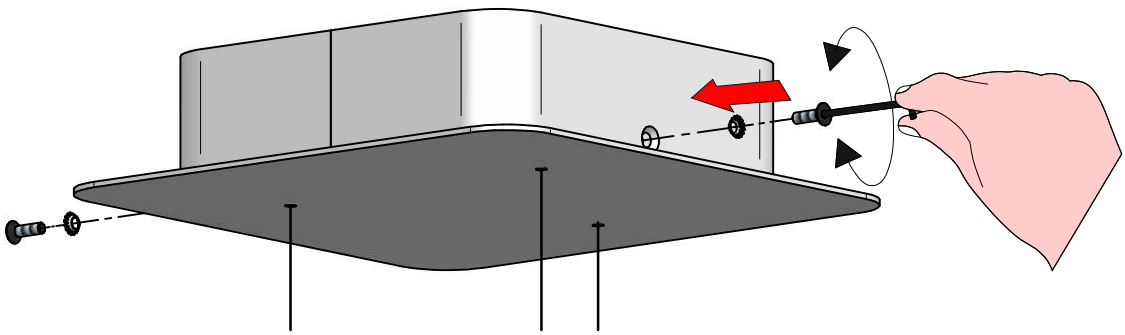

8928
ARUBA
rev:00

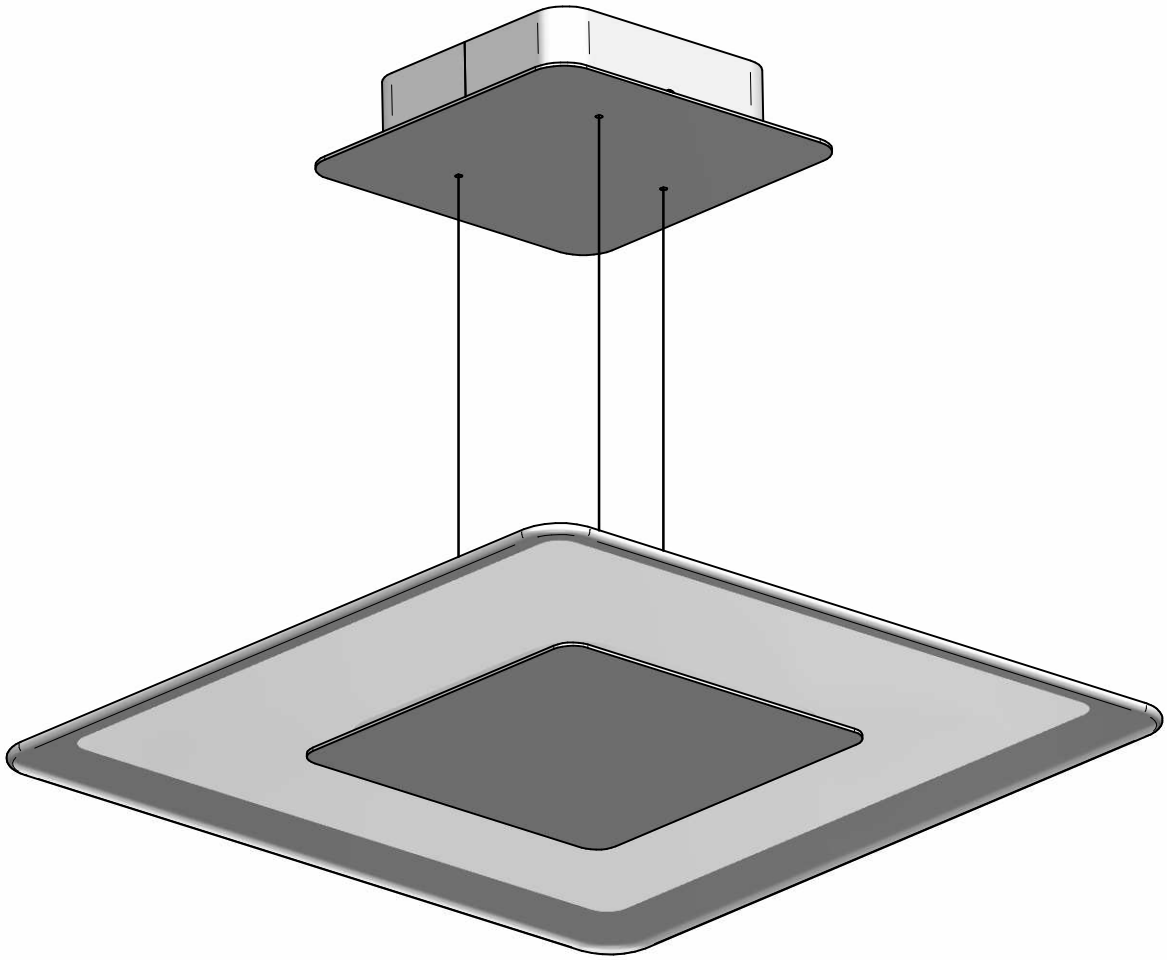

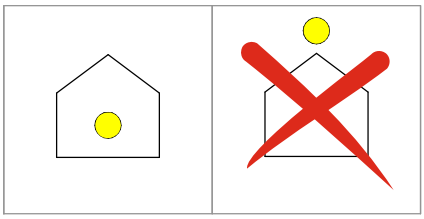

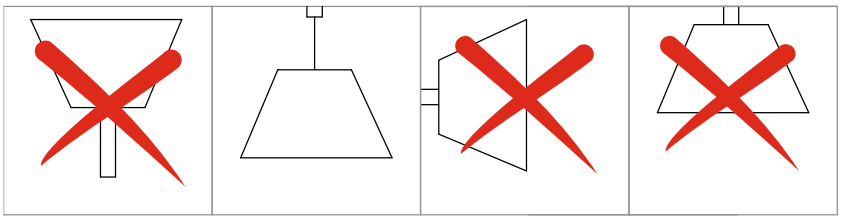

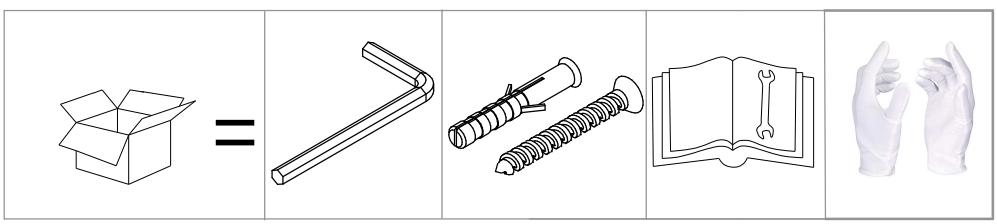

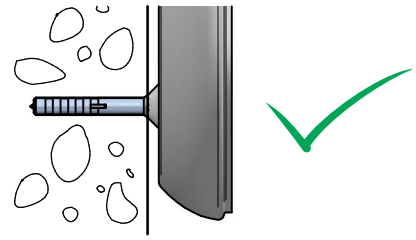

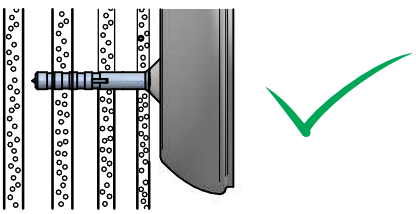

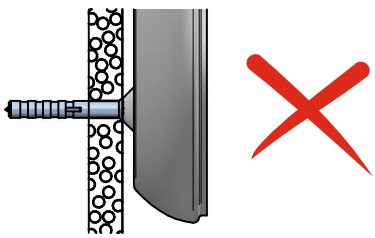

1

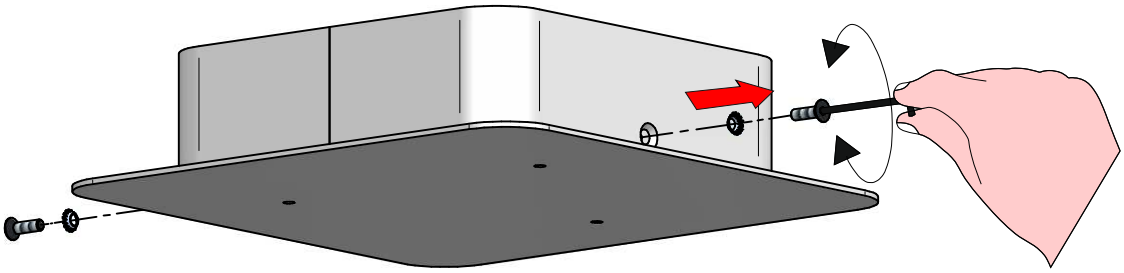

2

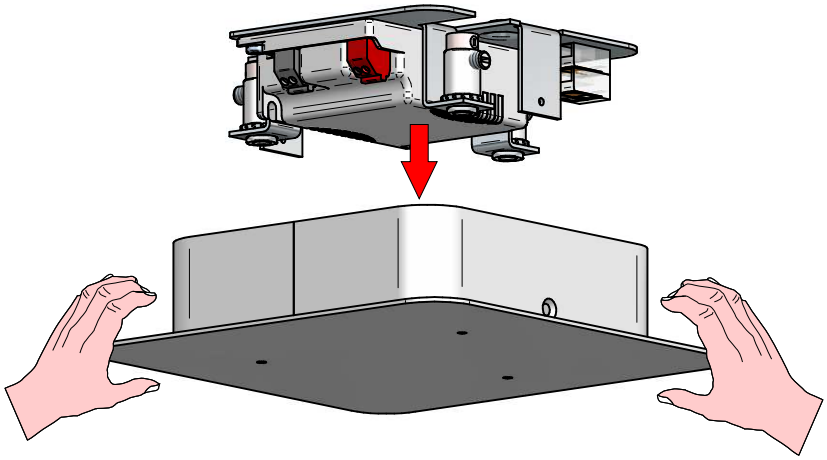

3

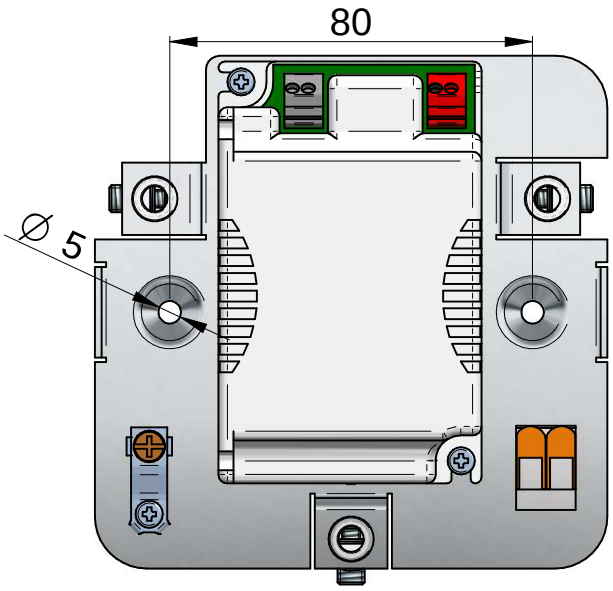

4

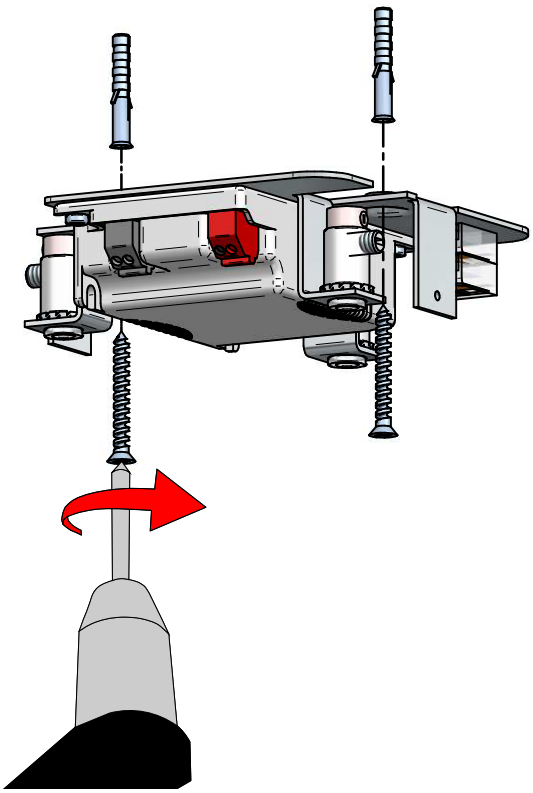

5

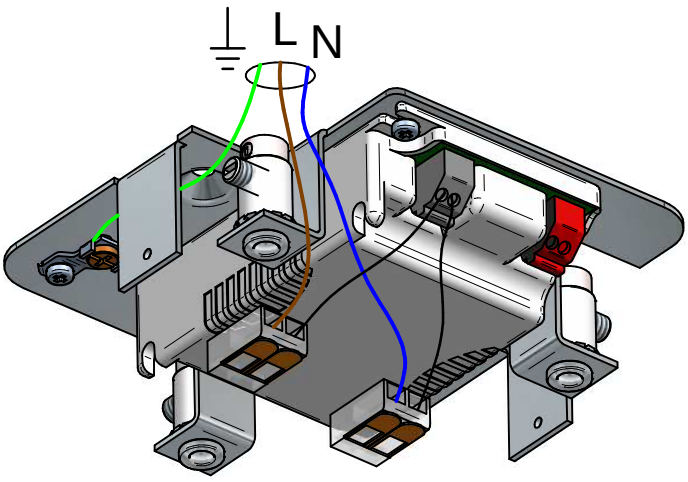

6

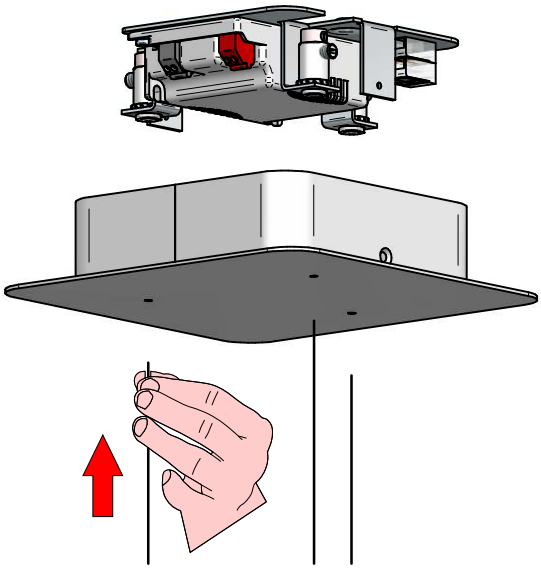

7

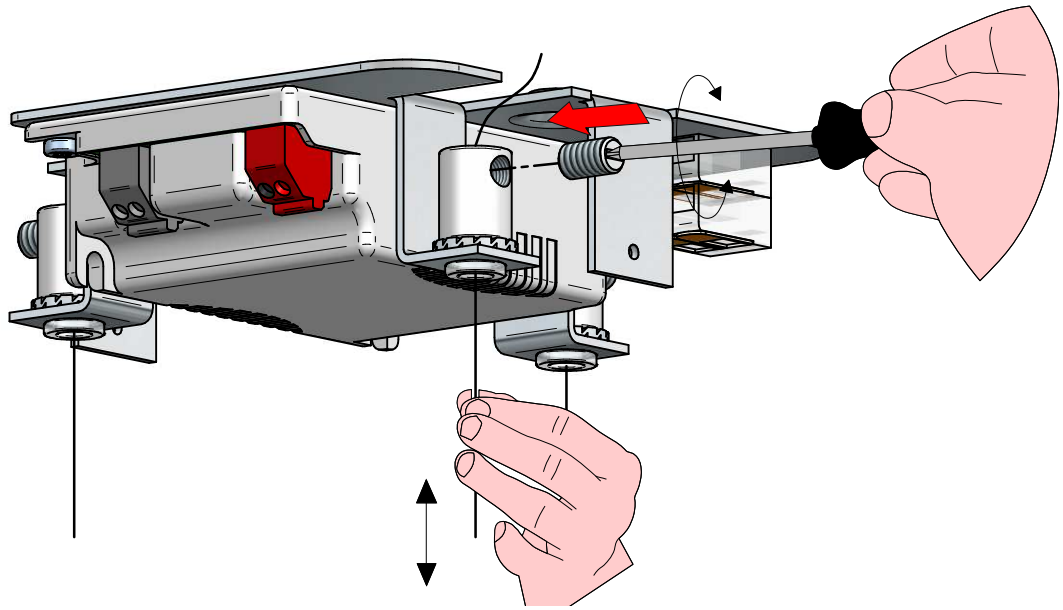

8

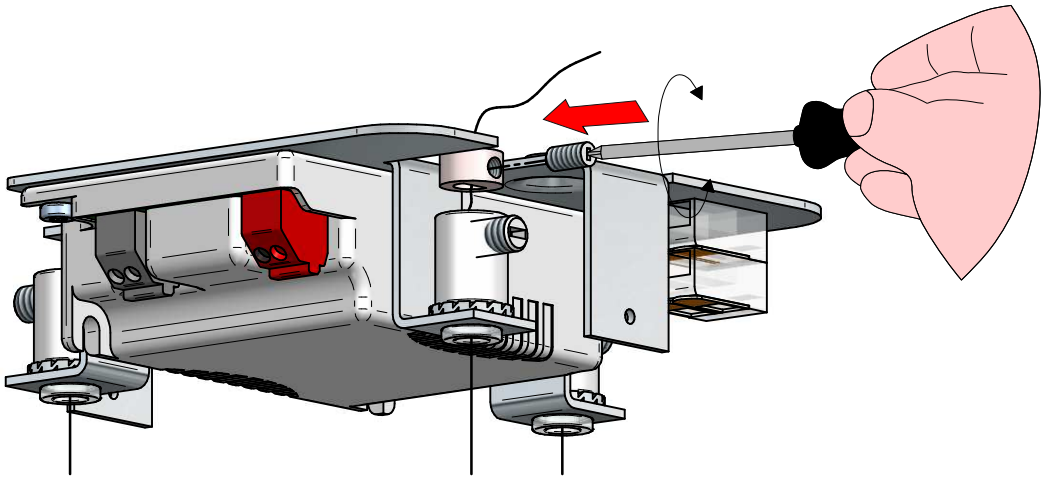

9

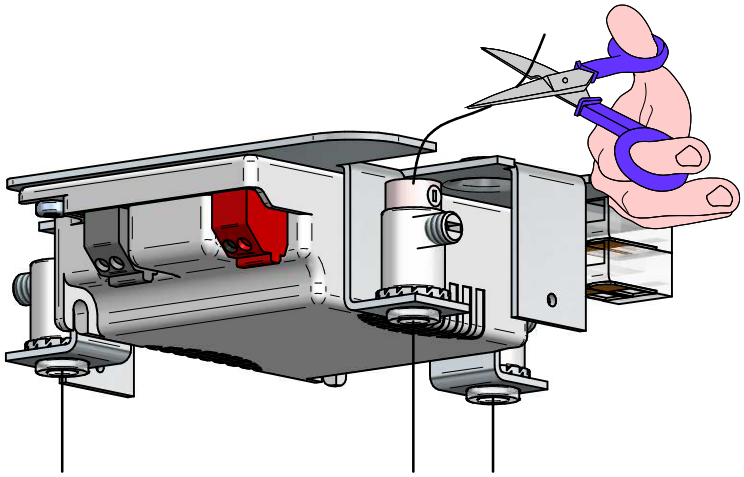

10

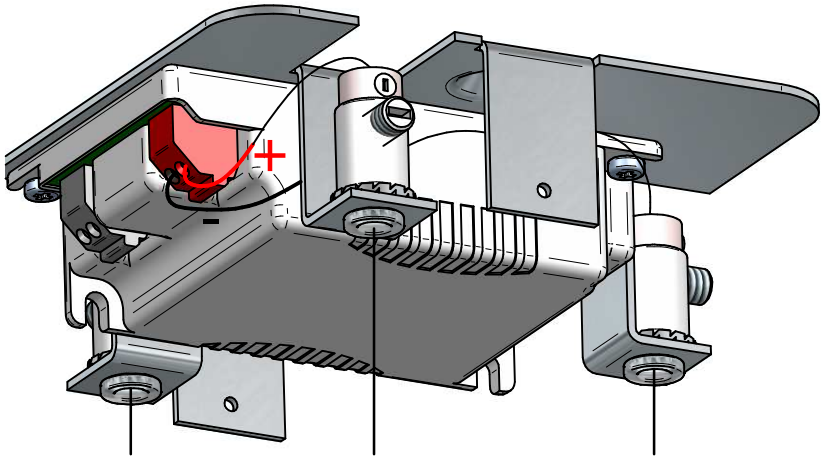

11

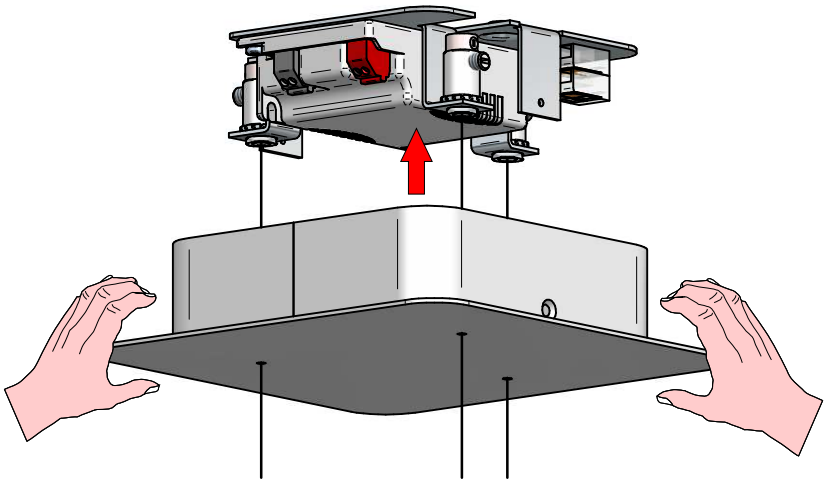

12

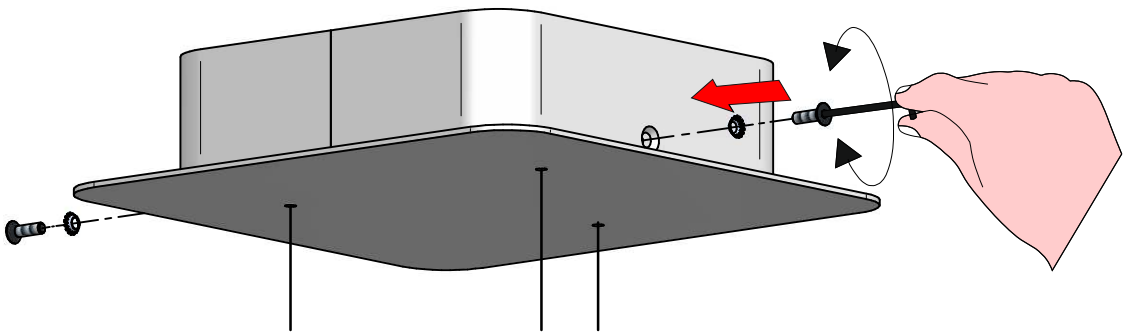

8929
ARUBA
rev:00

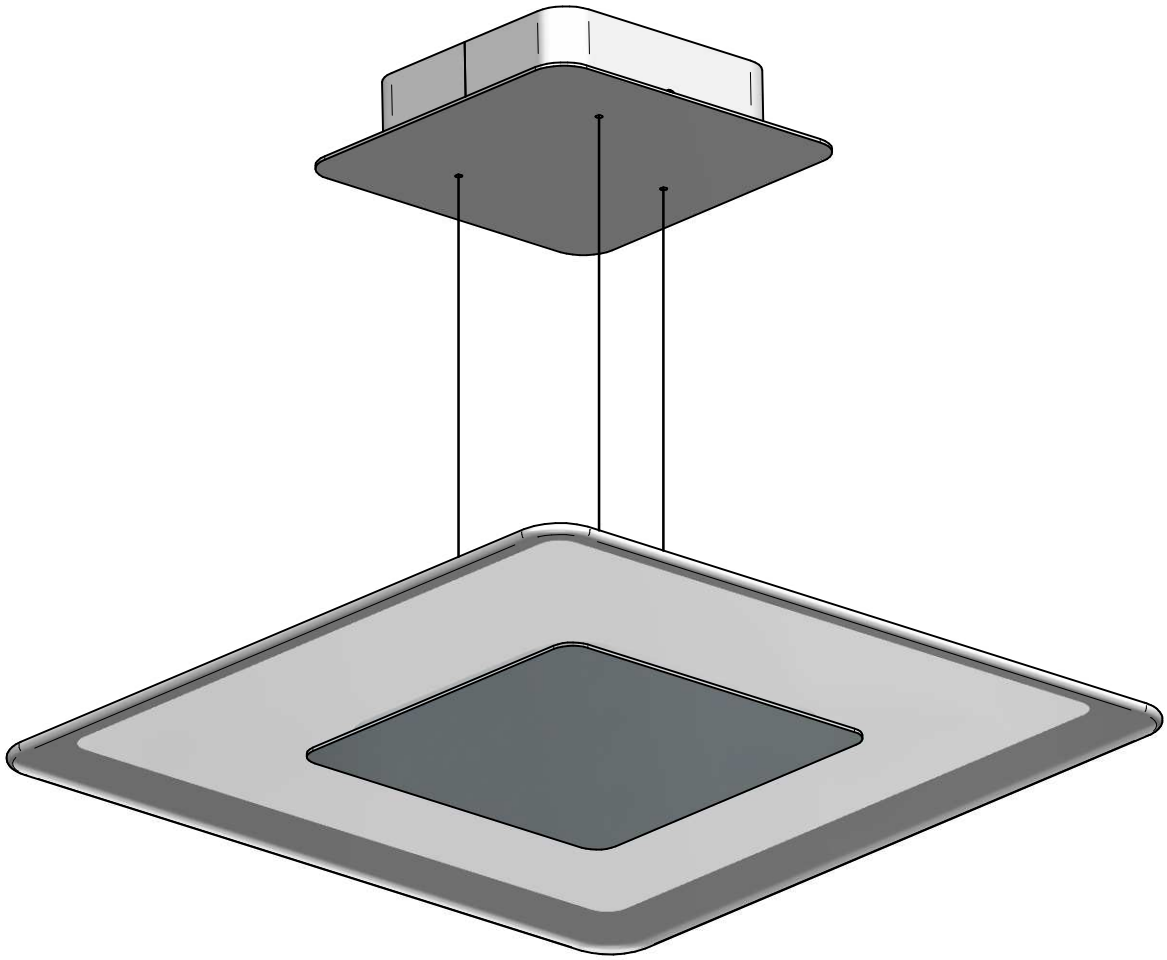

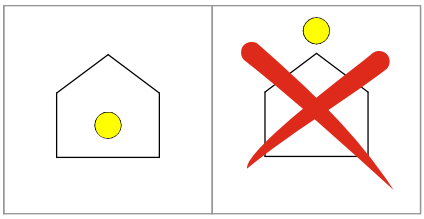

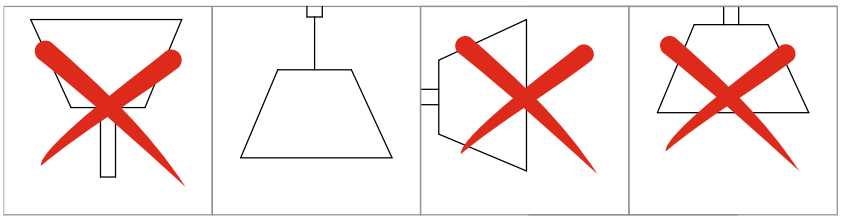

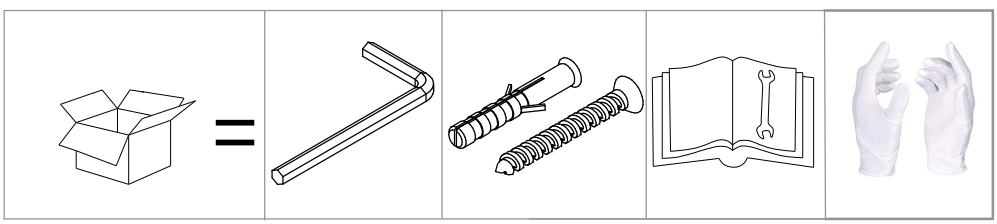

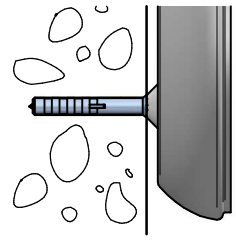

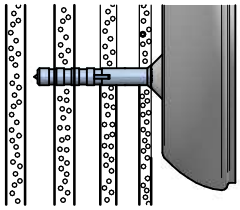

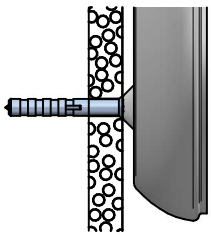

1

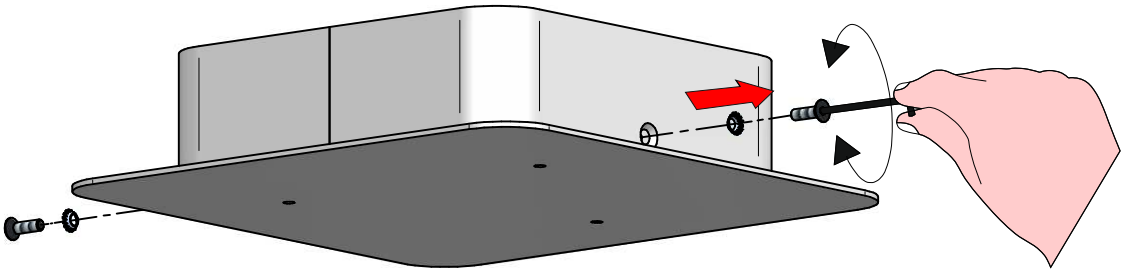

2

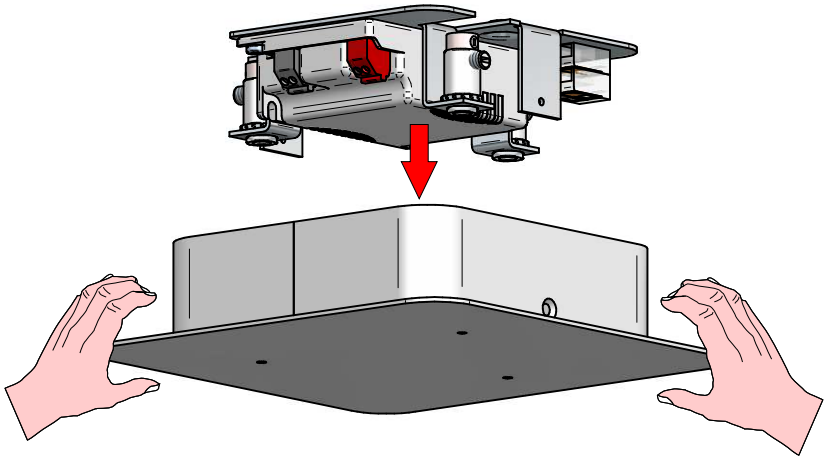

3

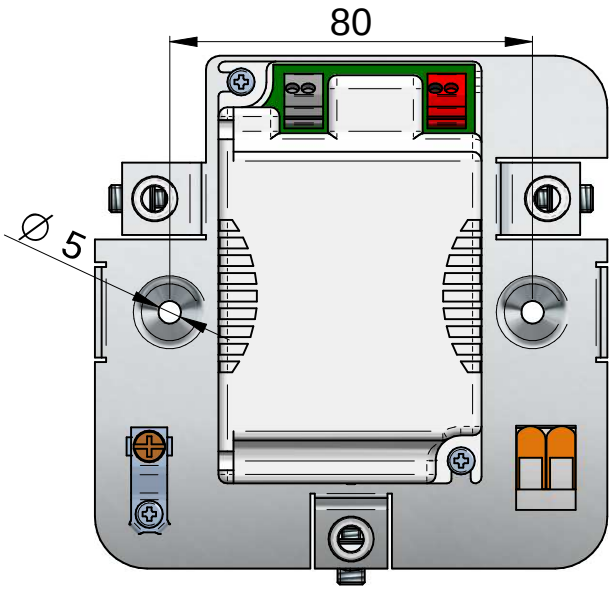

4

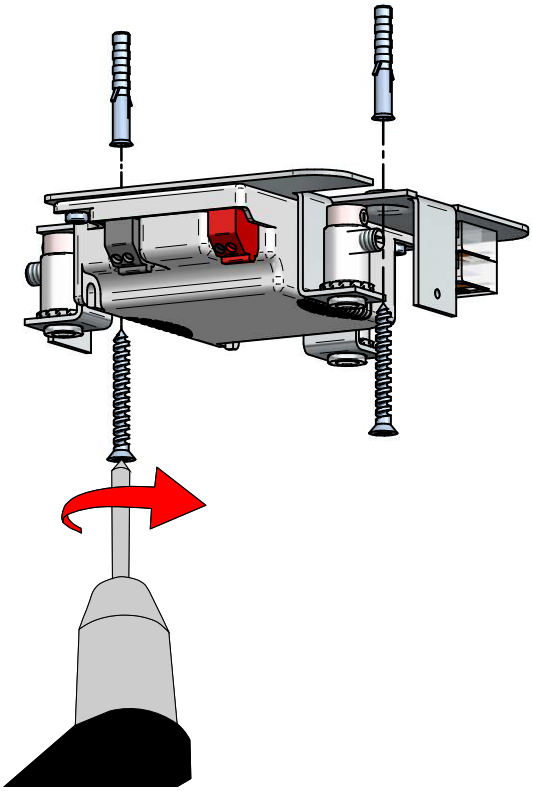

5

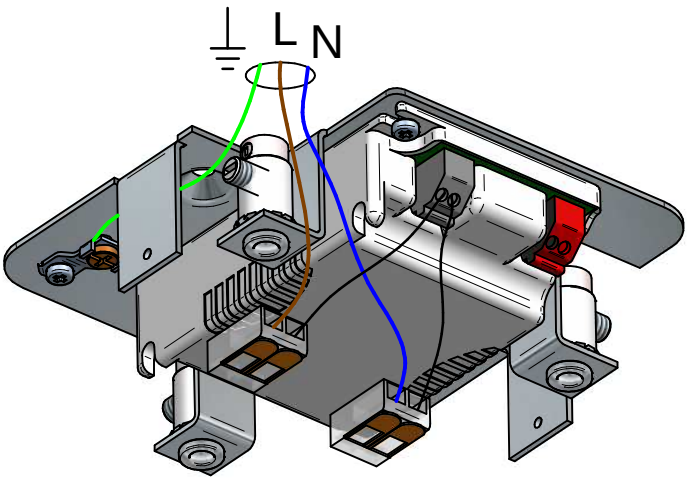

6

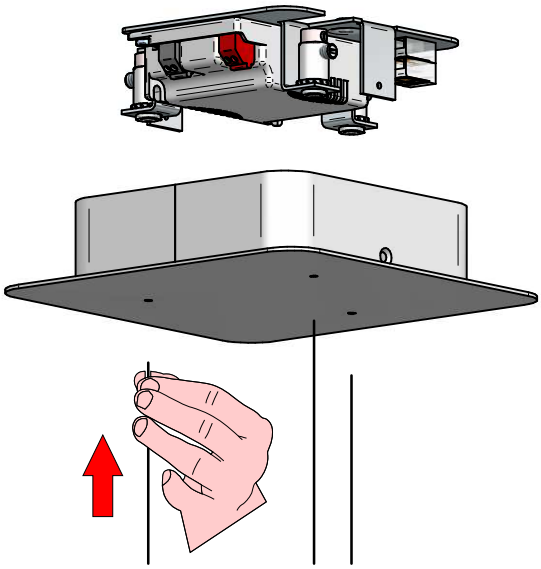

7

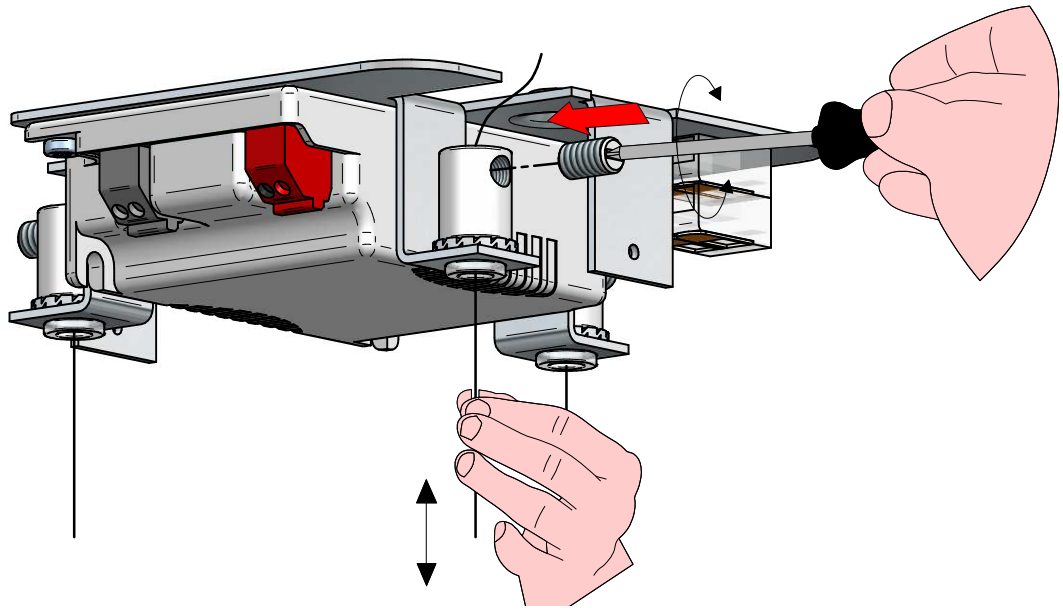

8

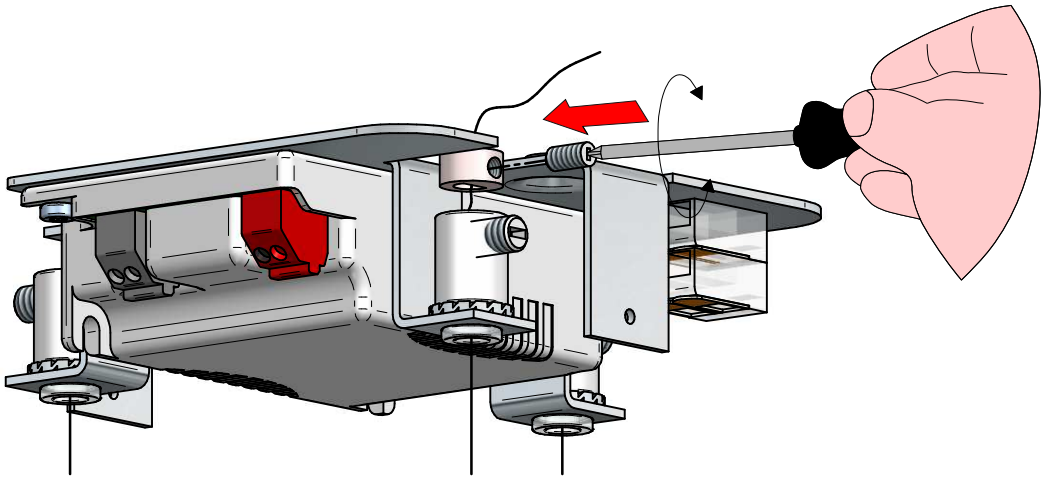

9

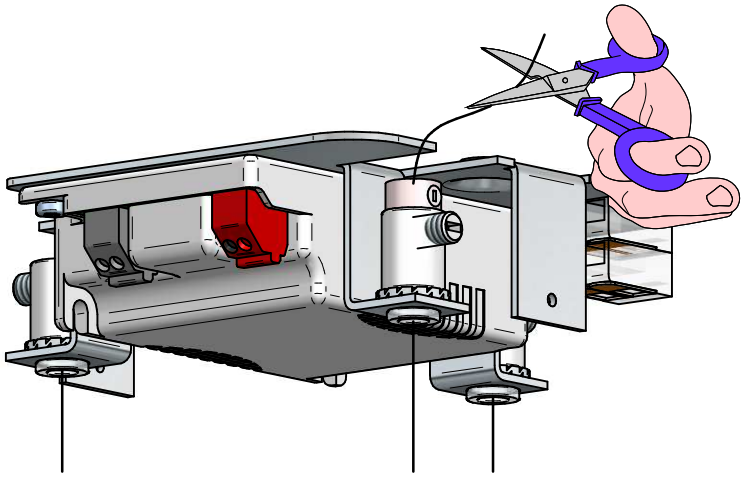

10

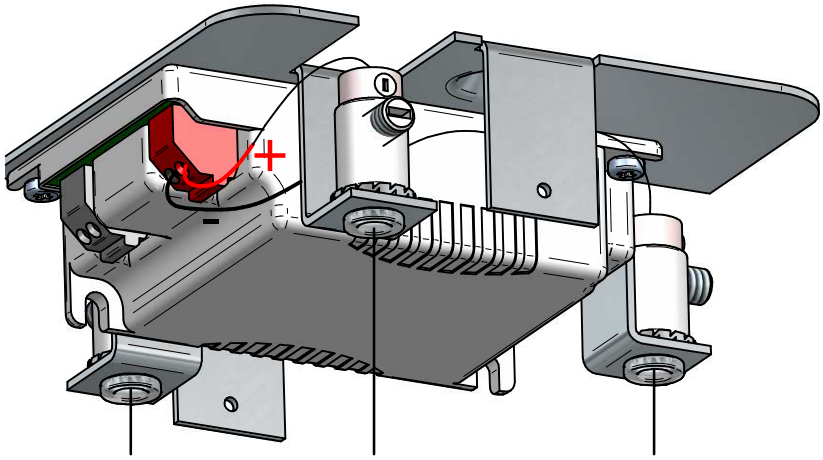

11

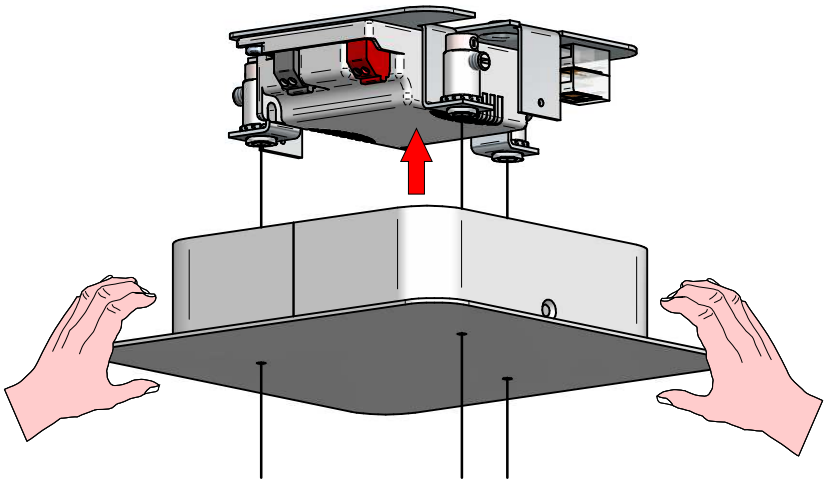

12

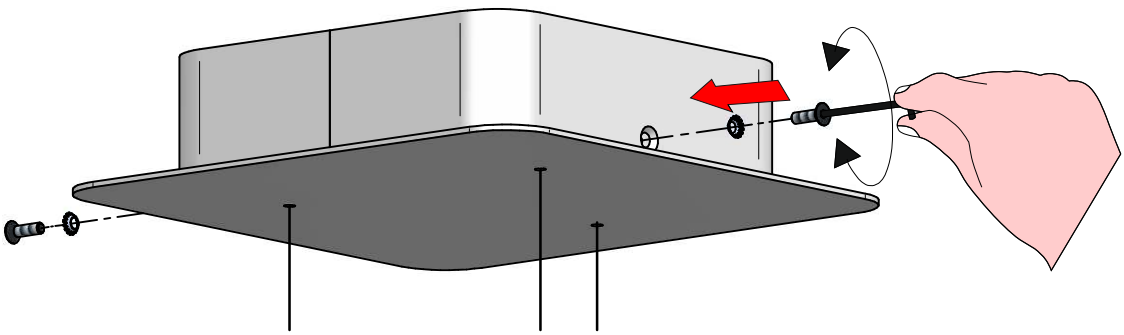

8935
ARUBA
rev:00

linea light

Decorative

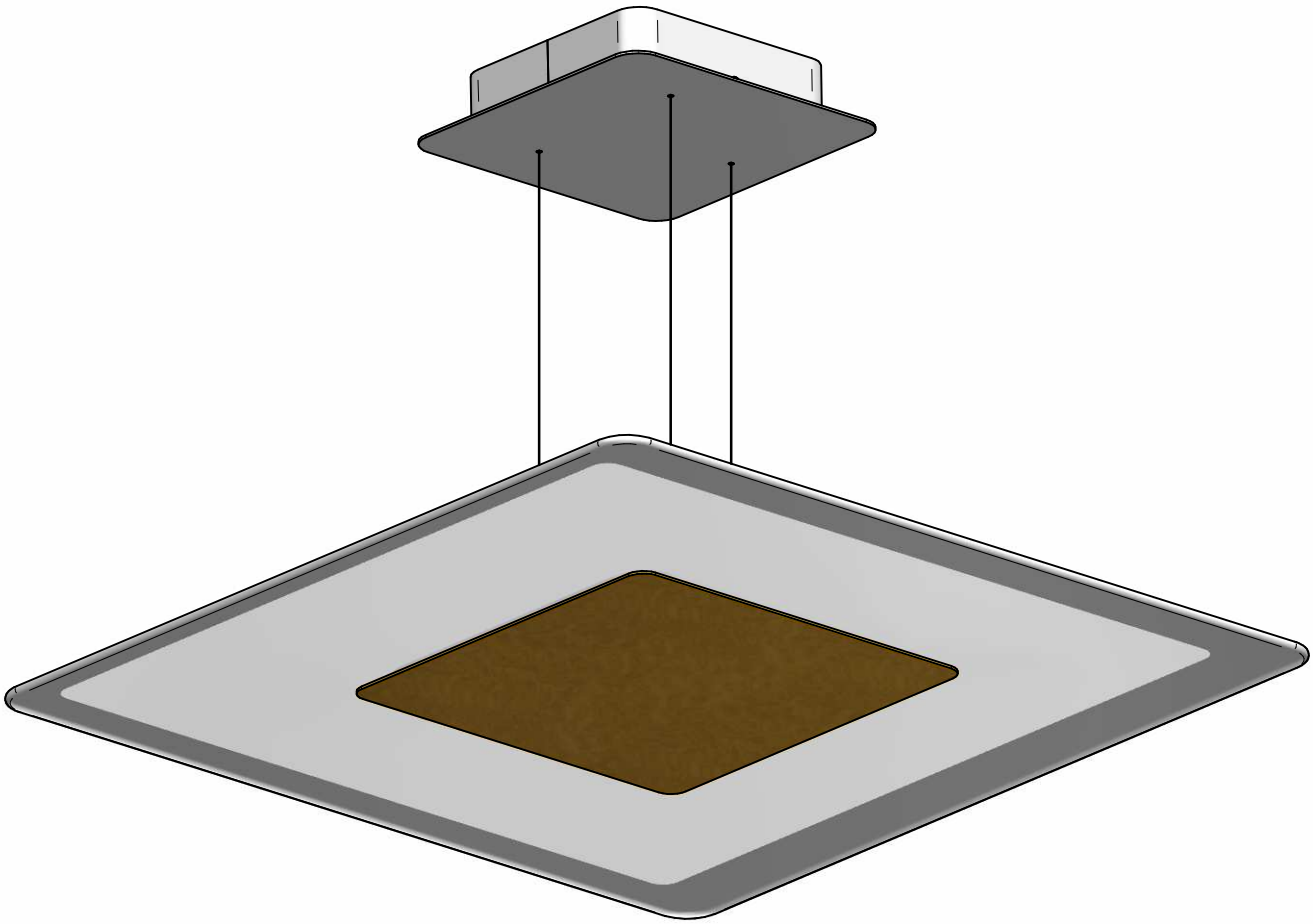

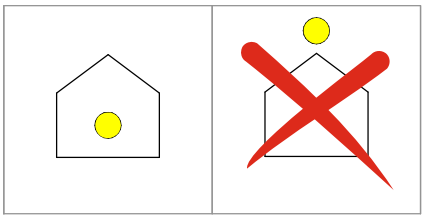

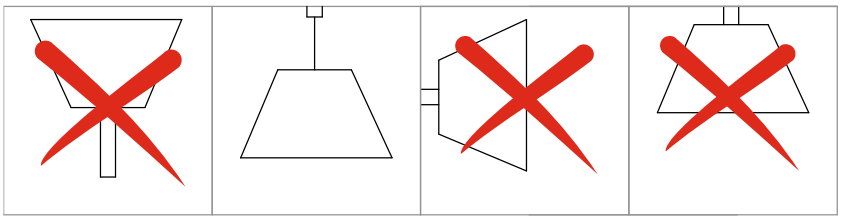

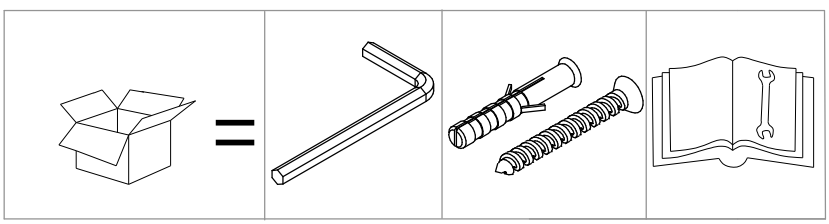

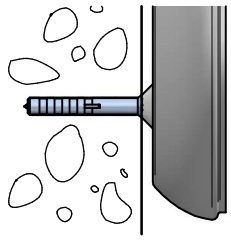



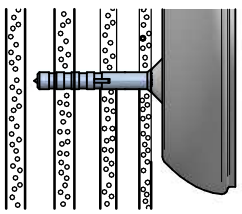



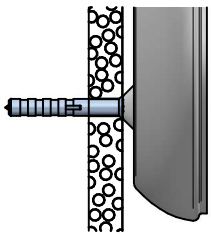



1

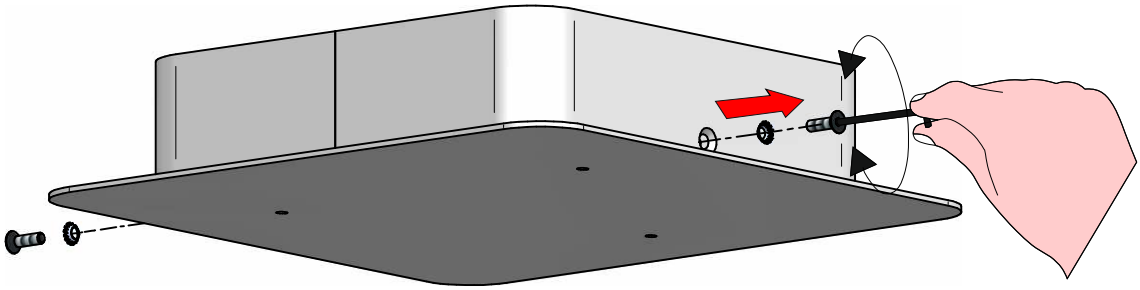

2

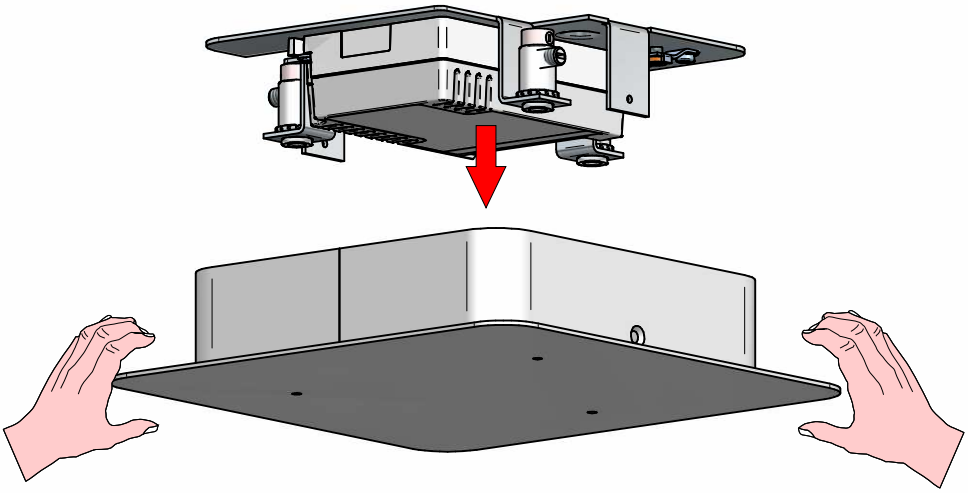

3

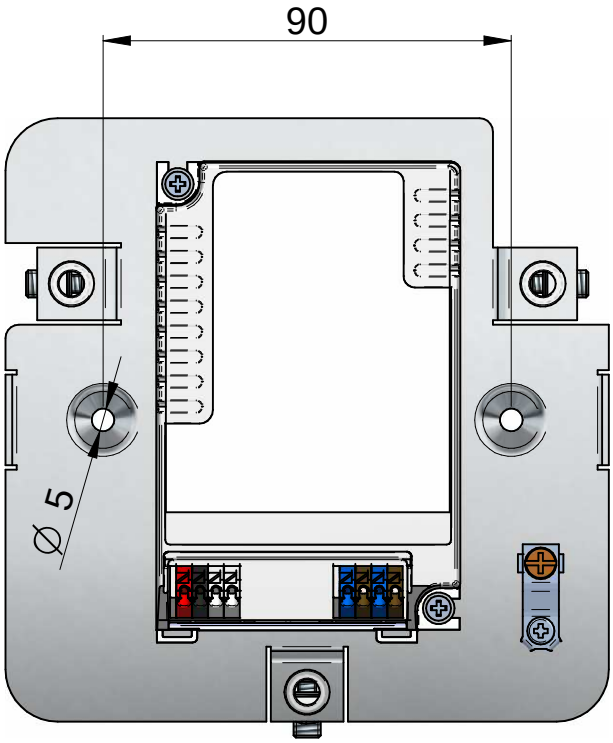

4

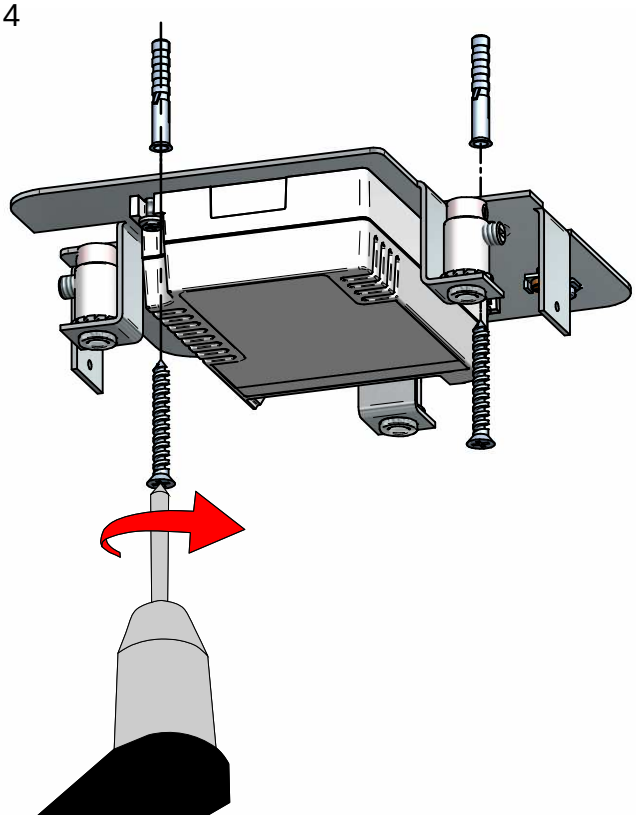

5

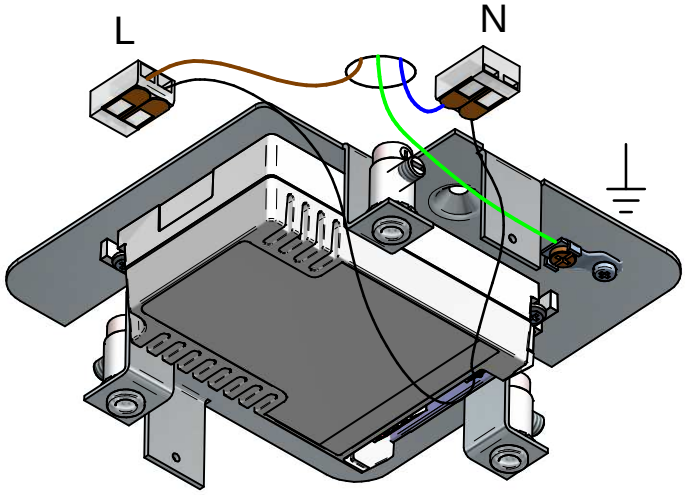

6

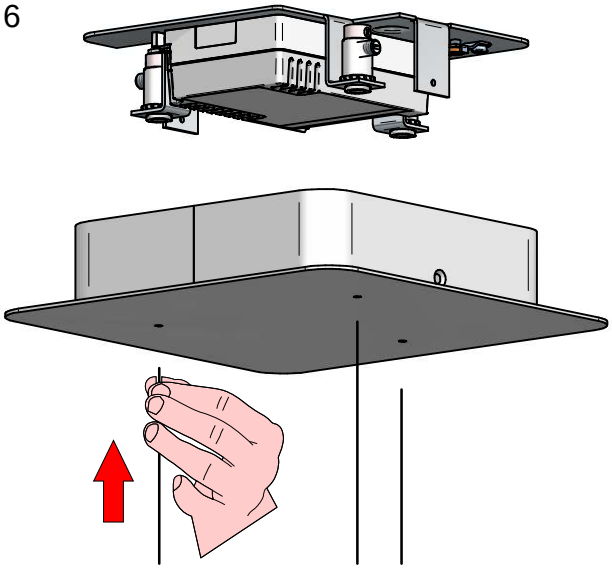

7

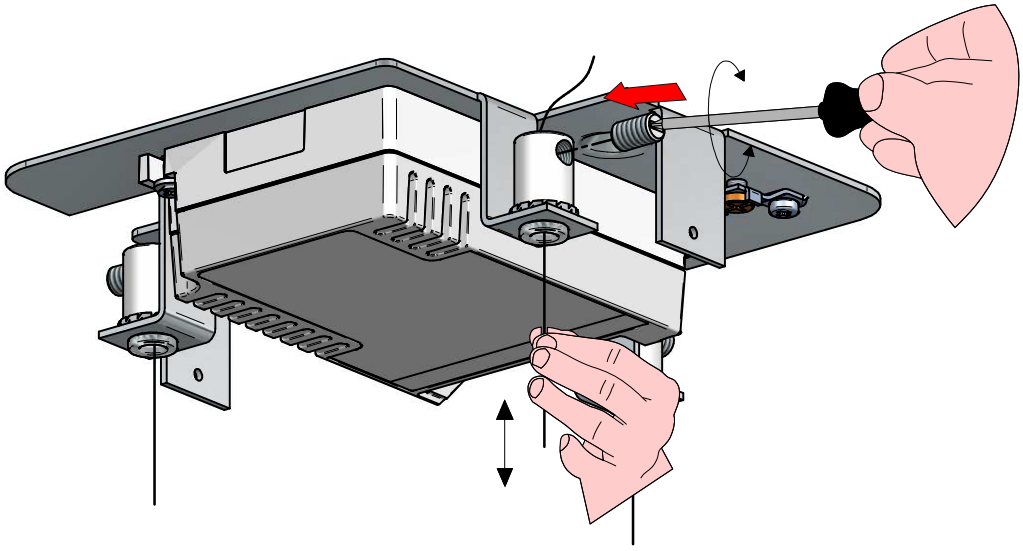

8

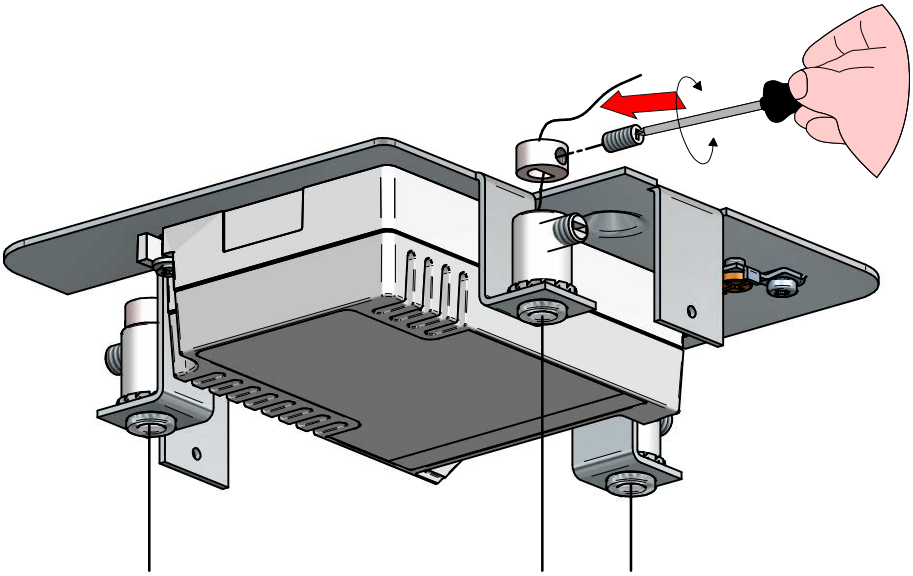

9

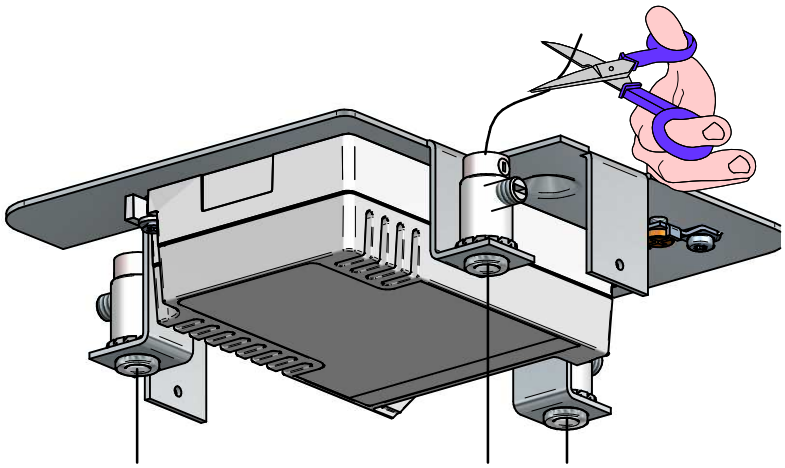

10

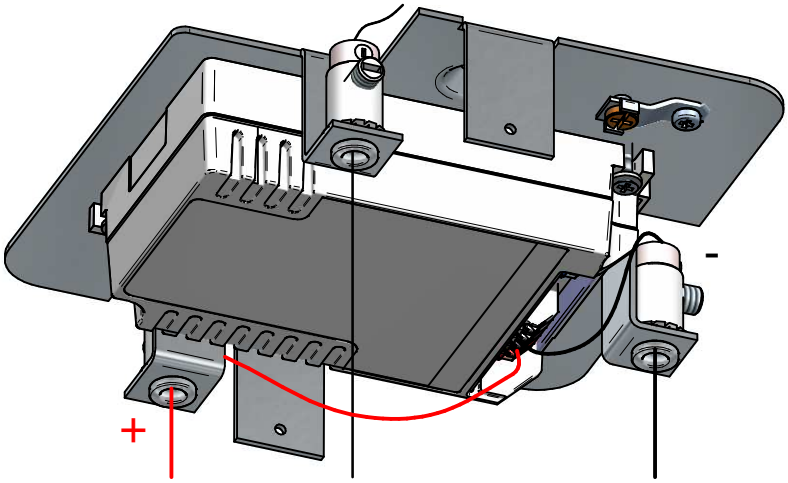

11

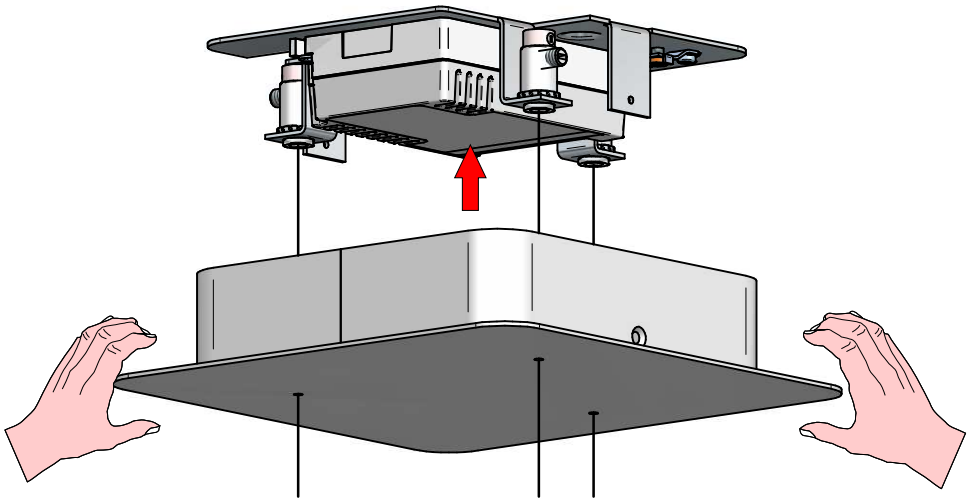

12

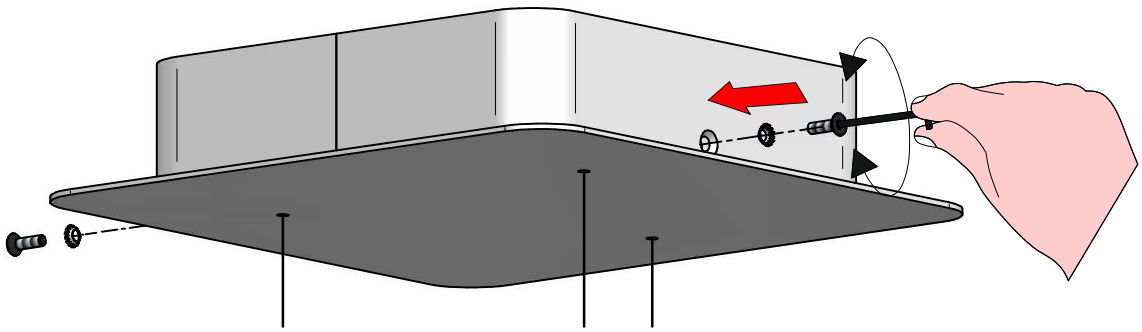

8935
ARUBA
rev:00

linea light

Decorative

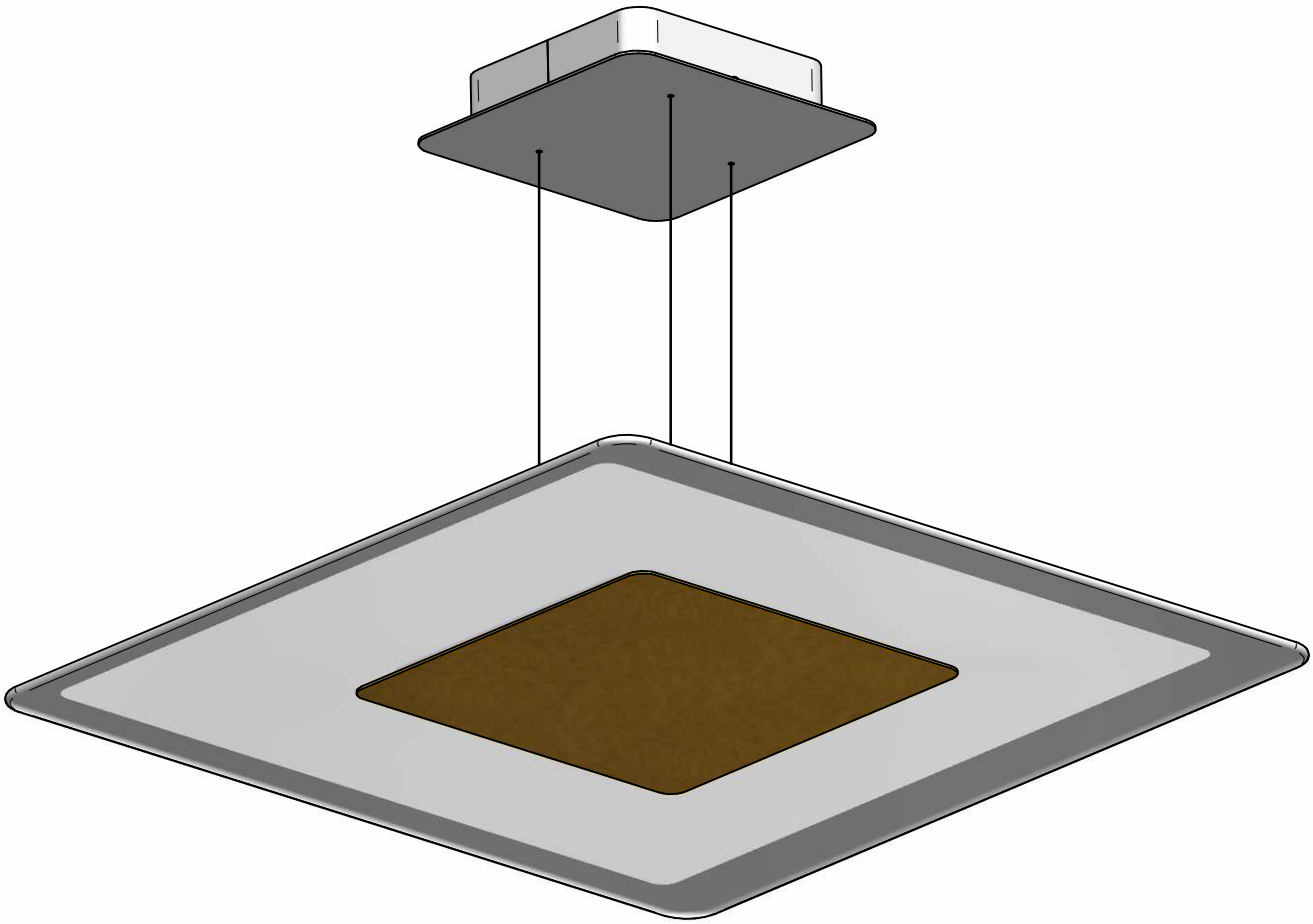

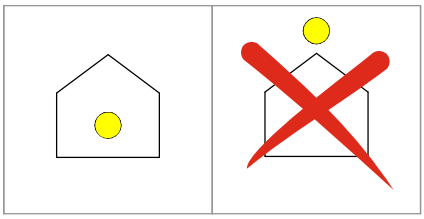

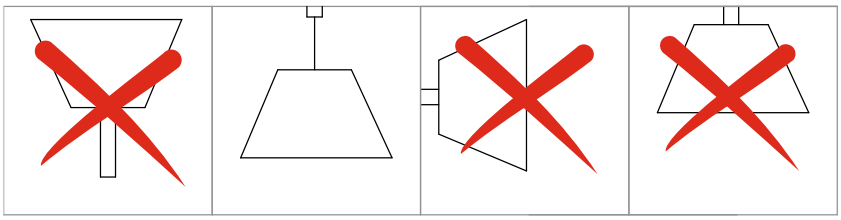

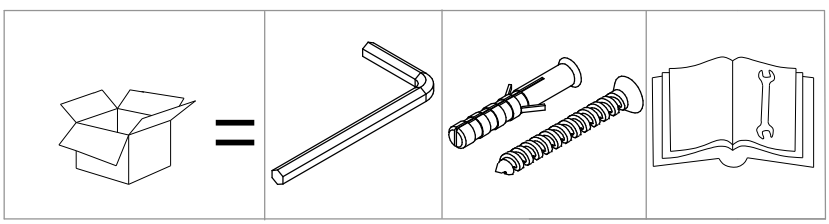

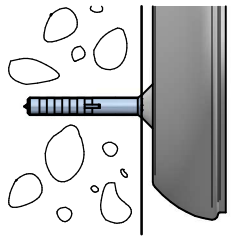



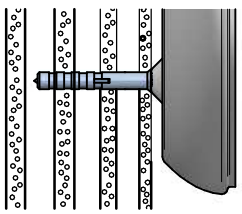



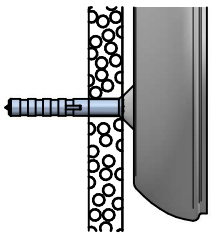



1

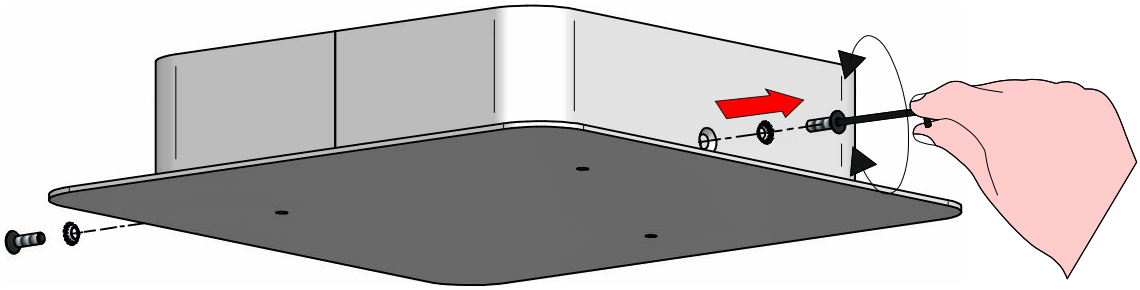

2

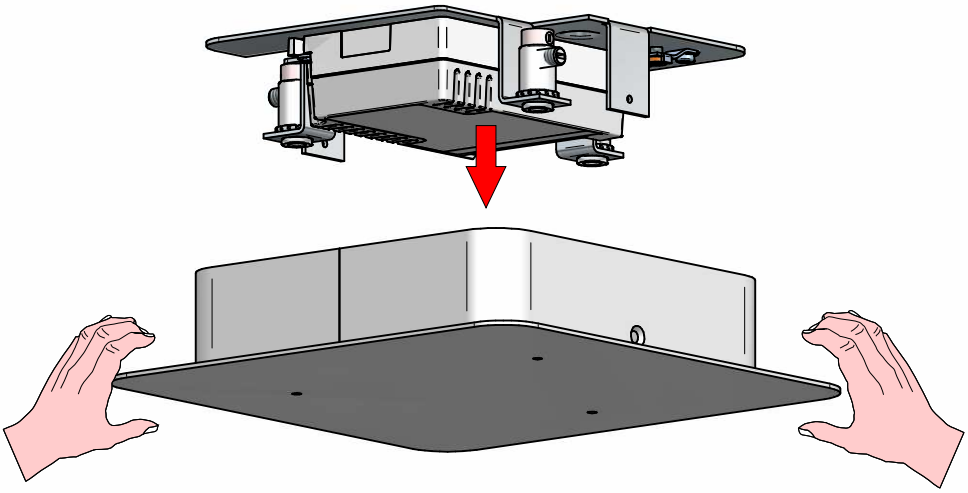

3

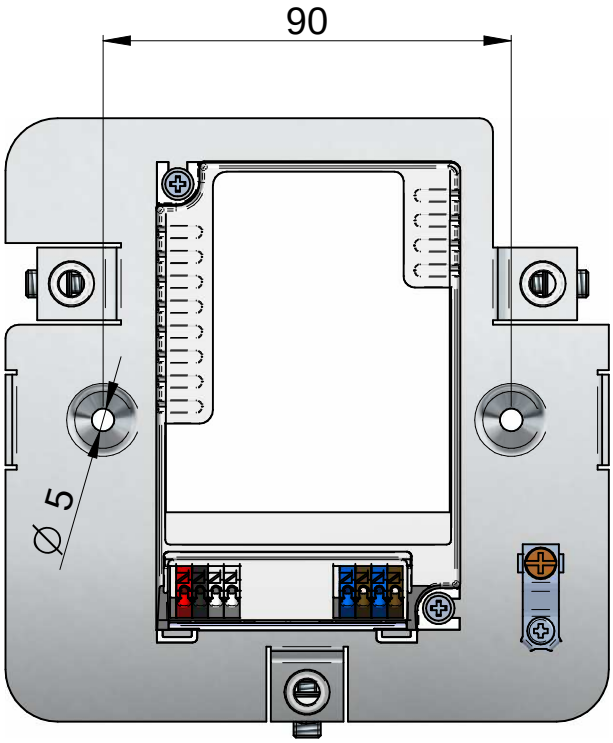

4

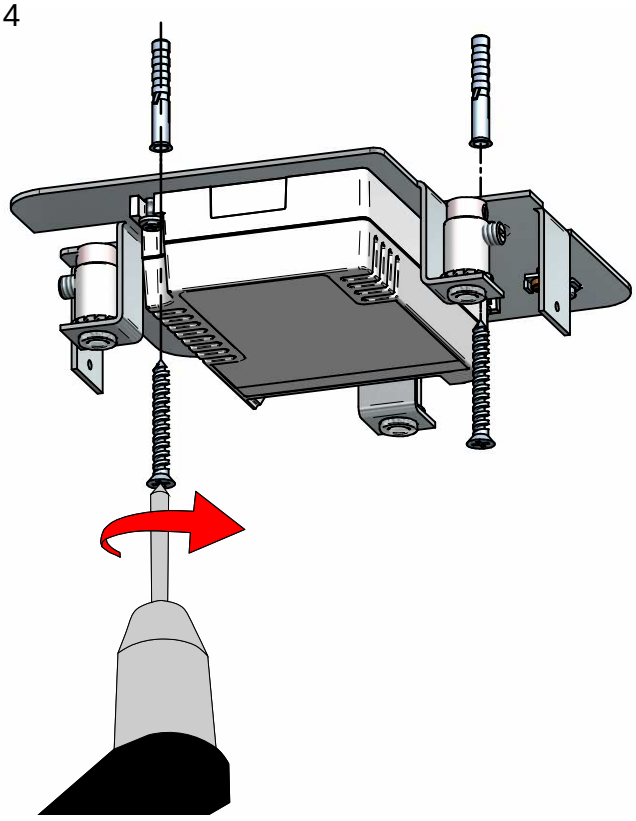

5

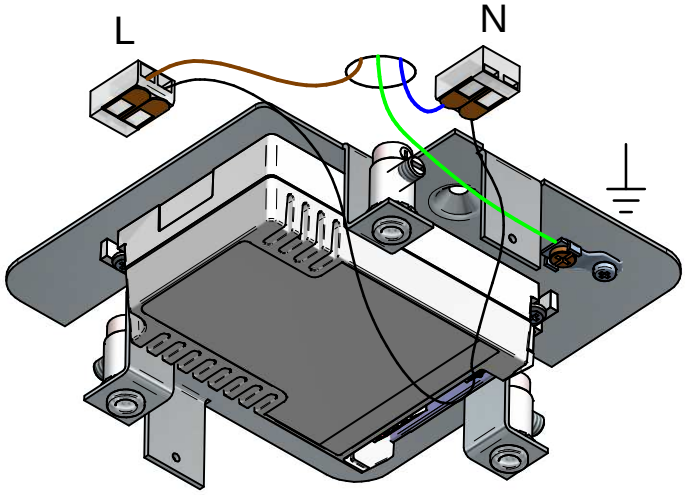

6

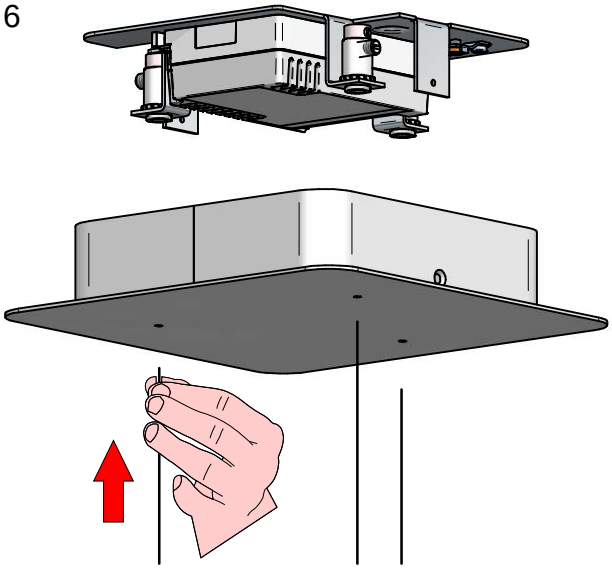

7

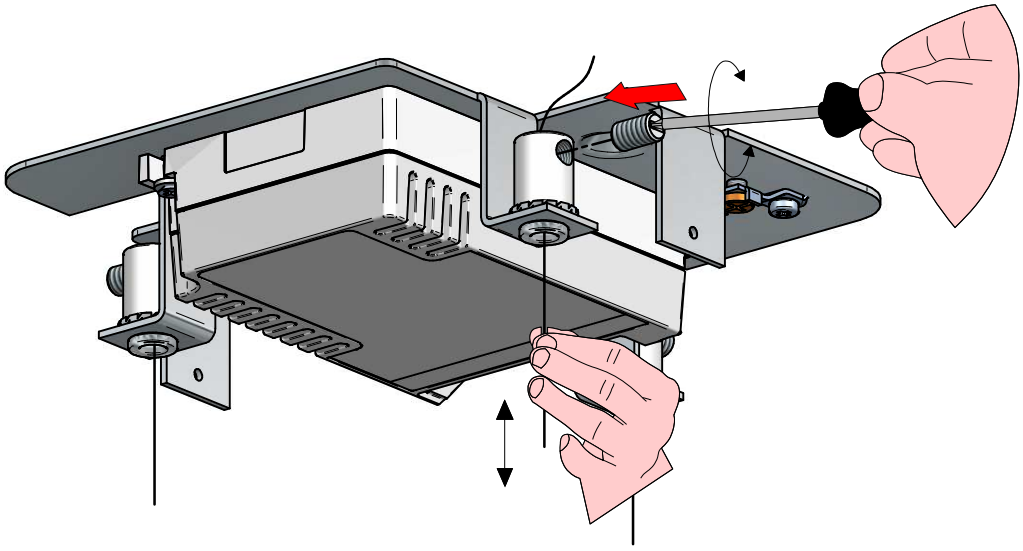

8

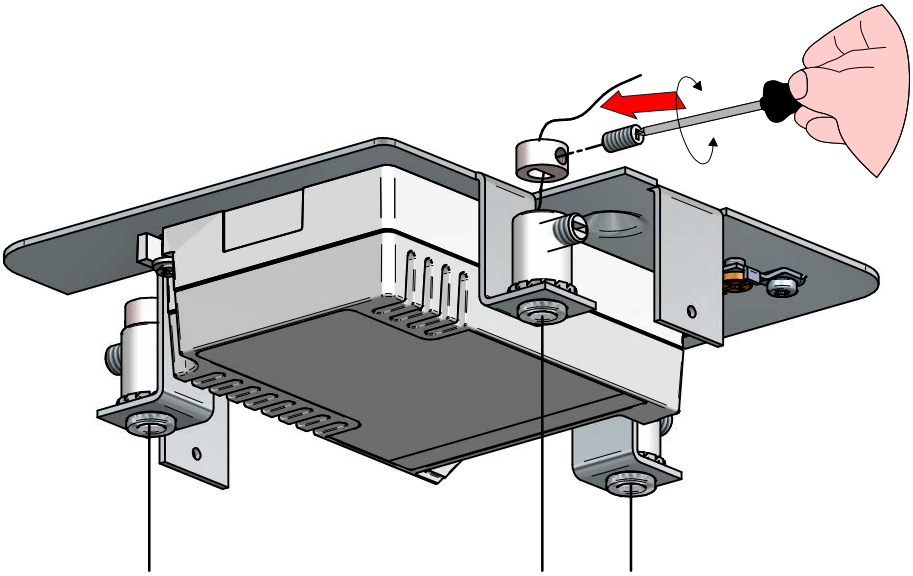

9

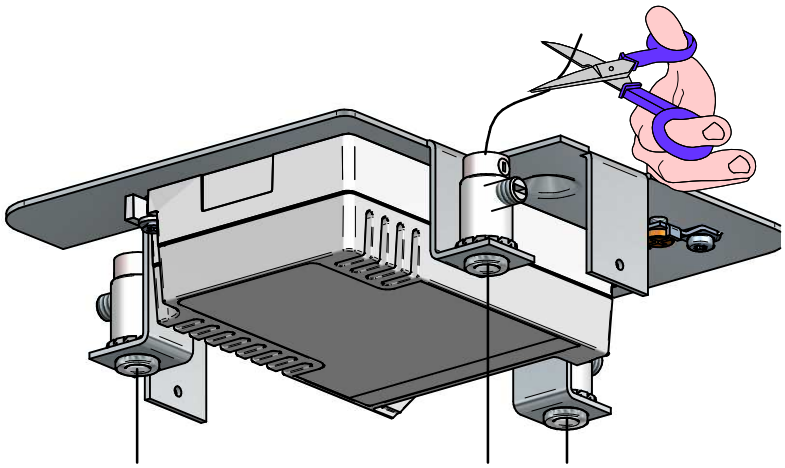

10

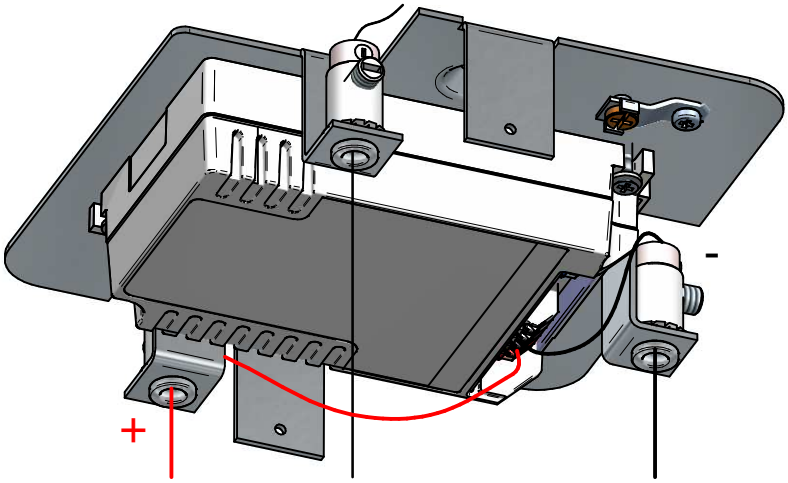

11

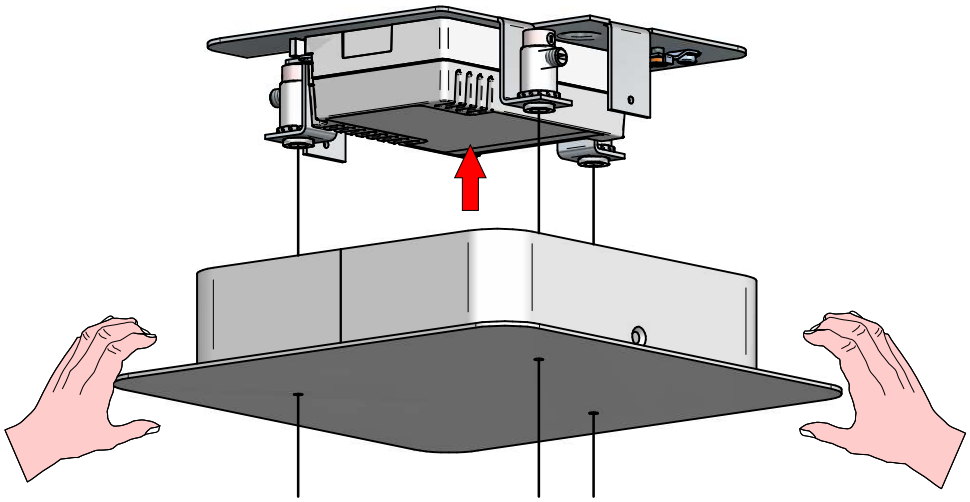

12

