REGOLO 2.0
rev:1

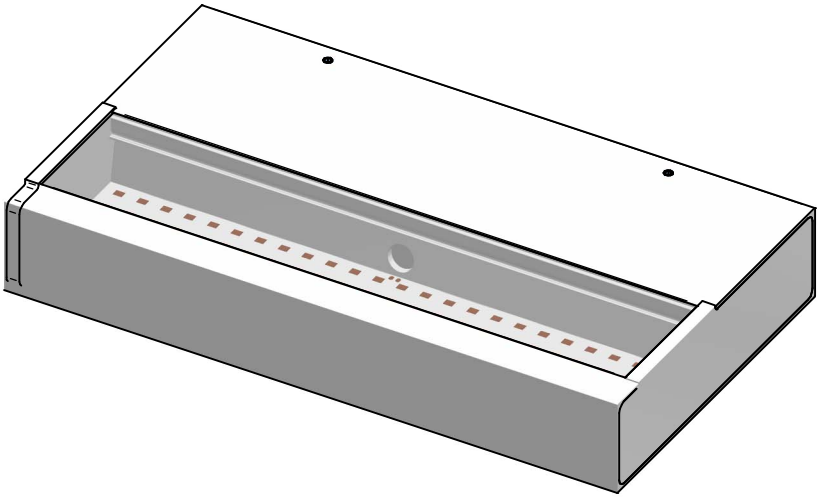

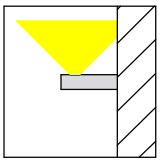

Code	Frame color	Length	Led color
CA036DWHWDI	White	160 mm	3000K
CA036DWHMDI	White	160 mm	2700K
CA036DBBWDI	Black	160 mm	3000K
CA036DBBMDI	Black	160 mm	2700K
CA036DMGWDI	Gray	160 mm	3000K
CA036DMGMDI	Gray	160 mm	2700K
CA037DWHWDI	White	240 mm	3000K
CA037DWHMDI	White	240 mm	2700K
CA037DBBWDI	Black	240 mm	3000K
CA037DBBMDI	Black	240 mm	2700K
CA037DMGWDI	Gray	240 mm	3000K
CA037DMGMDI	Gray	240 mm	2700K
CA038DWHWDI	White	320 mm	3000K
CA038DWHMDI	White	320 mm	2700K
CA038DBBWDI	Black	320 mm	3000K
CA038DBBMDI	Black	320 mm	2700K
CA038DMGWDI	Gray	320 mm	3000K
CA038DMGMDI	Gray	320 mm	2700K
CA039DWHWDI	White	620 mm	3000K
CA039DWHMDI	White	620 mm	2700K
CA039DBBWDI	Black	620 mm	3000K
CA039DBBMDI	Black	620 mm	2700K
CA039DMGWDI	Gray	620 mm	3000K
CA039DMGMDI	Gray	620 mm	2700K

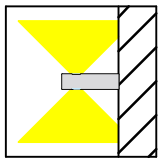

Code	Frame color	Length	Led color
CA040DWHWDI	White	160 mm	3000K
CA040DWHMDI	White	160 mm	2700K
CA040DBBWDI	Black	160 mm	3000K
CA040DBBMDI	Black	160 mm	2700K
CA040DMGWDI	Gray	160 mm	3000K
CA040DMGMDI	Gray	160 mm	2700K
CA041DWHWDI	White	240 mm	3000K
CA041DWHMDI	White	240 mm	2700K
CA041DBBWDI	Black	240 mm	3000K
CA041DBBMDI	Black	240 mm	2700K
CA041DMGWDI	Gray	240 mm	3000K
CA041DMGMDI	Gray	240 mm	2700K
CA042DWHWDI	White	320 mm	3000K
CA042DWHMDI	White	320 mm	2700K
CA042DBBWDI	Black	320 mm	3000K
CA042DBBMDI	Black	320 mm	2700K
CA042DMGWDI	Gray	320 mm	3000K
CA042DMGMDI	Gray	320 mm	2700K
CA043DWHWDI	White	620 mm	3000K
CA043DWHMDI	White	620 mm	2700K
CA043DBBWDI	Black	620 mm	3000K
CA043DBBMDI	Black	620 mm	2700K
CA043DMGWDI	Gray	620 mm	3000K
CA043DMGMDI	Gray	620 mm	2700K

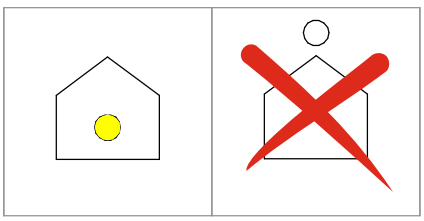

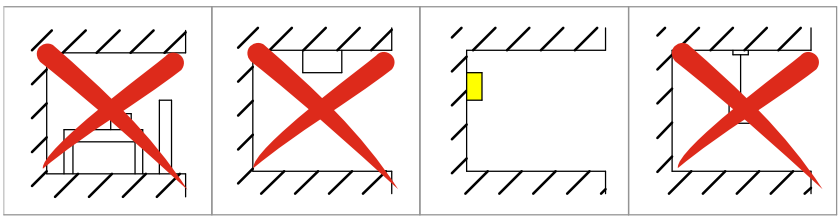

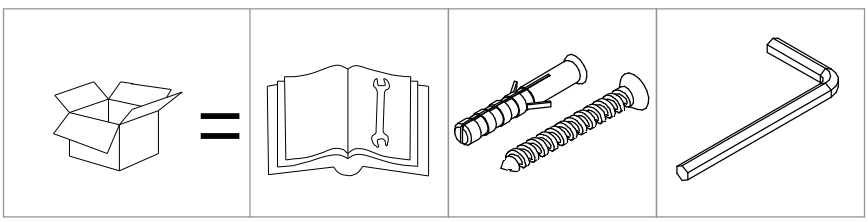

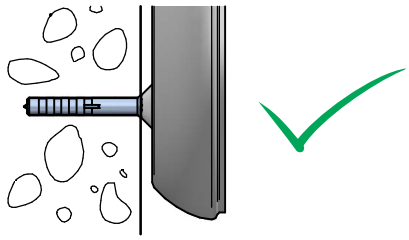

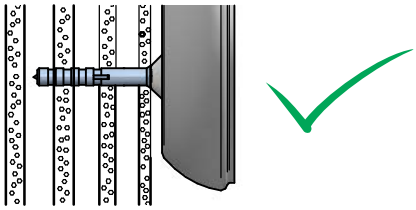

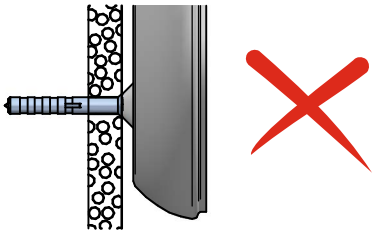

1

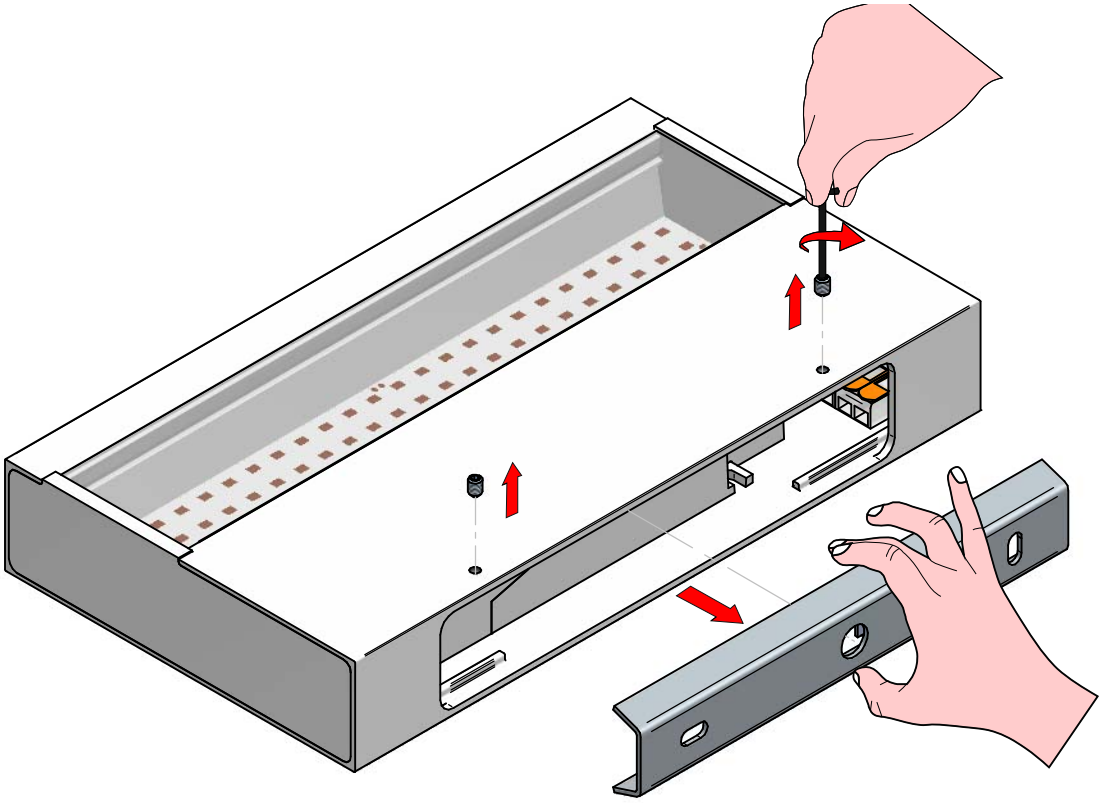

2

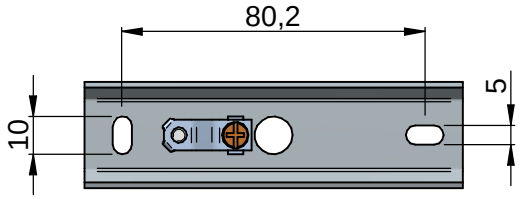

CA036DWHWDI	CA040DWHWDI
CA036DWHMDI	CA040DWHMDI
CA036DBBWDI	CA040DBBWDI
CA036DBBMDI	CA040DBBMDI
CA036DMGWDI	CA040DMGWDI
CA036DMGMDI	CA040DMGMDI

2.1

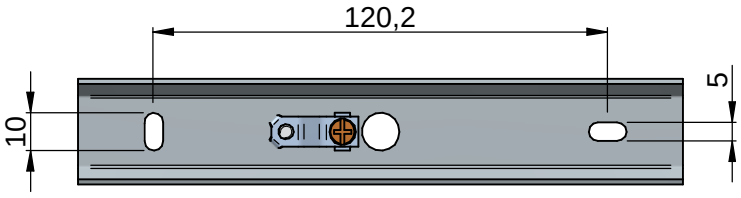

CA037DWHWDI	CA041DWHWDI
CA037DWHMDI	CA041DWHMDI
CA037DBBWDI	CA041DBBWDI
CA037DBBMDI	CA041DBBMDI
CA037DMGWDI	CA041DMGWDI
CA037DMGMDI	CA041DMGMDI
CA038DWHWDI	CA042DWHWDI
CA038DWHMDI	CA042DWHMDI
CA038DBBWDI	CA042DBBWDI
CA038DBBMDI	CA042DBBMDI
CA038DMGWDI	CA042DMGWDI
CA038DMGMDI	CA042DMGMDI

2.2

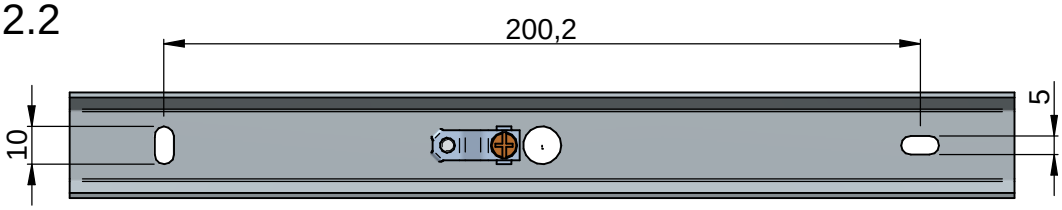

CA039DWHWDI	CA043DWHWDI
CA039DWHMDI	CA043DWHMDI
CA039DBBWDI	CA043DBBWDI
CA039DBBMDI	CA043DBBMDI
CA039DMGWDI	CA043DMGWDI
CA039DMGMDI	CA043DMGMDI

3

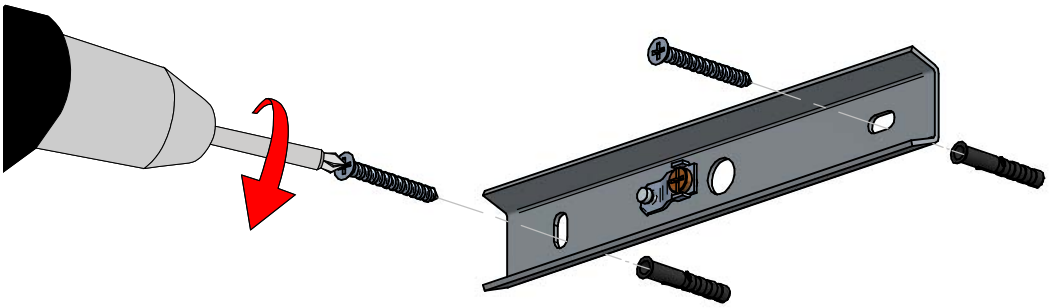

4

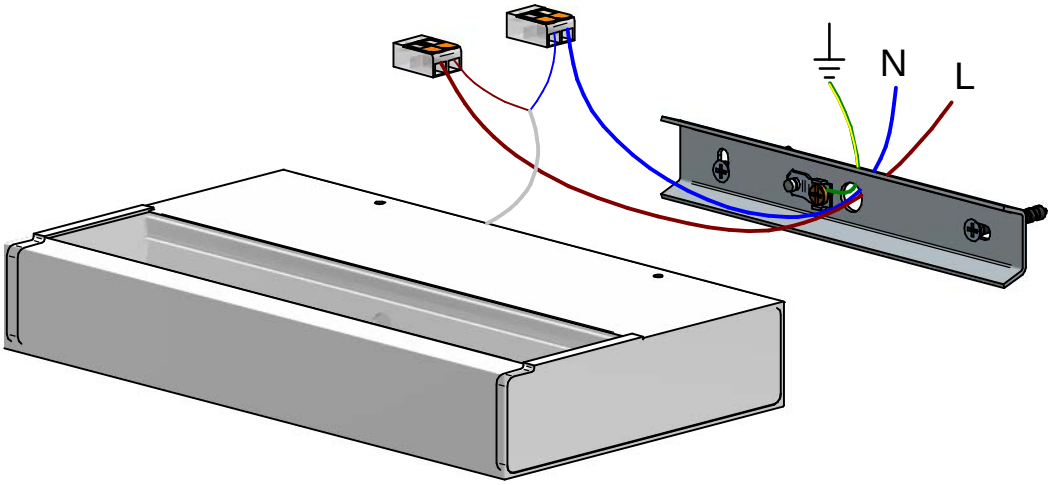



KIT0026 Dimmer
NOT INCLUDED

5

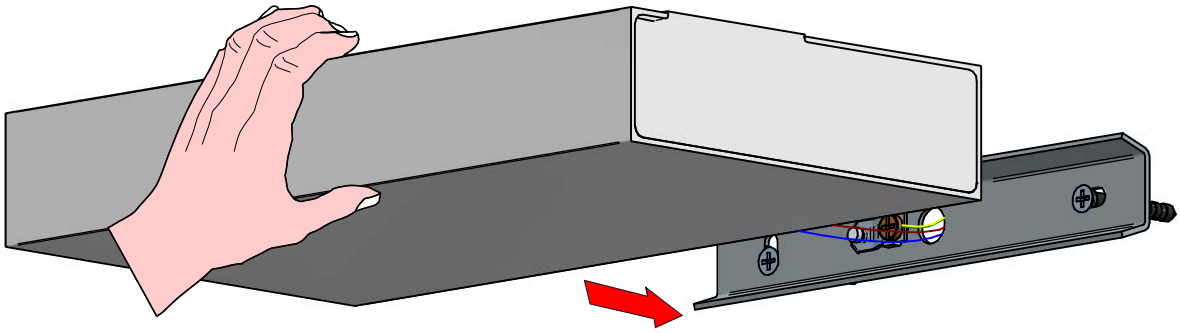

6

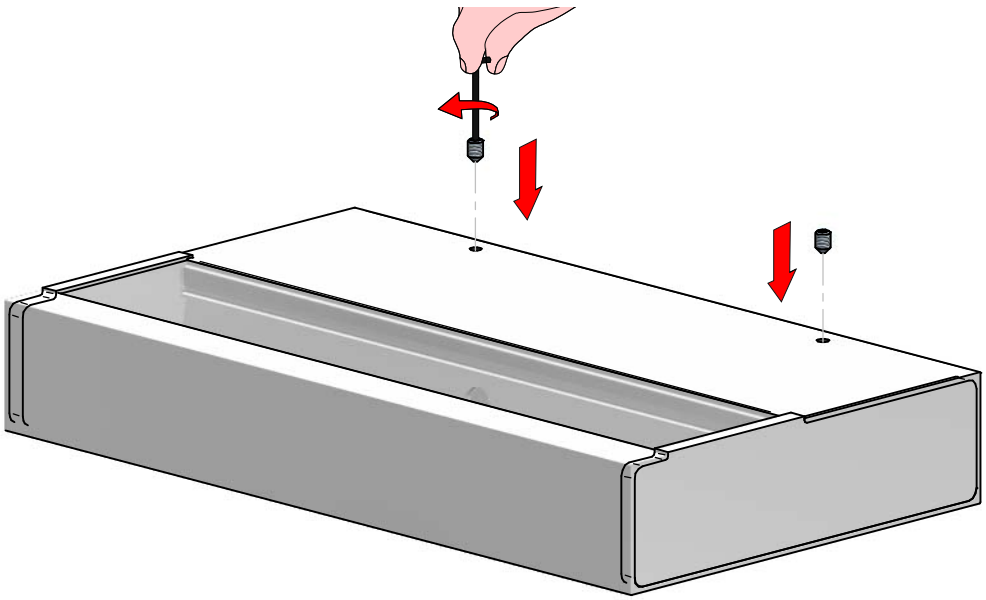

ISTRUZIONI PER IL LAVAGGIO DELL'APPARECCHIO D'ILLUMINAZIONE
LUMINAIRE CARE INSTRUCTIONS
ISTRUCCIONES PARA LIMPIAR LA LUMINARA
INSTRUCTIONS POUR LE LAVAGE DE L'APPAREIL D'ECLAIRAGE
ANLEITUNG ZUR REINIGUNG DES BELEUCHTUNGSGERATS

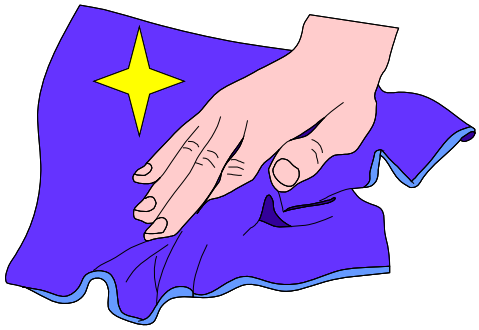



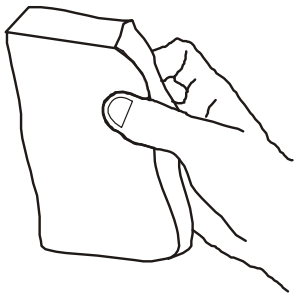

IT - ATTENZIONE!!!

Lavare la superficie del diffusore luce con panno umido, utilizzando solo acqua e sapone neutro.

EN - WARNING!!!

Wipe clean with a cloth damped in water with neutral detergent.

ES - ATENCION!!!

Limpie la superficie del difusor con un pano humedecido con agua y jabon neutro.

FR - ATTENTION!!!

Laver la surface du diffuseur de lumiere a l'aide d'un chiffon humide et en utlisant seulement de l'eau et du savon neutre.

DE - ACHTUNG!!!

Die oberflache vom lampenschirm mit einem feuchten lappen reinigen. De lappen mit wasser und neutralseife befeuchten.

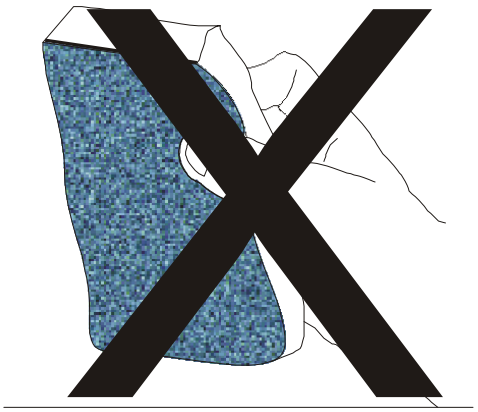



IT - ATTENZIONE!!!

Non utilizzare panni abrasivi e/o solventi.

EN - WARNING!!!

Avoiding the use of chemical solvents and/or abrasive cloths.

ES - ATENCION!!!

No utilizar panos abrasivos y solventes.

FR - ATTENTION!!!

Ne pas utiliser de chiffons abrasifs ou de dissolvants.

DE - ACHTUNG!!!

Abschleifende tuche und/oder losungmittel nicht benutzen.