9135
IGLOO
rev:00

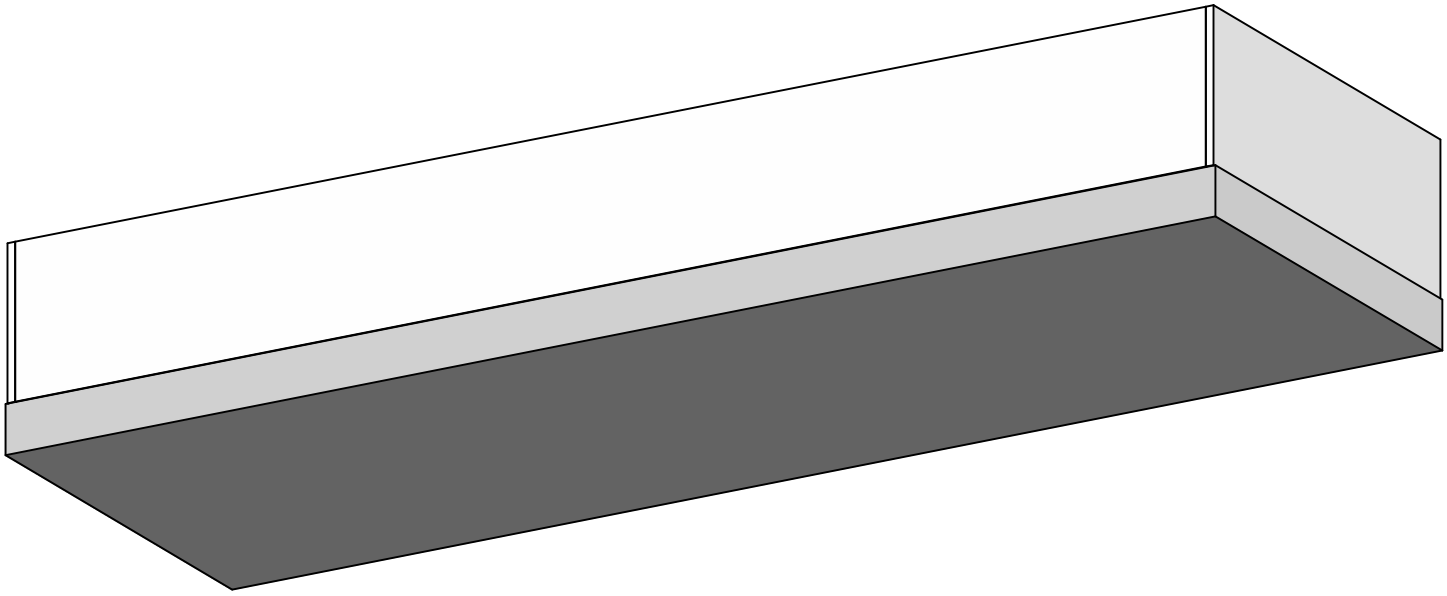

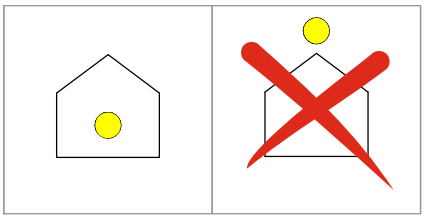

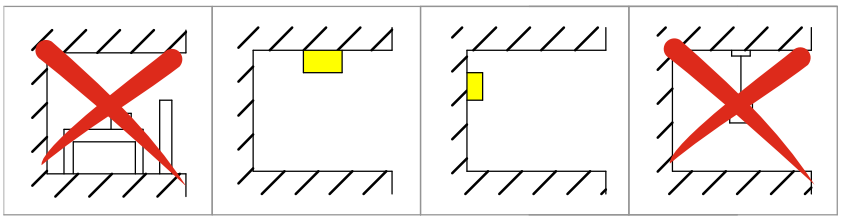

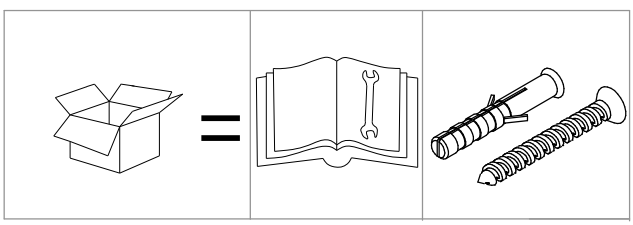

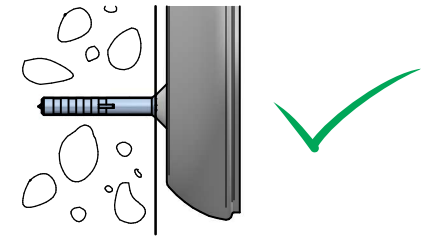

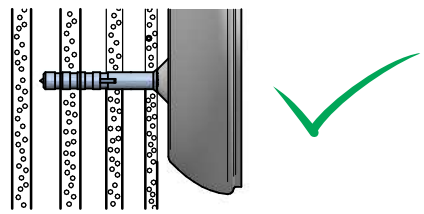

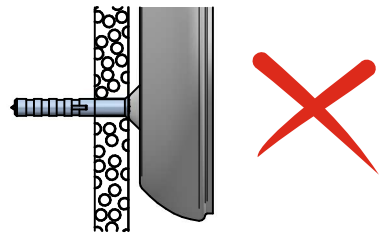

1

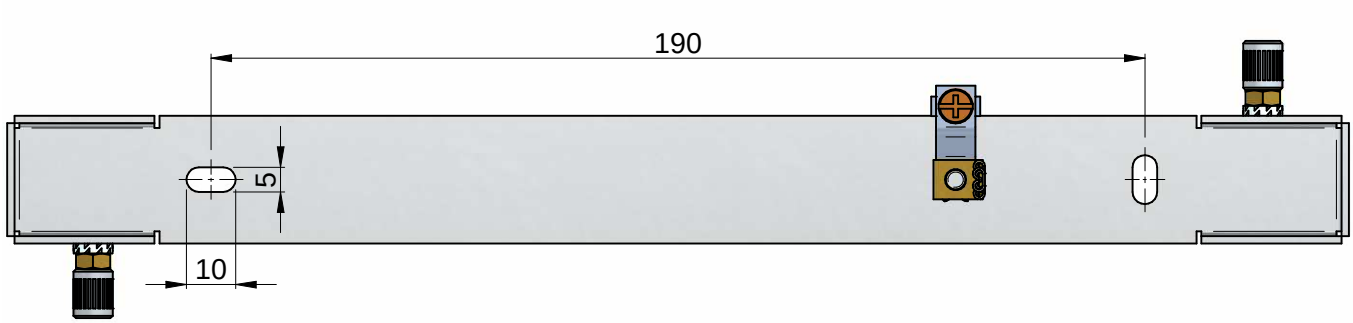

2

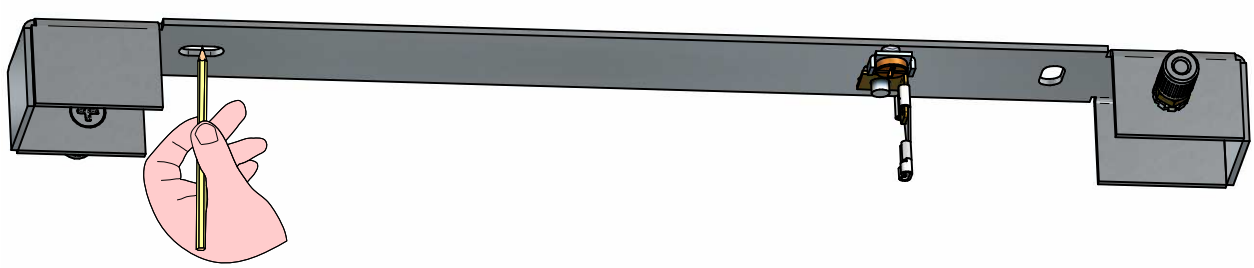

3

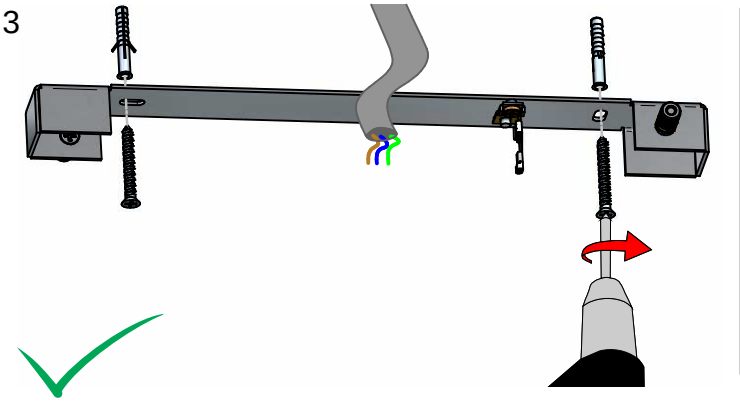

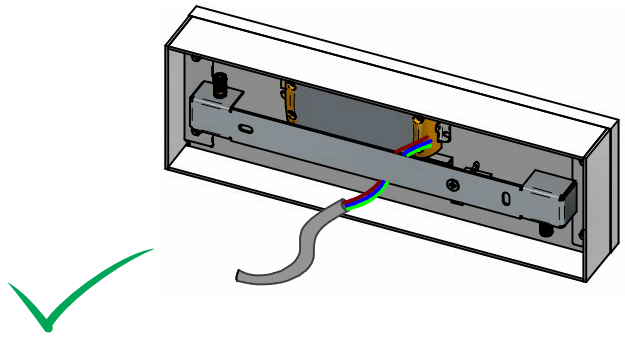

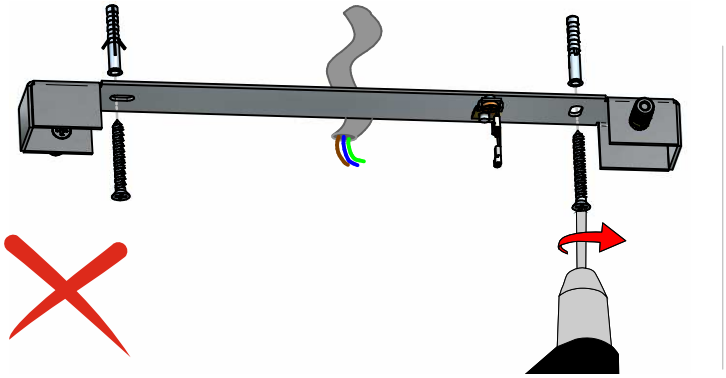

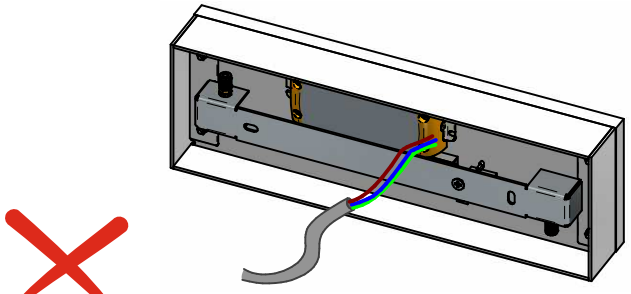

4

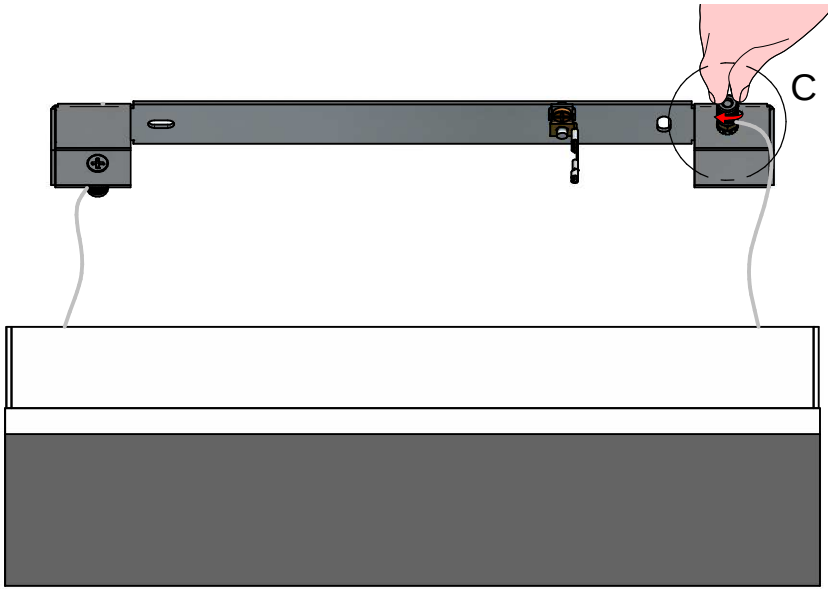

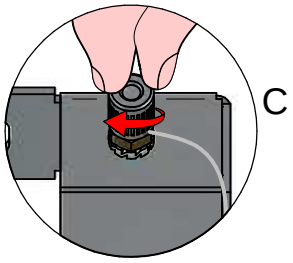

5

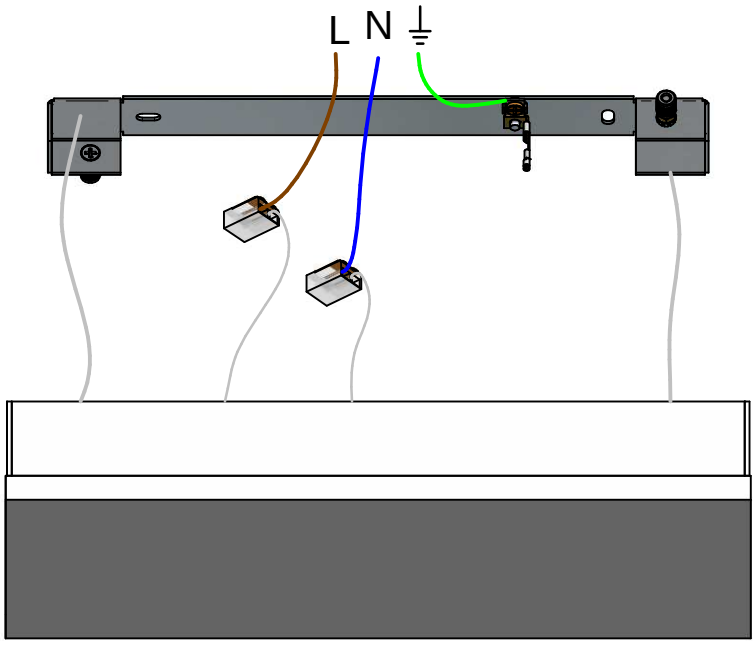

6

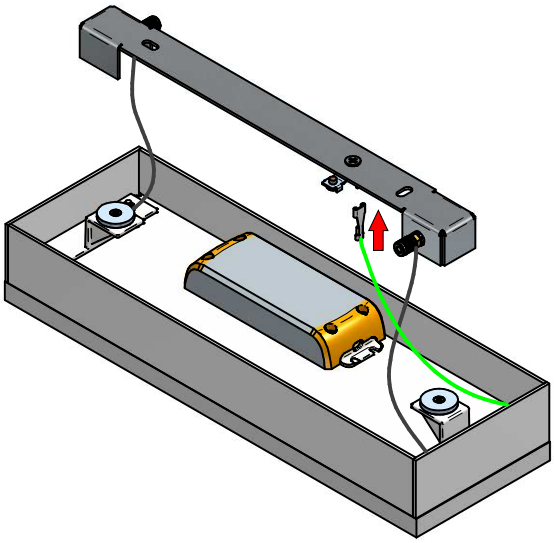

7

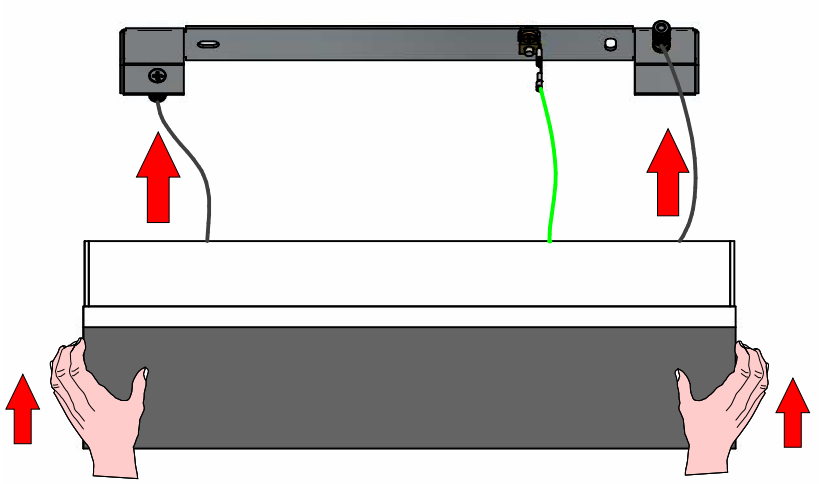

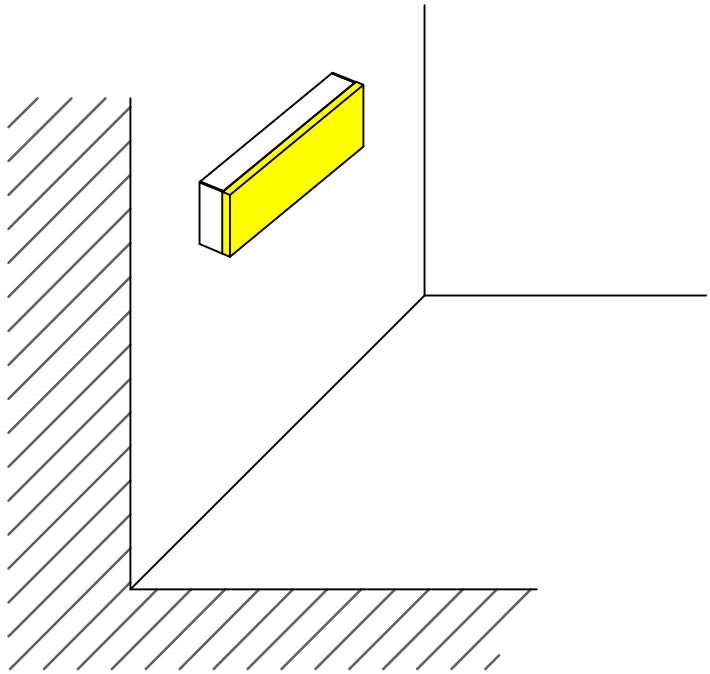

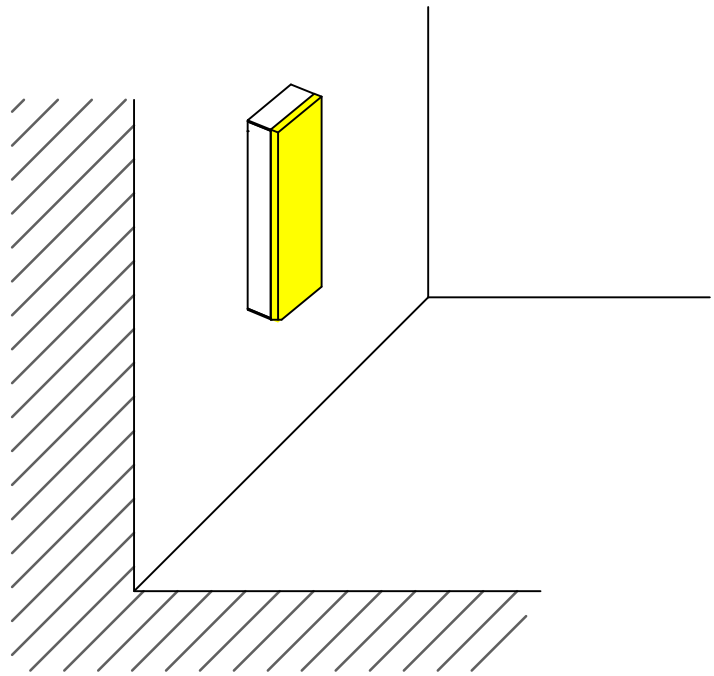

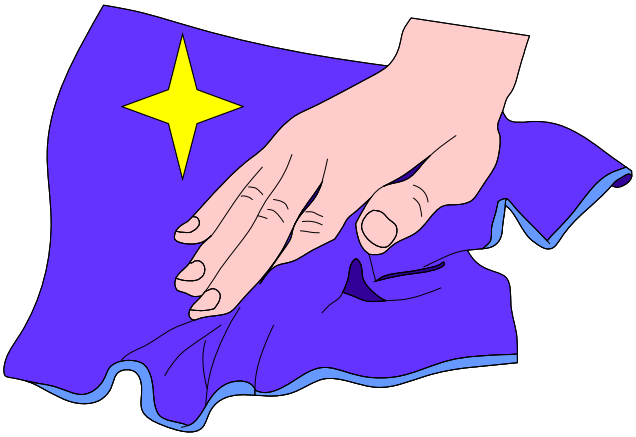



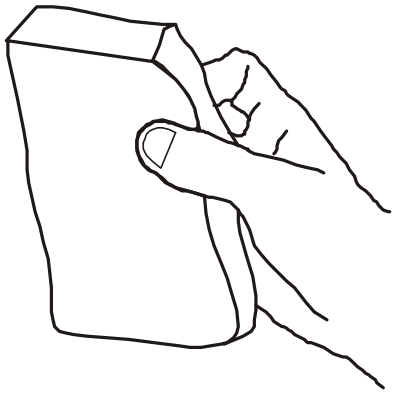

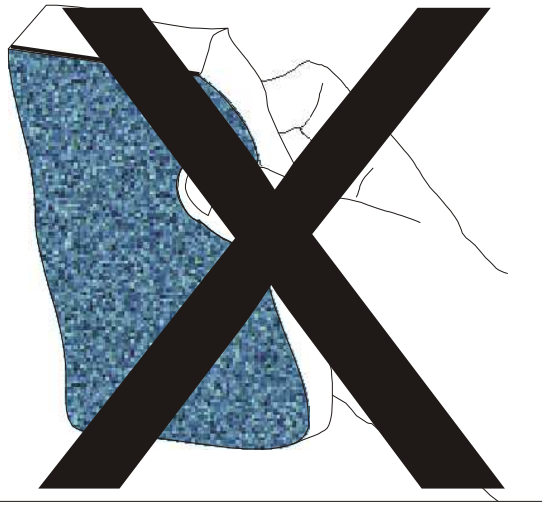



9136
IGLOO
rev:00

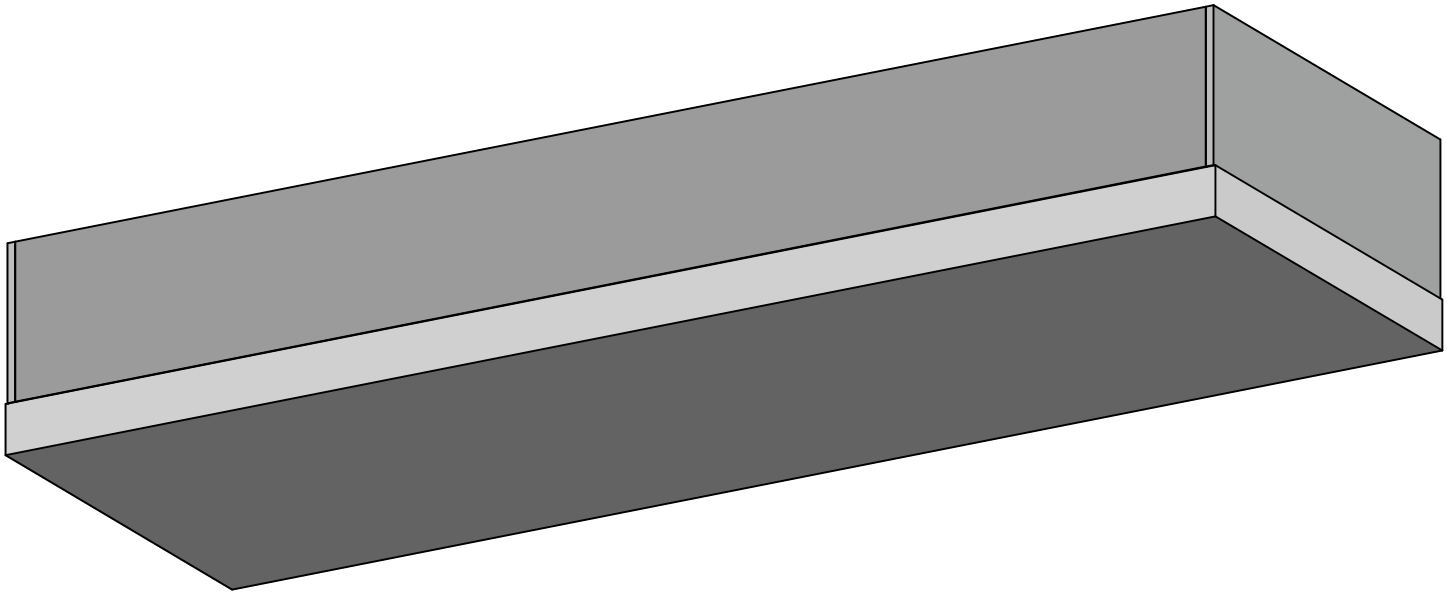

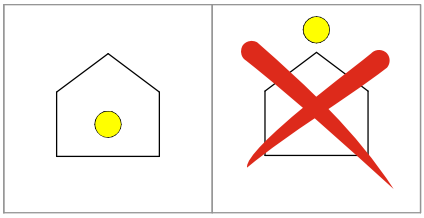

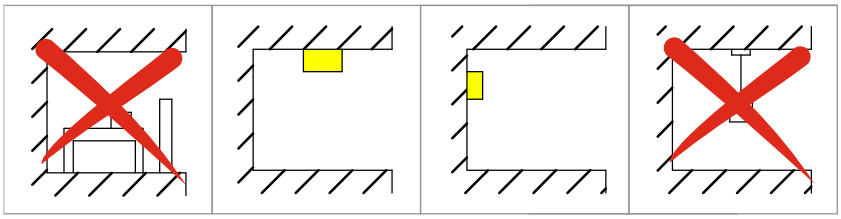

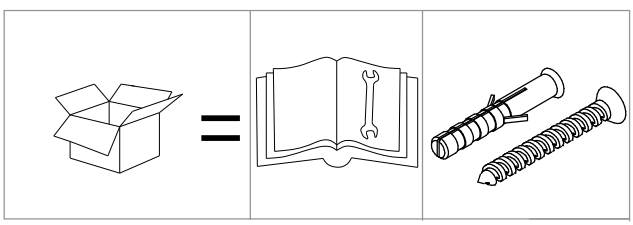

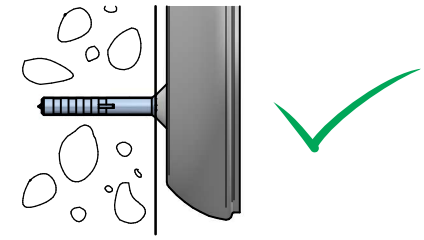

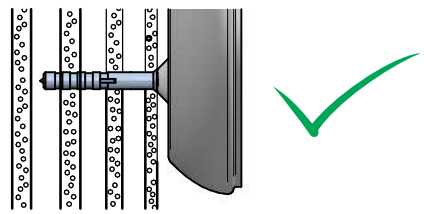

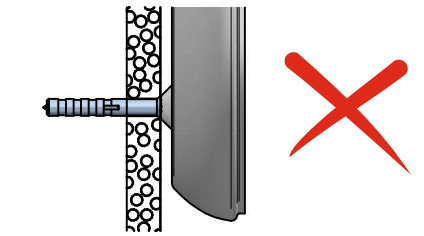

1

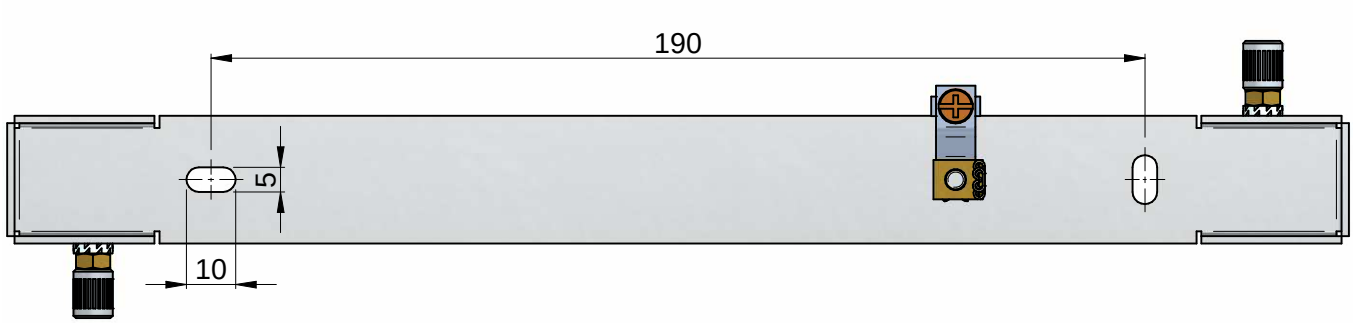

2

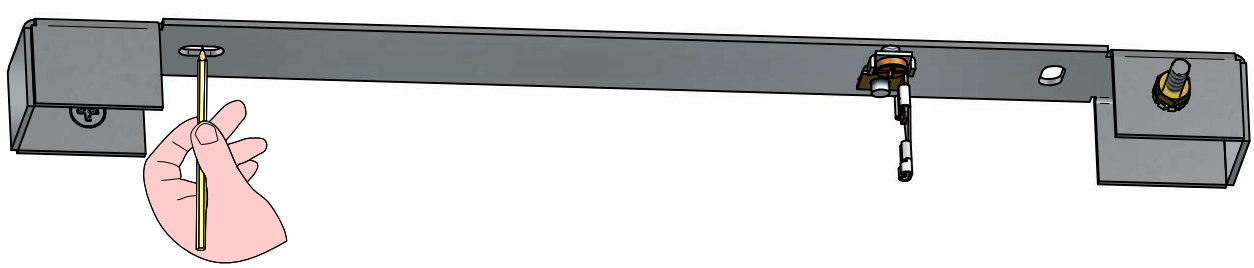

3

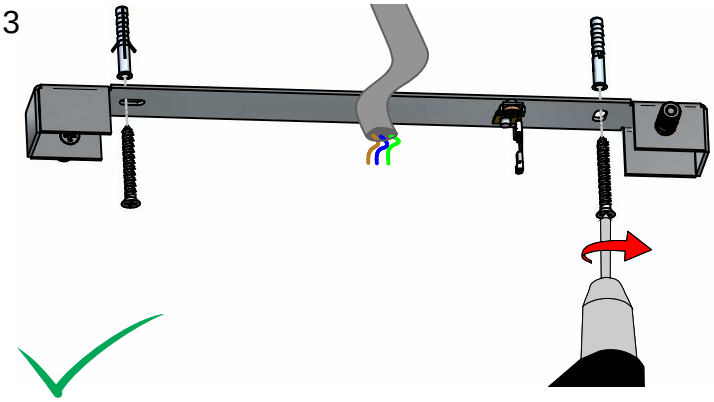

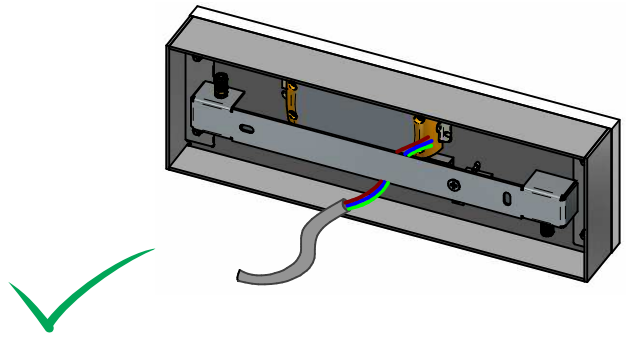

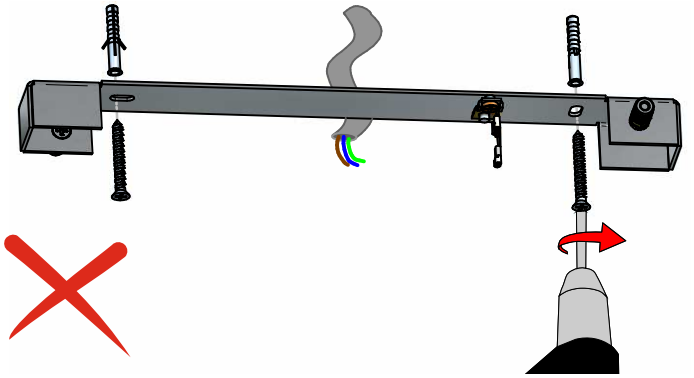

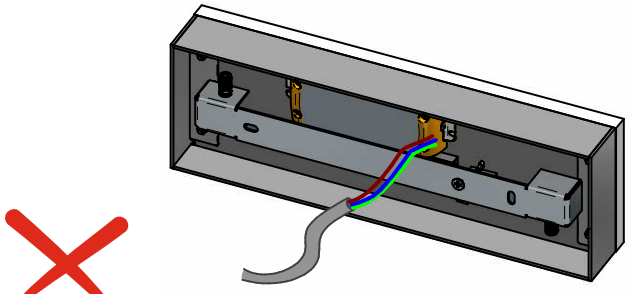

4

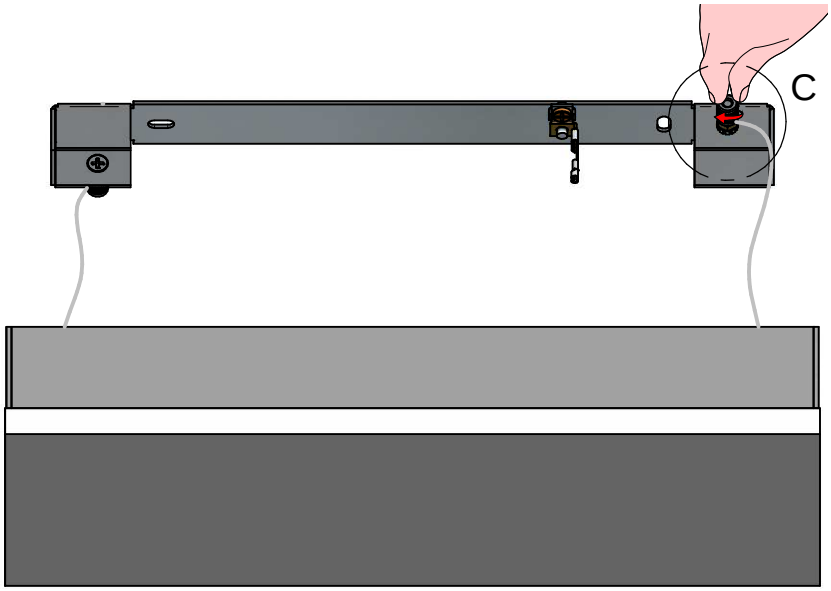

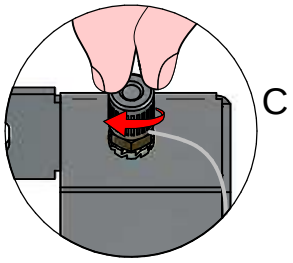

5

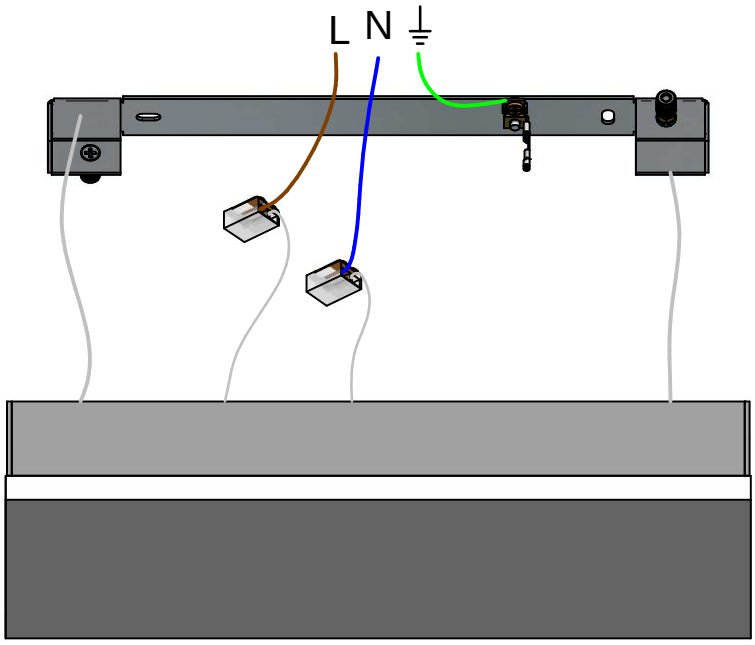

6

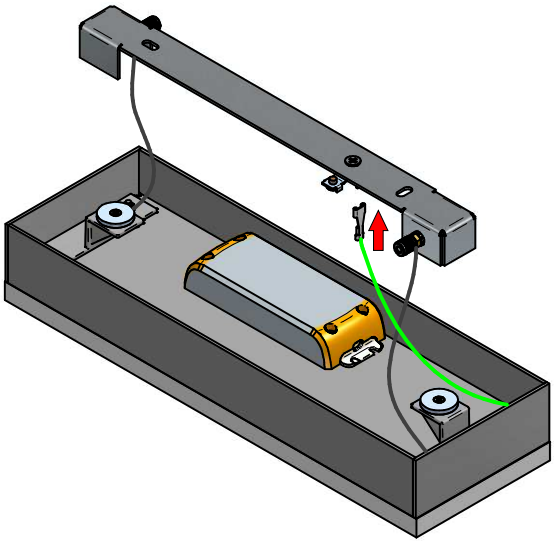

7

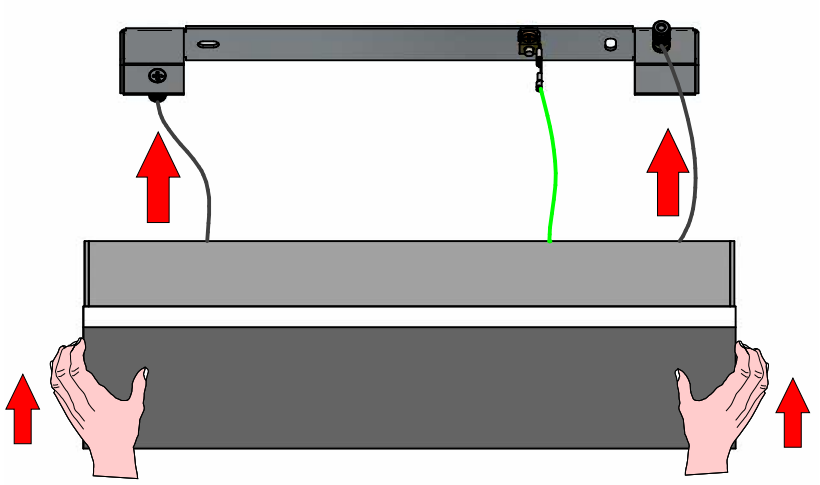

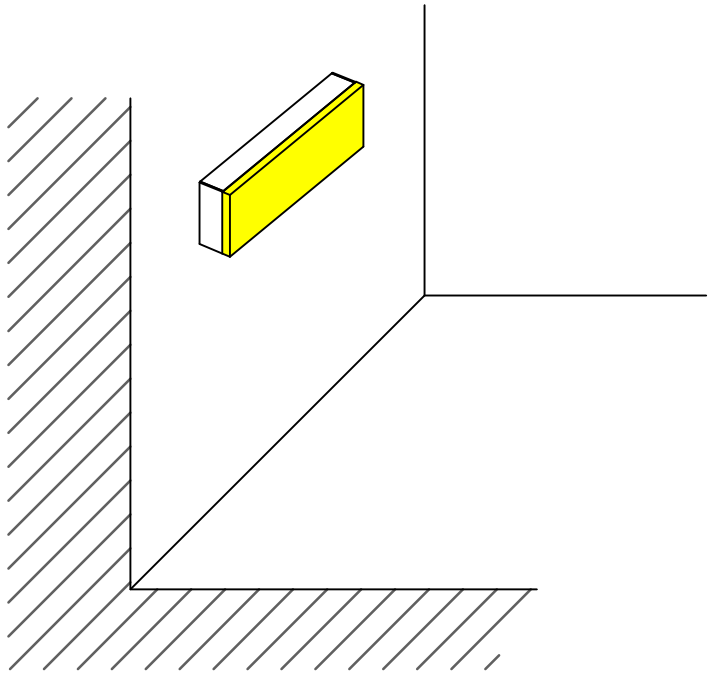

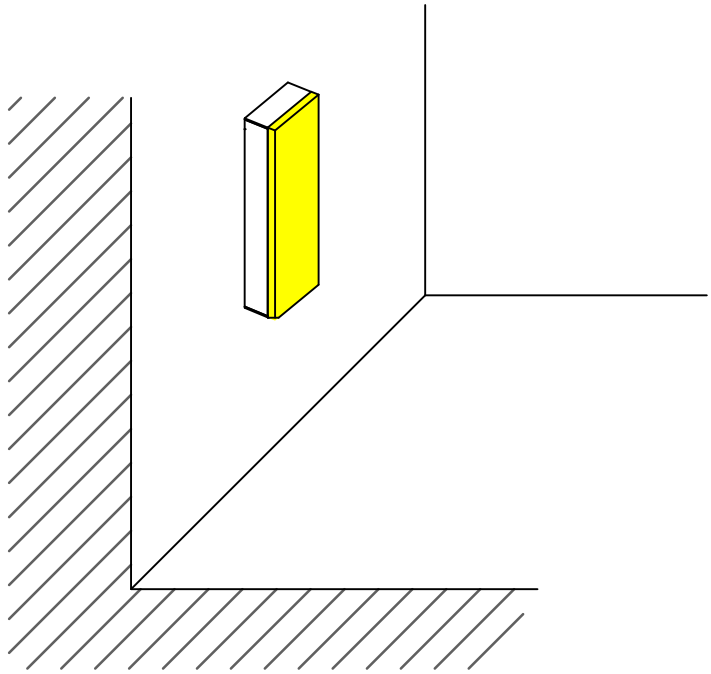

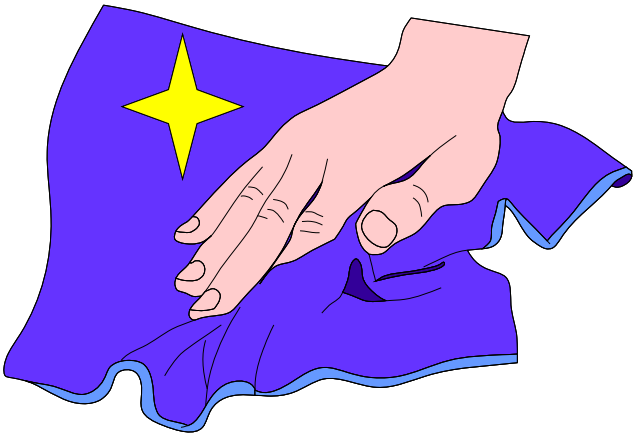



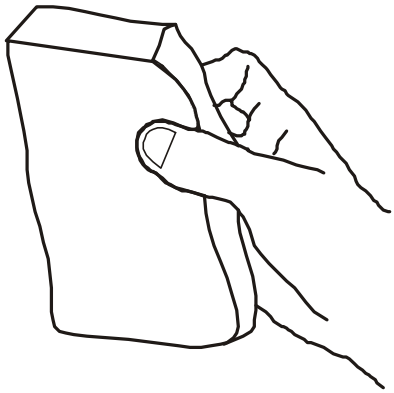

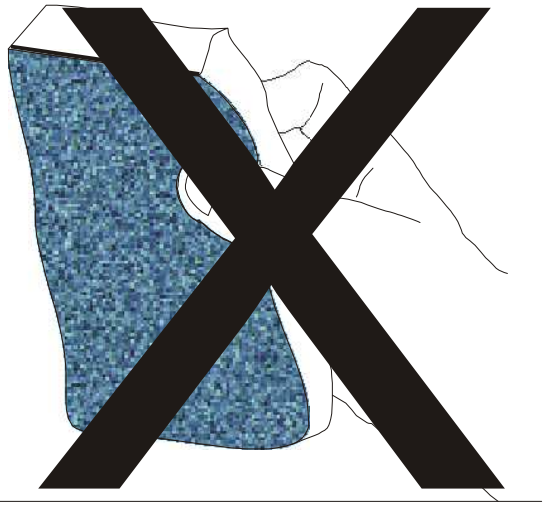



9137
IGLOO
rev:00

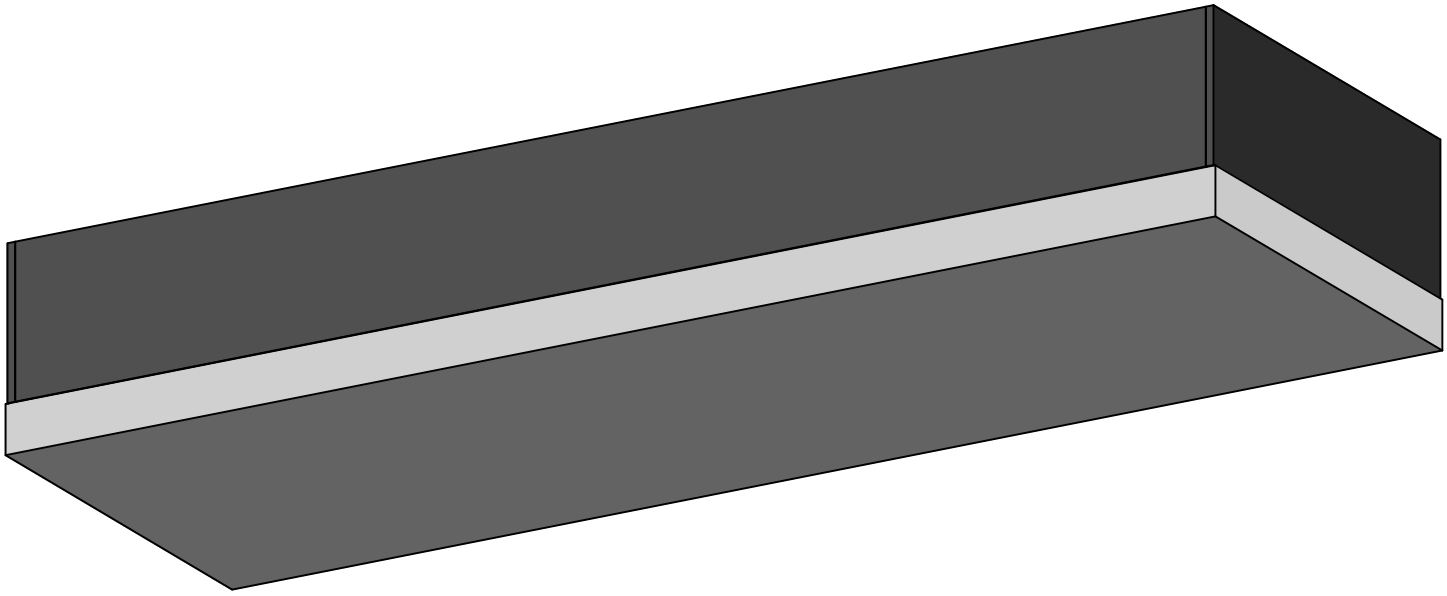

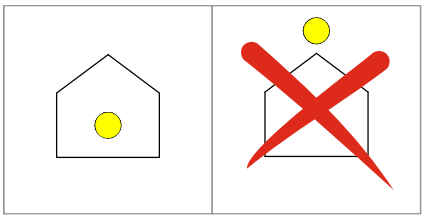

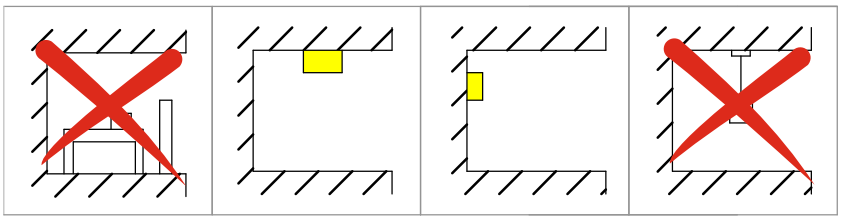

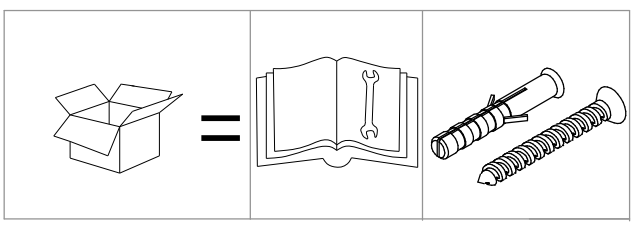

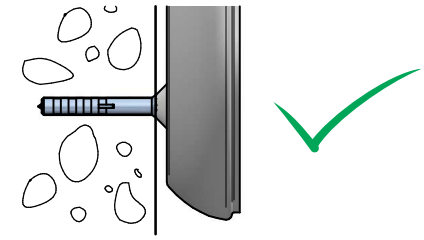

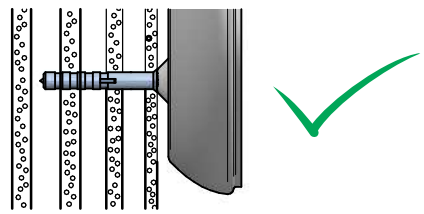

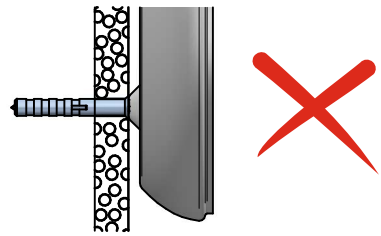

1

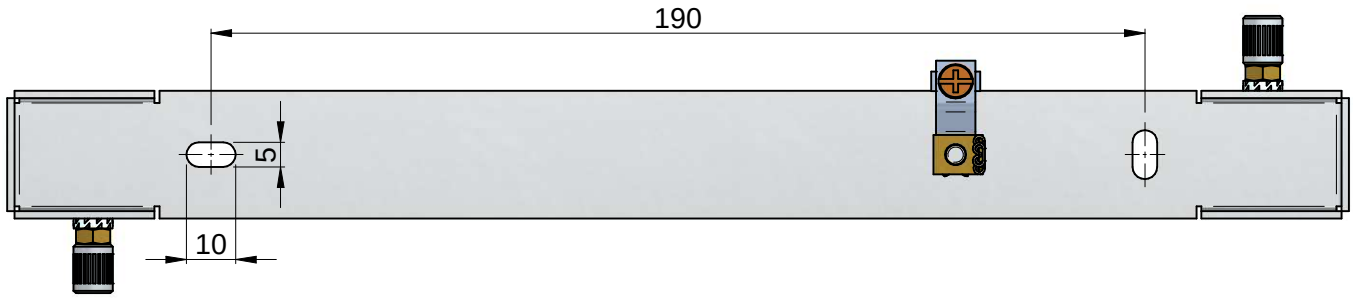

2

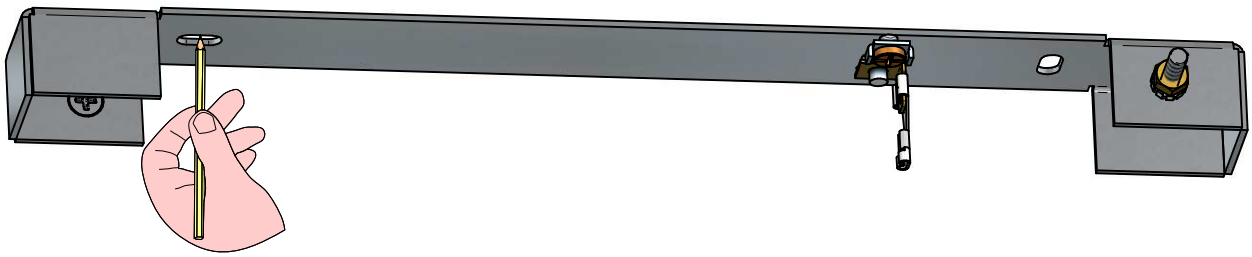

3

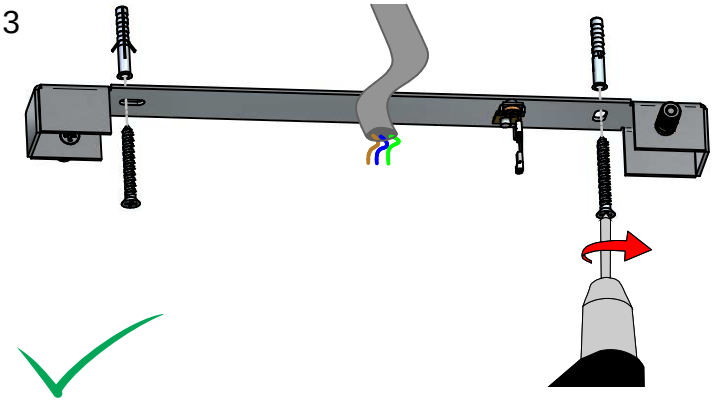

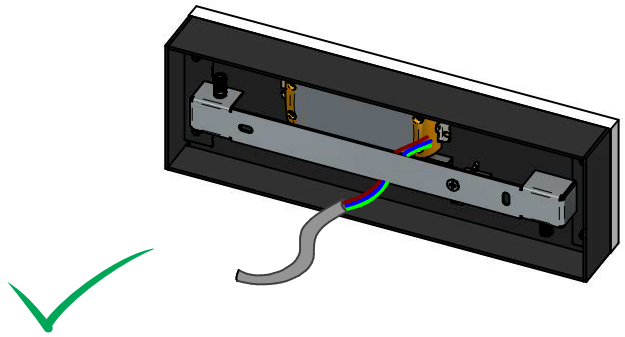

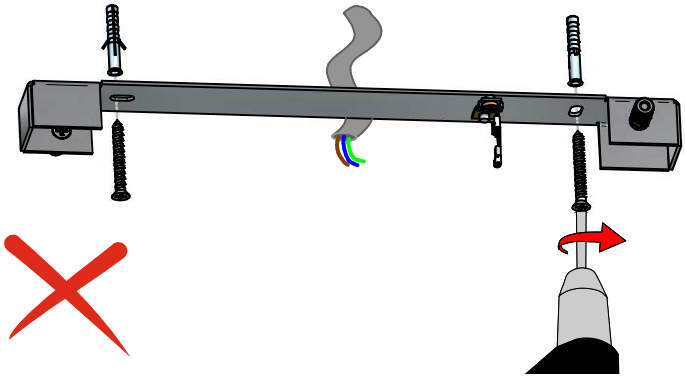

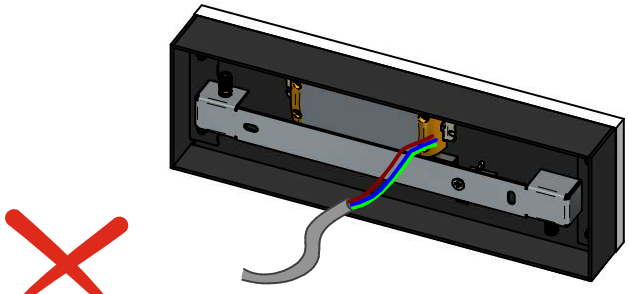

4

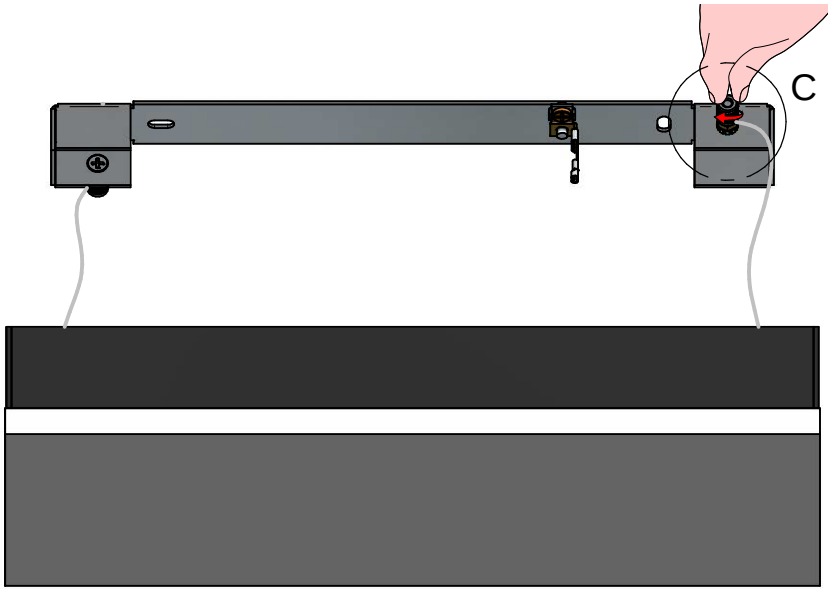

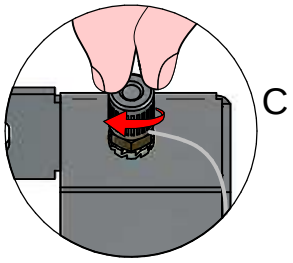

5

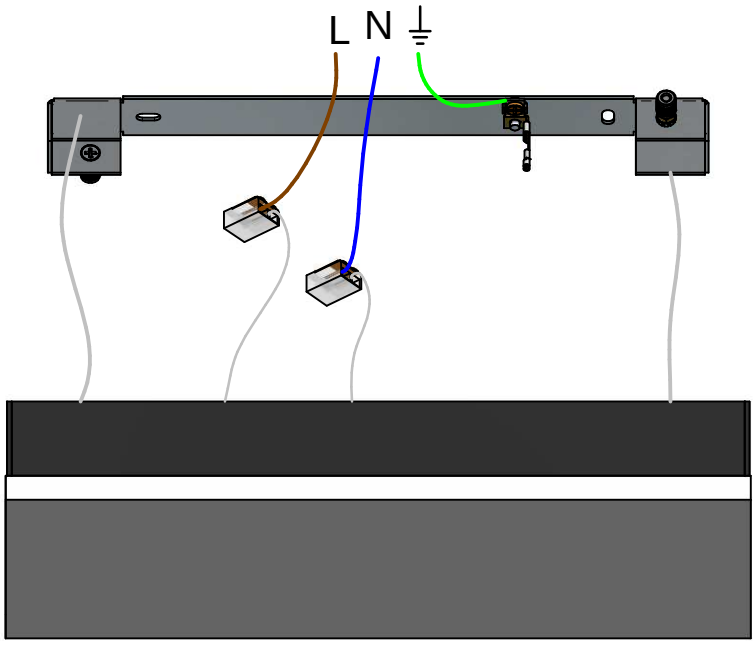

6

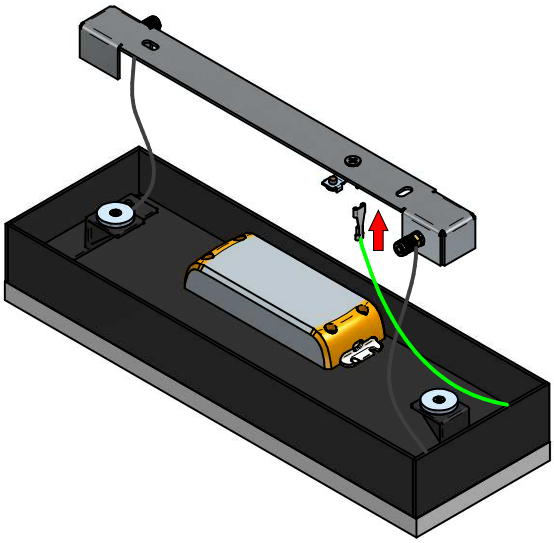

7

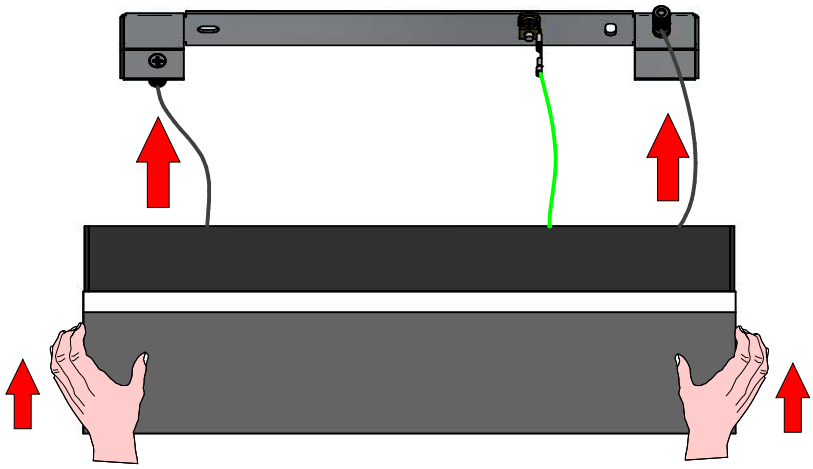

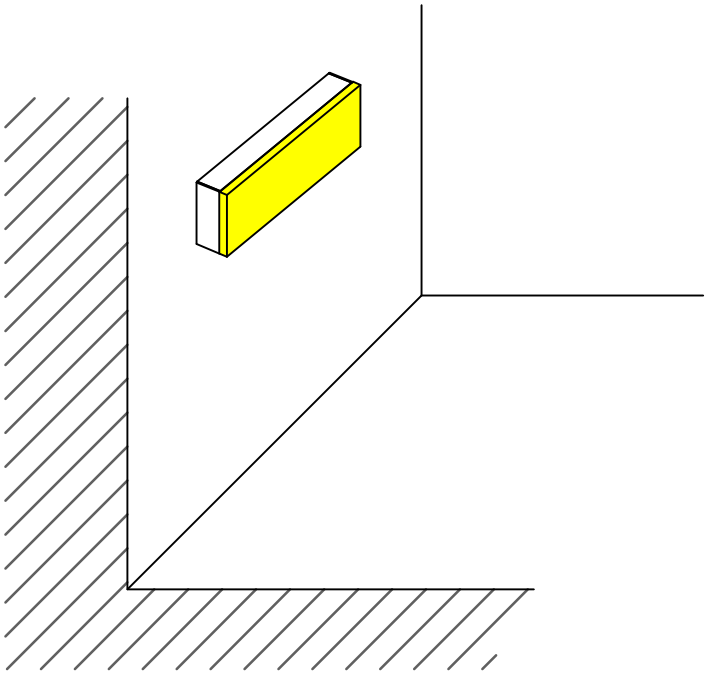

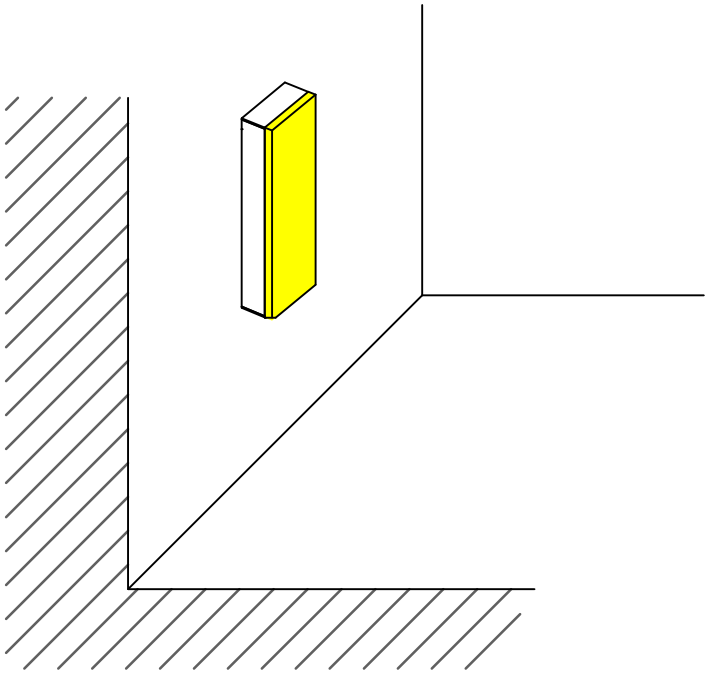

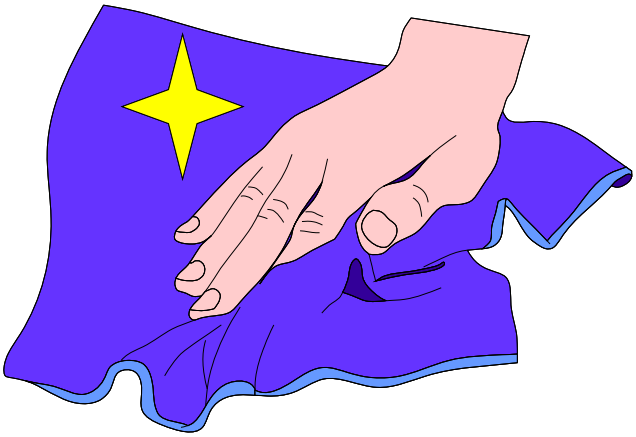



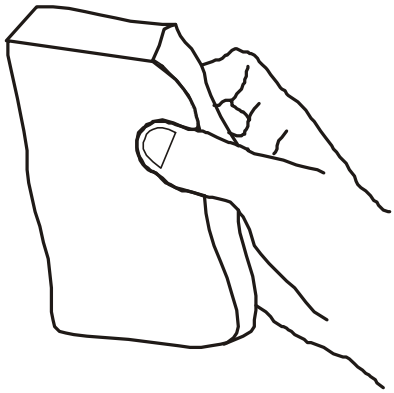

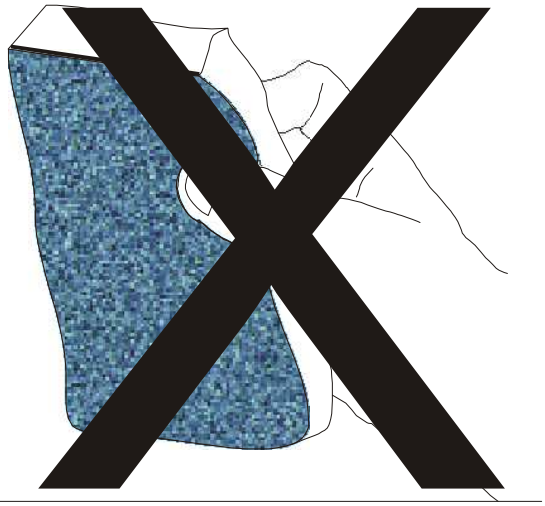



9139
IGLOO
rev:00

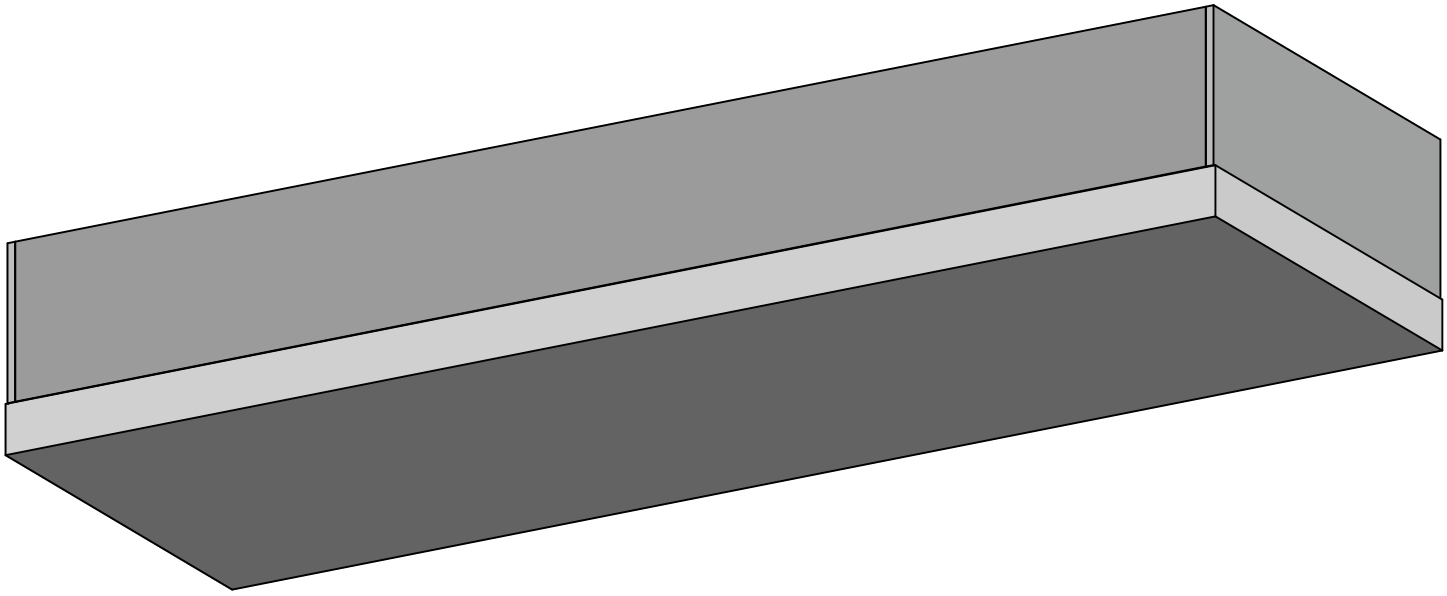

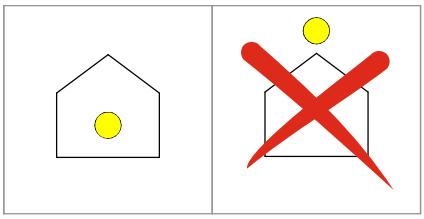

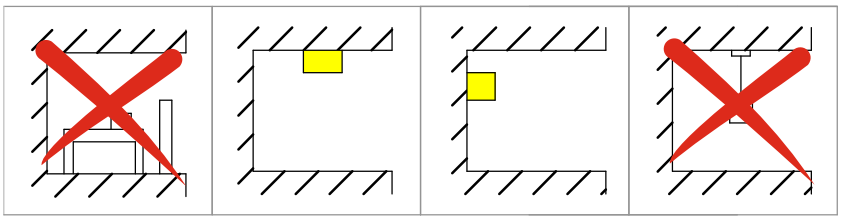

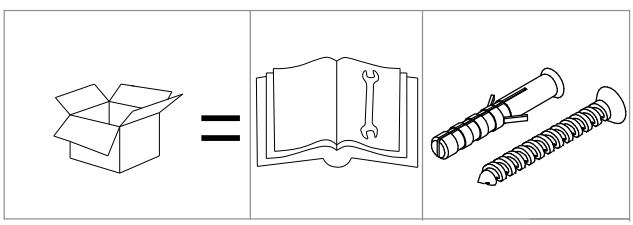

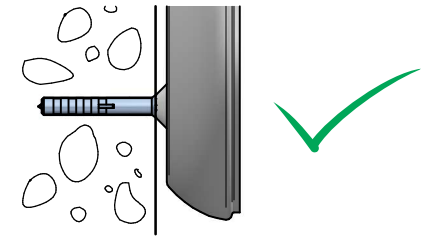

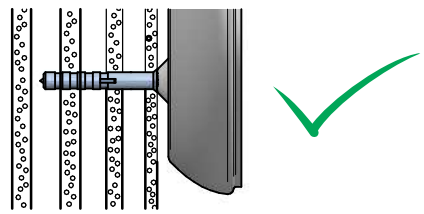

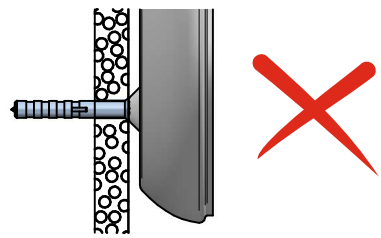

1

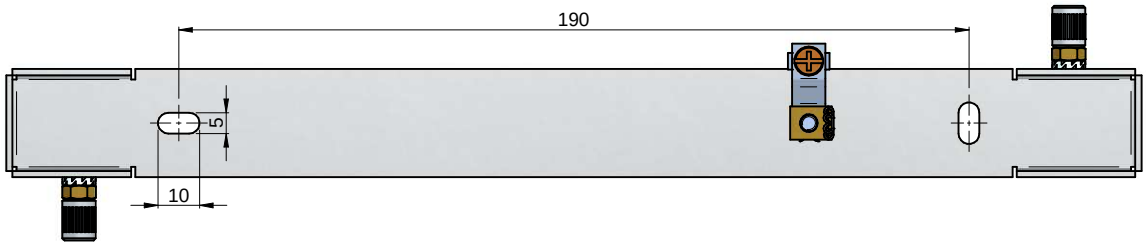

2



3

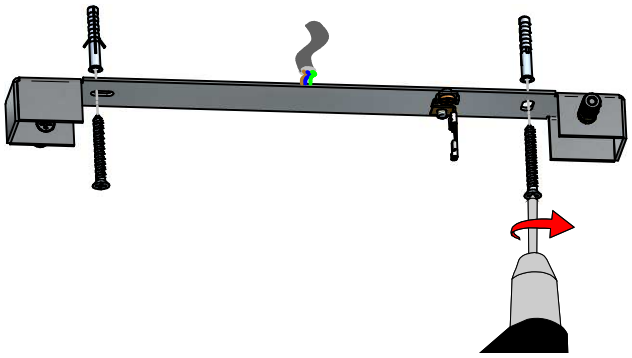

4

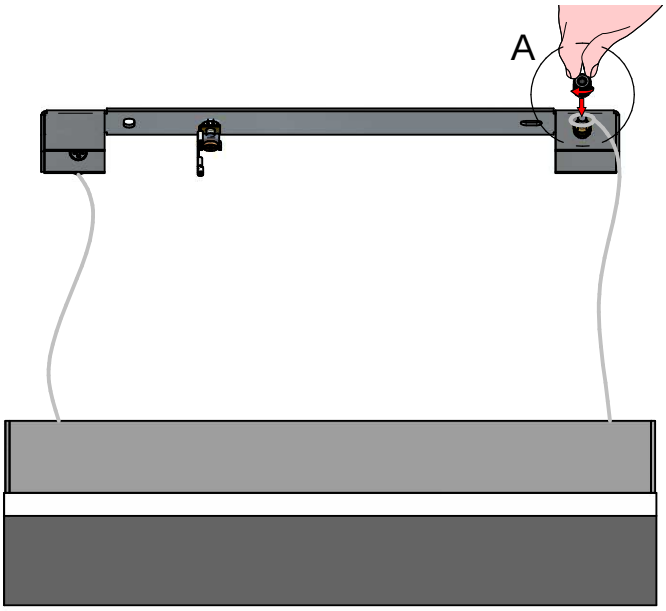

5

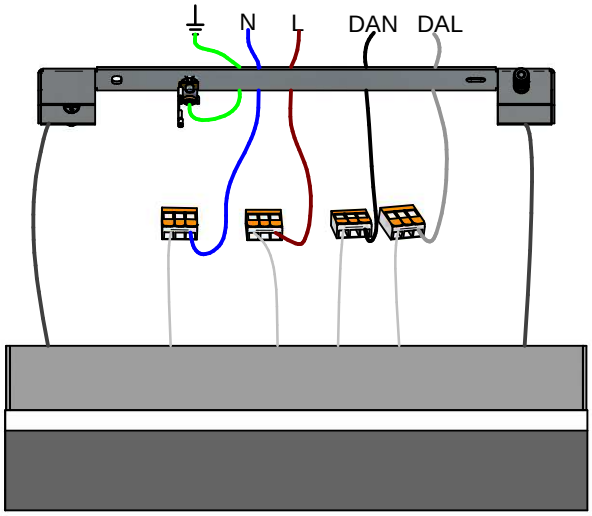

PUSH-DIM

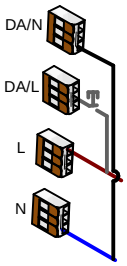

ON/OFF

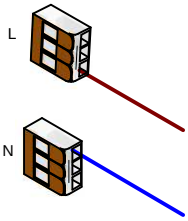

6

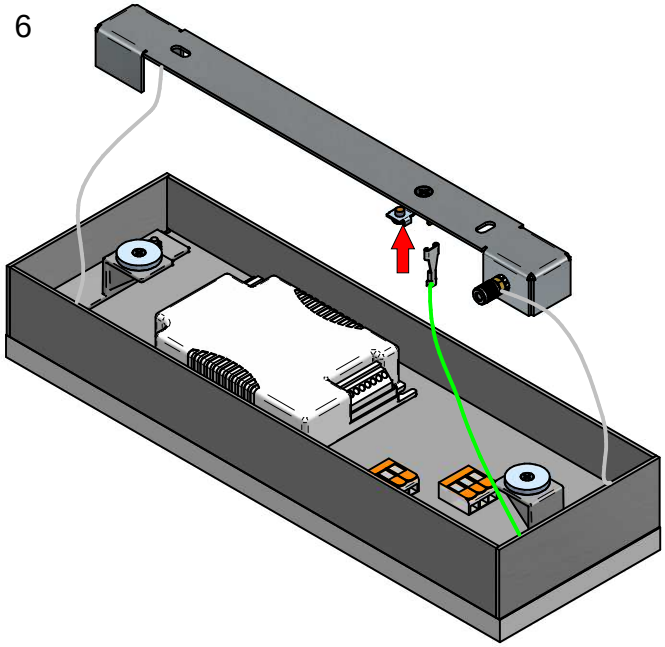

7

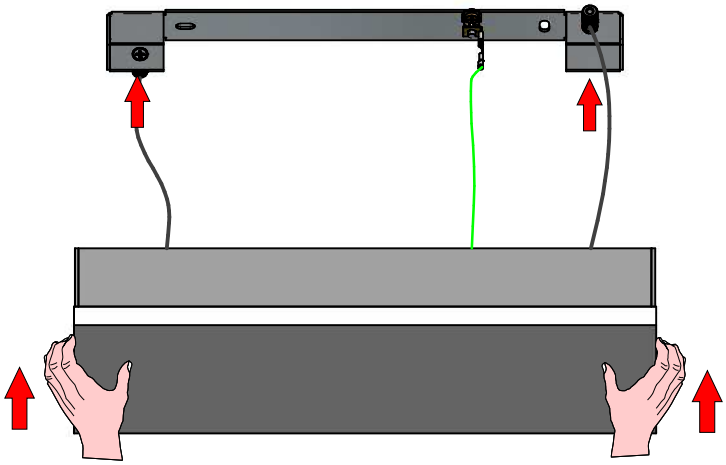

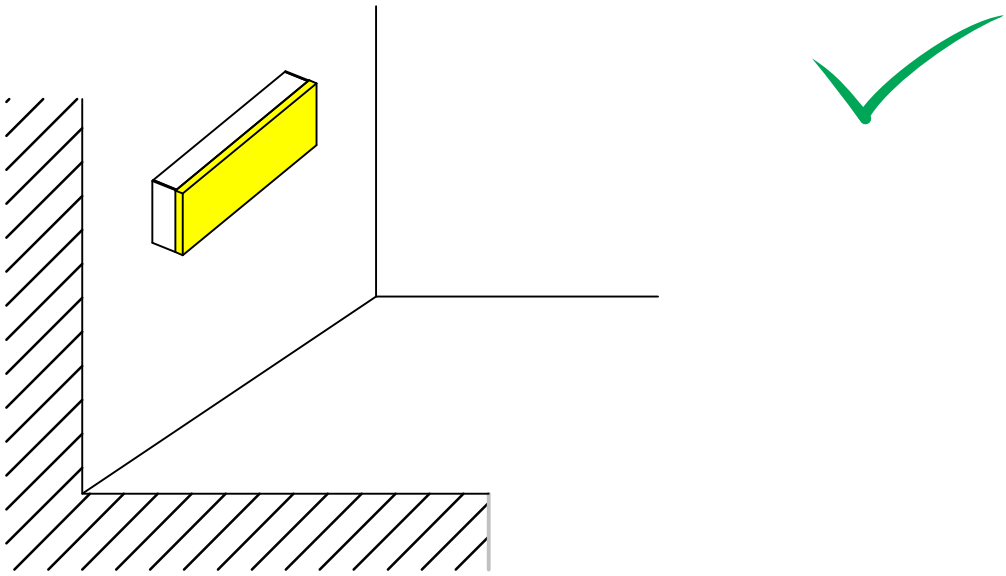

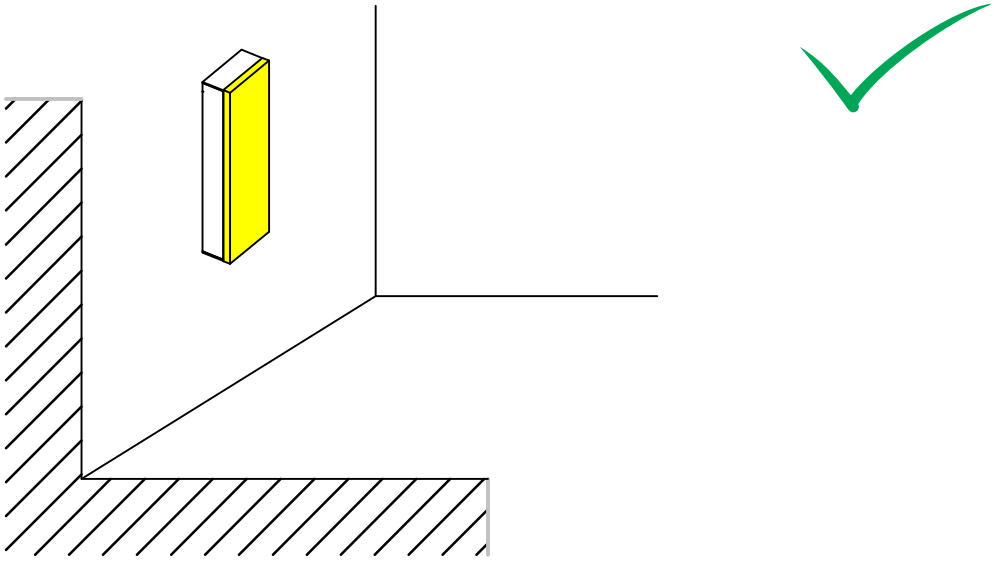

KIT0079 - CASAMBI DALI

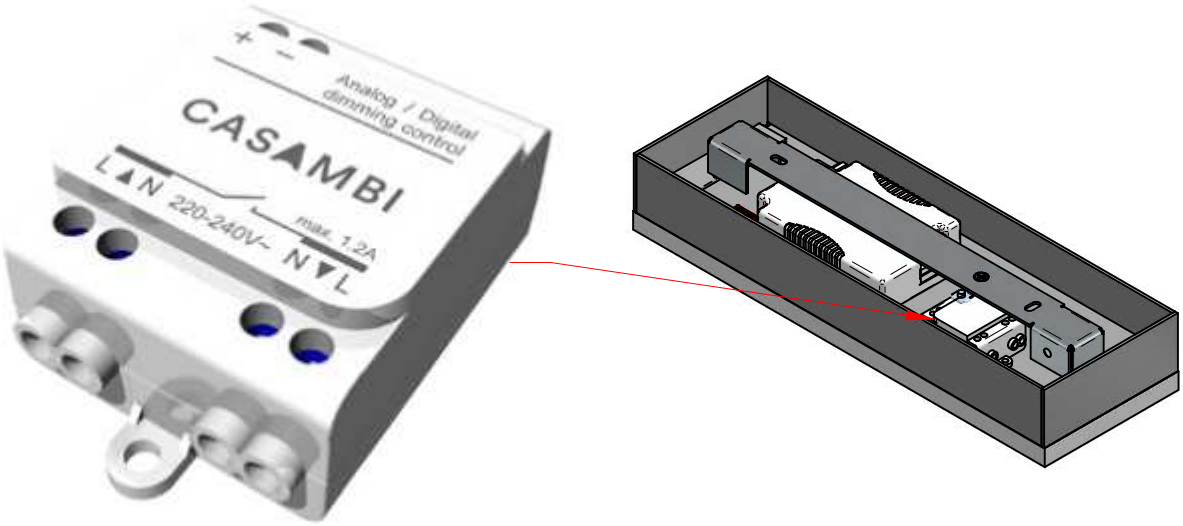

DALI / 1-10V

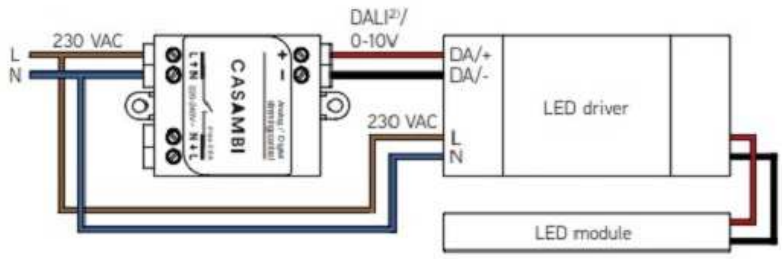



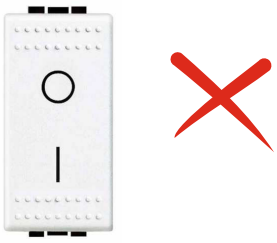

DALI / 1-10V

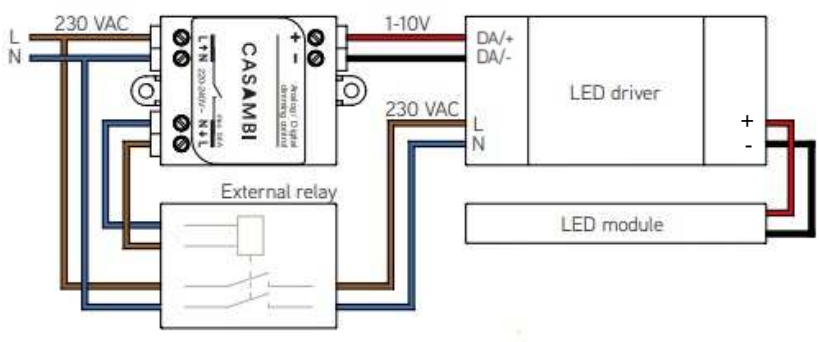



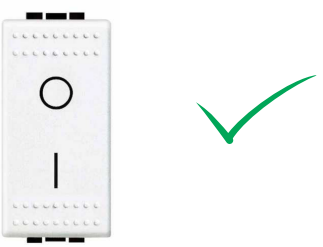

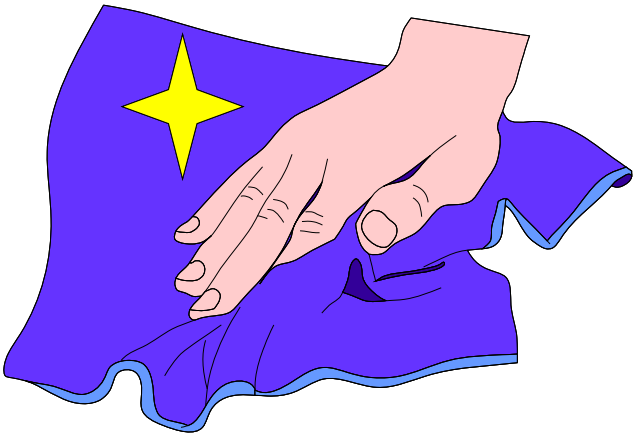



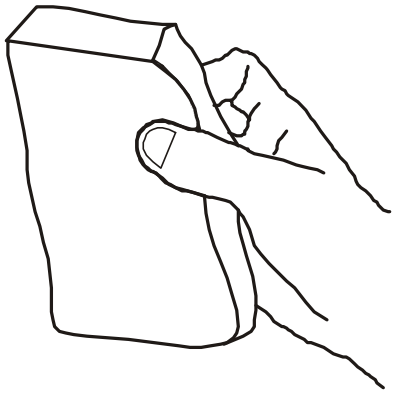

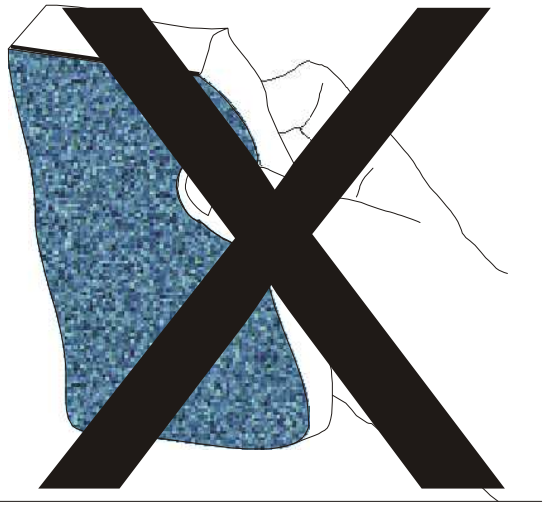



9138
IGLOO
rev:00

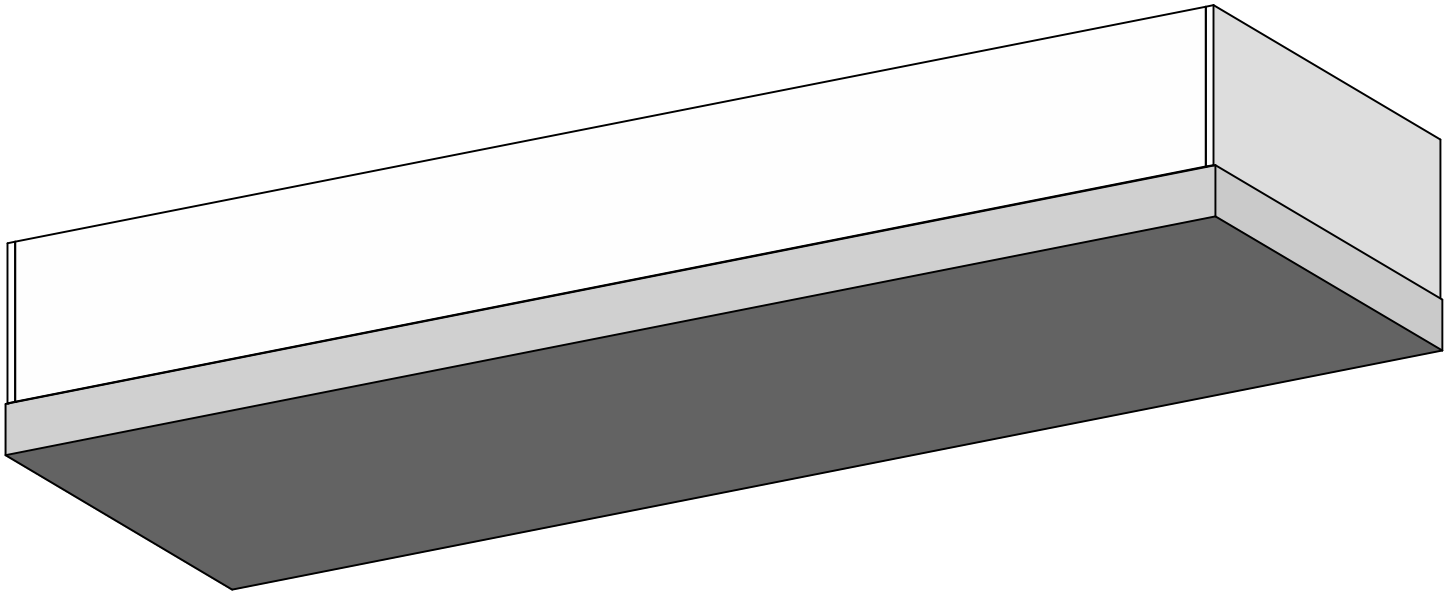

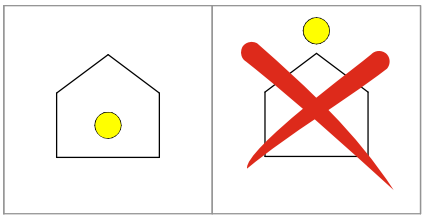

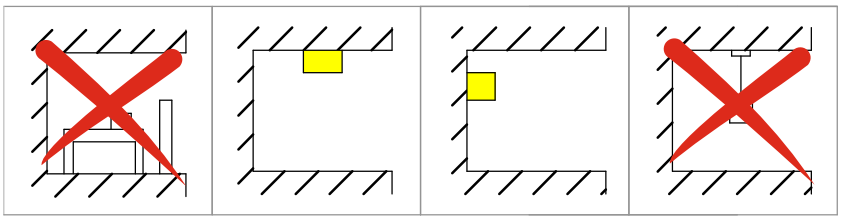

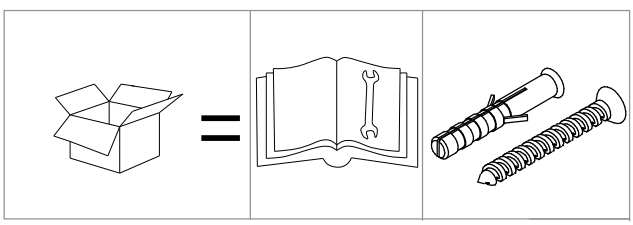

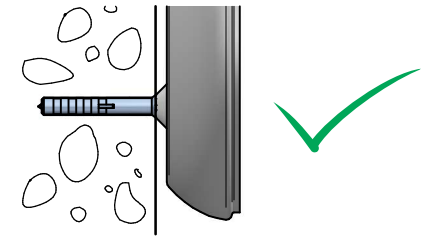

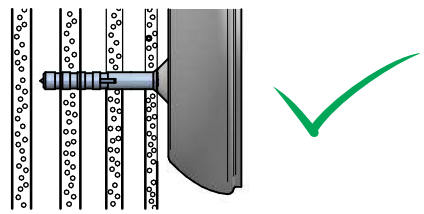

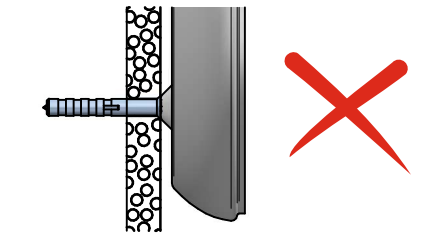

1

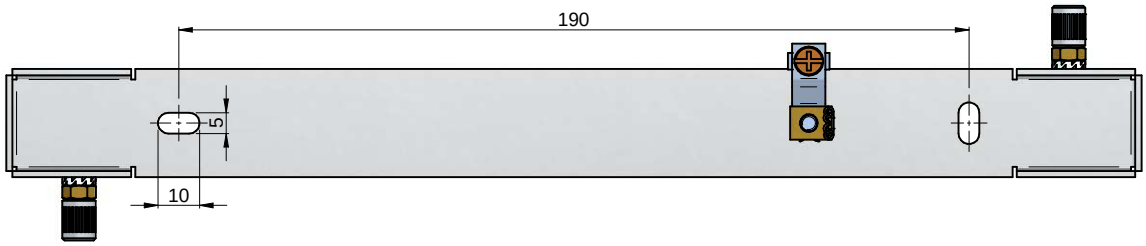

2



3

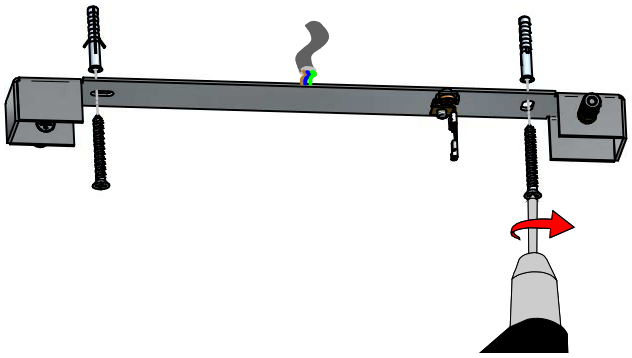

4

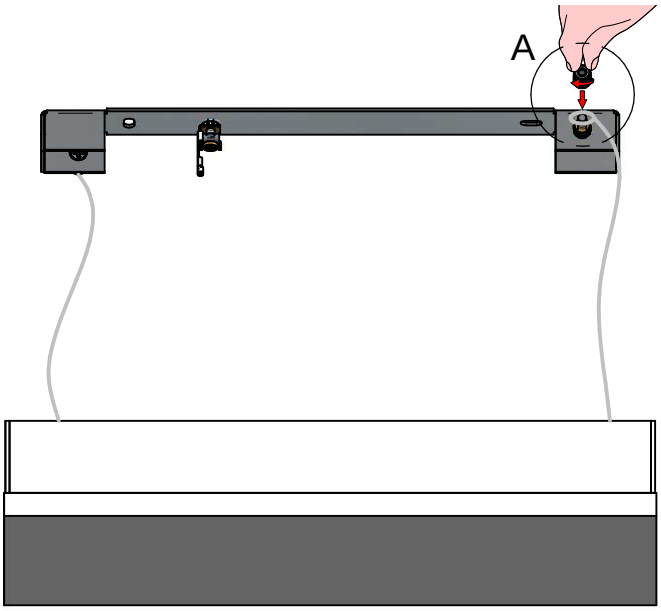

5

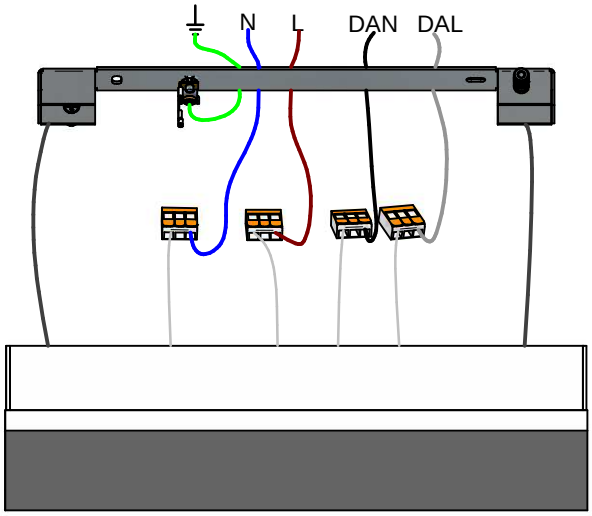

PUSH-DIM

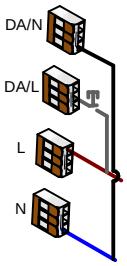

ON/OFF

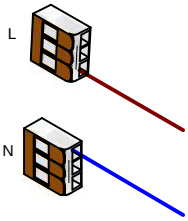

6

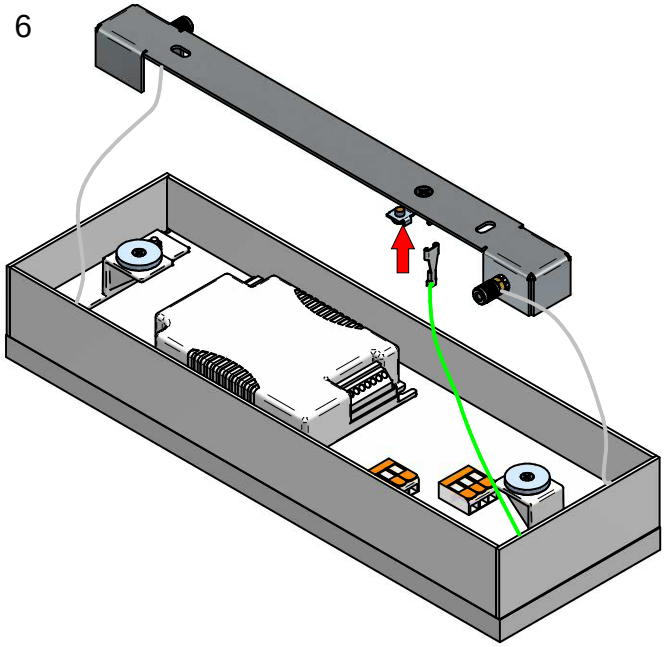

7

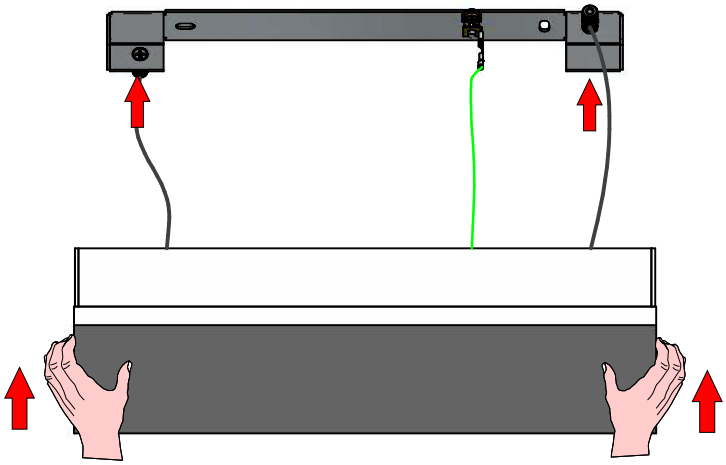

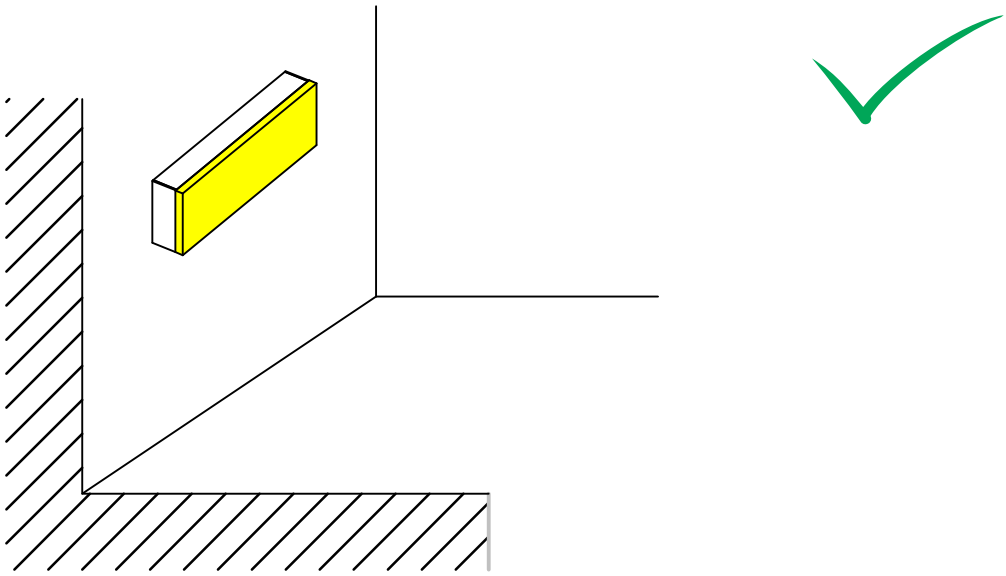

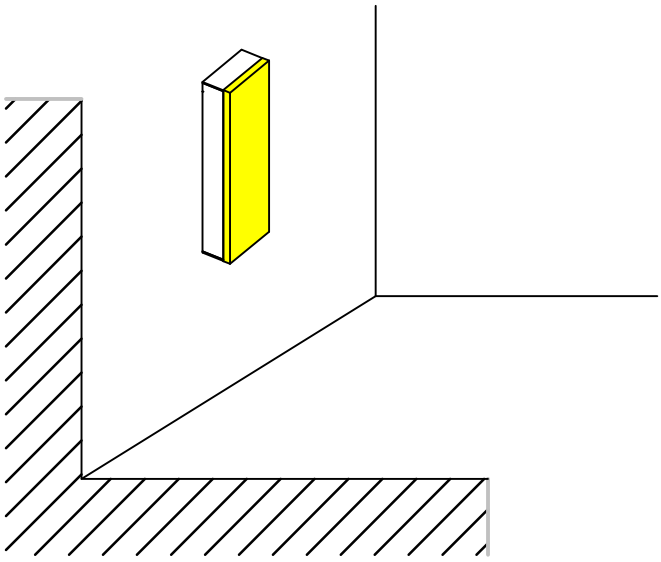

KIT0079 - CASAMBI DALI

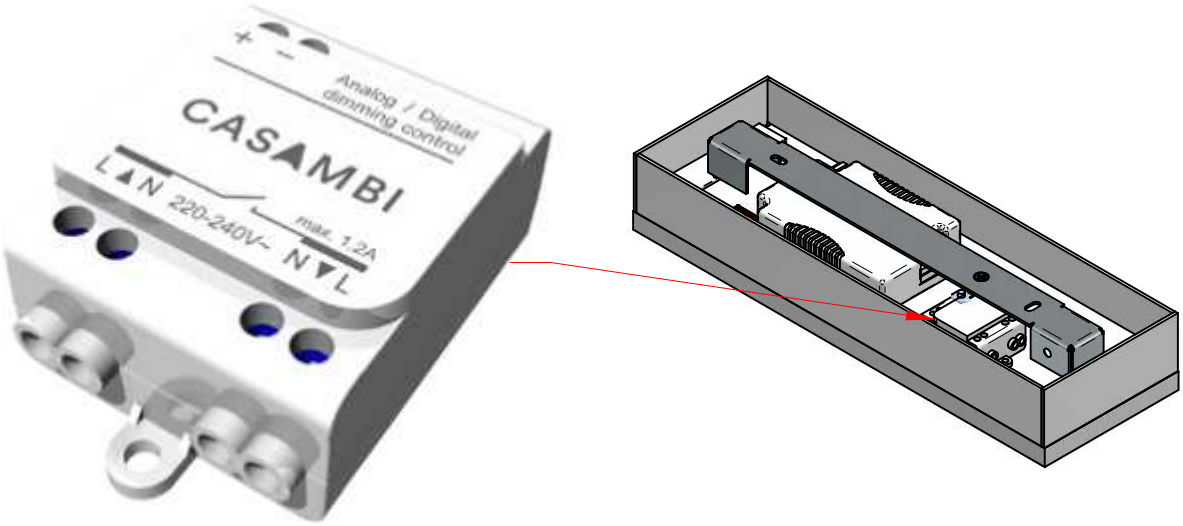

DALI / 1-10V

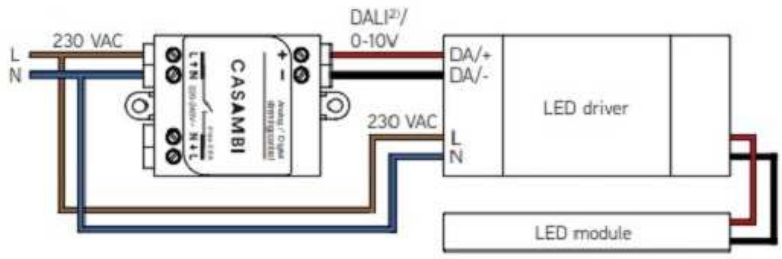



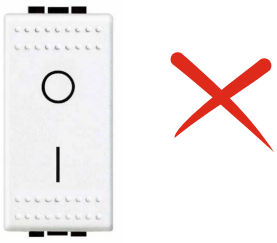

DALI / 1-10V

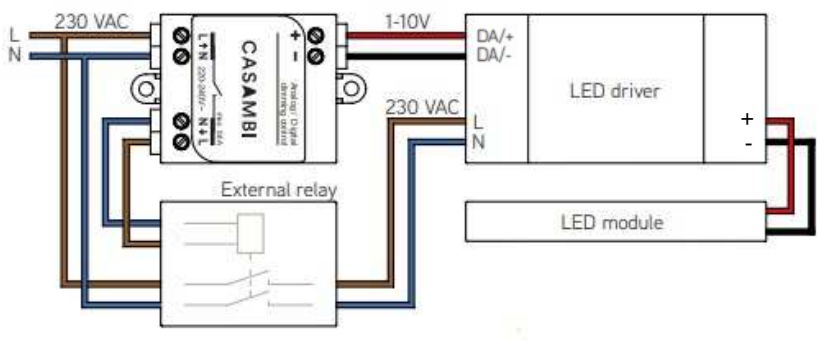



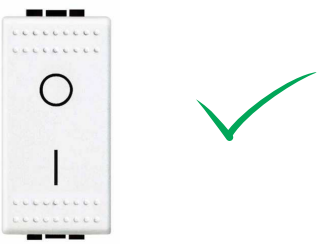

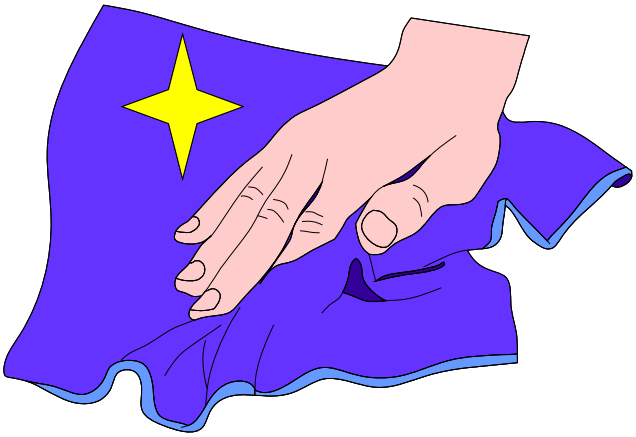



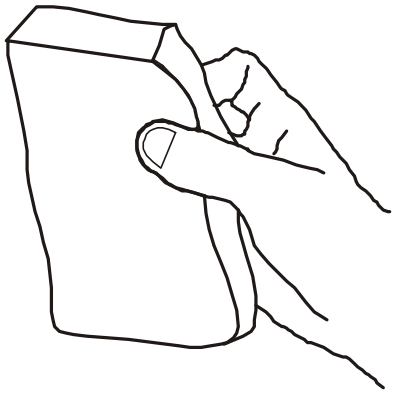

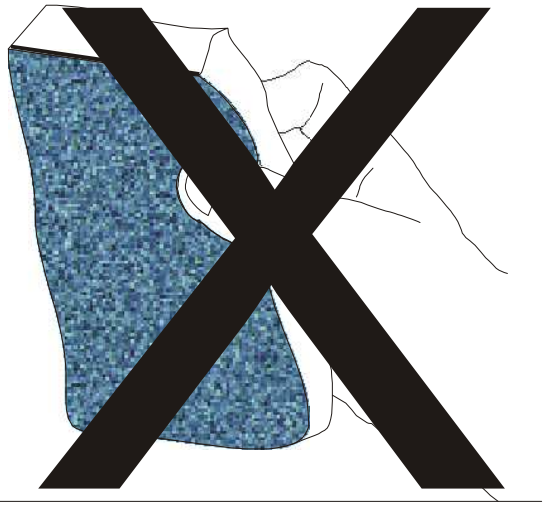



9140
IGLOO
rev:00

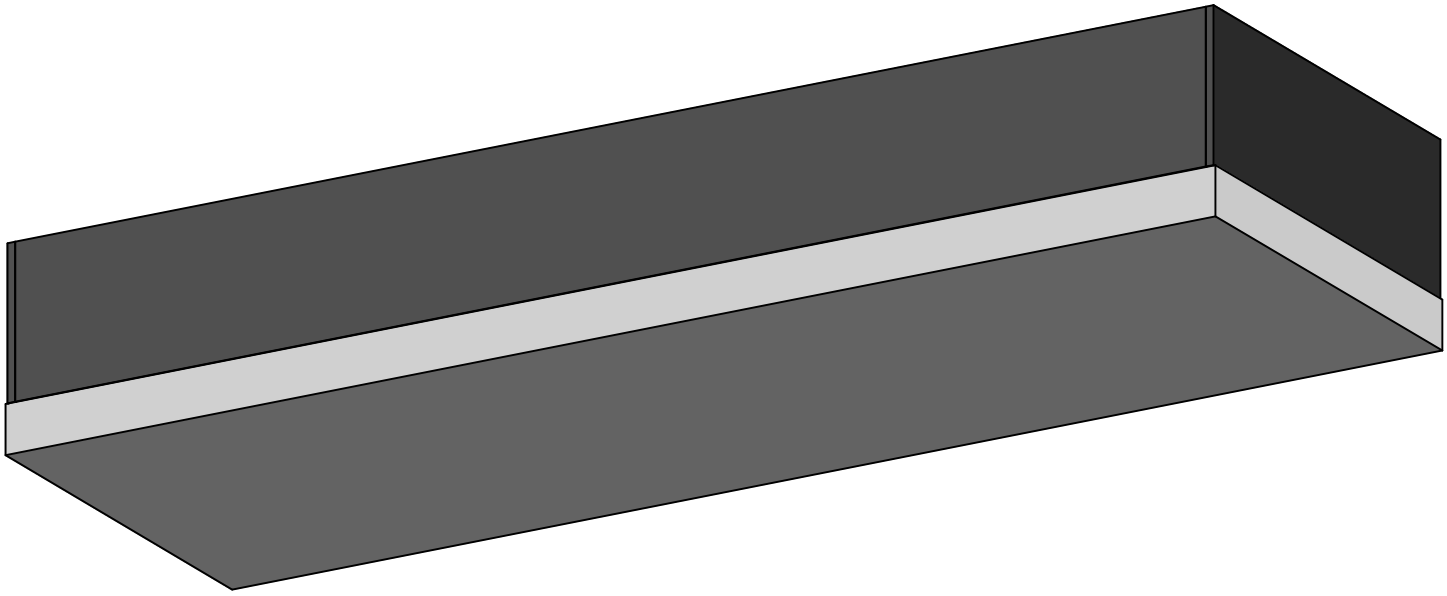

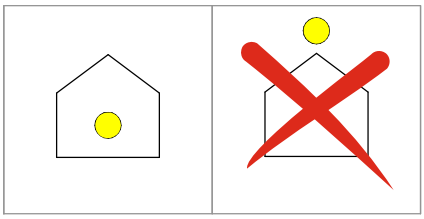

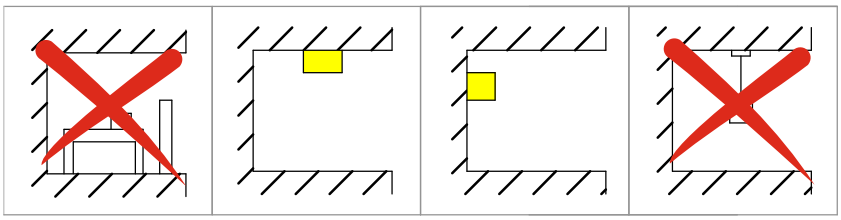

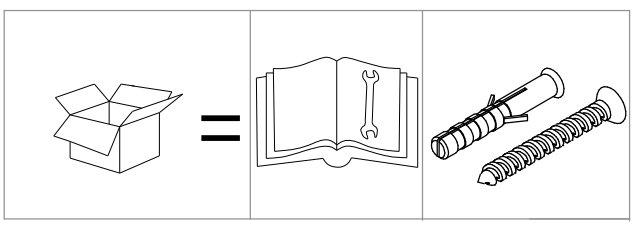

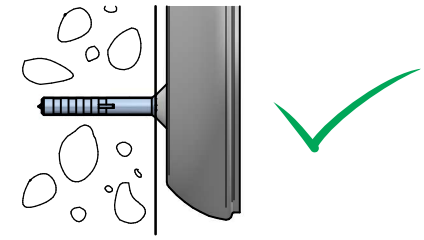

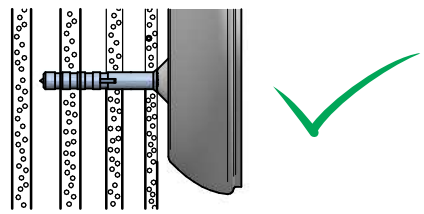

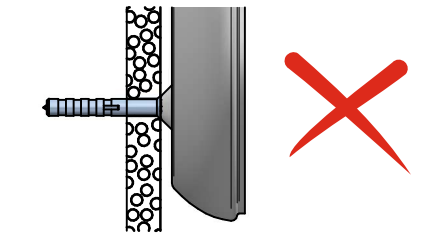

Decorative

1

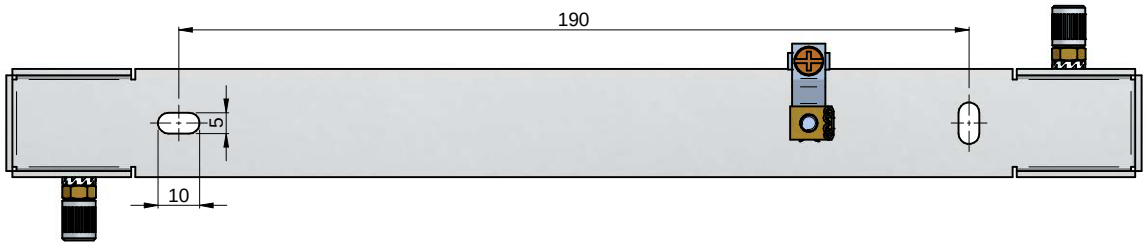

2



3

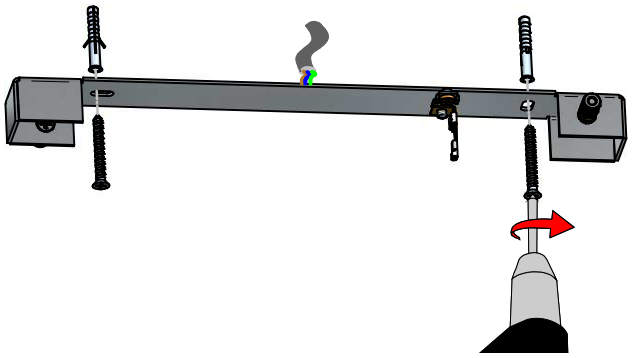

4

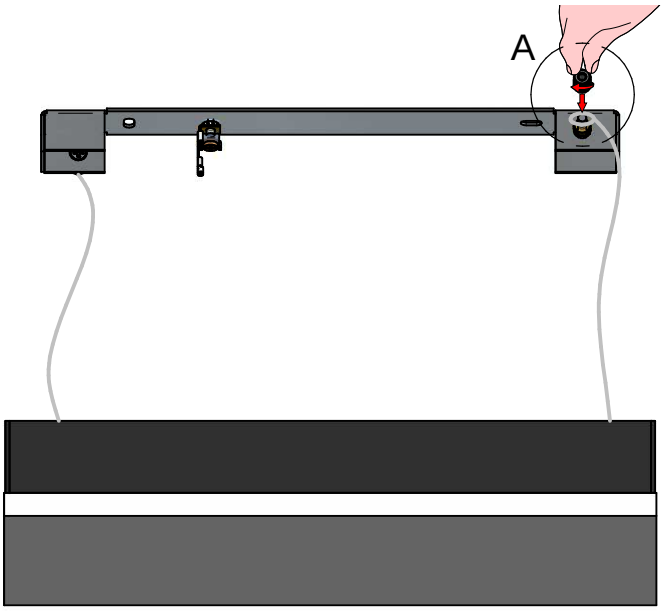

5

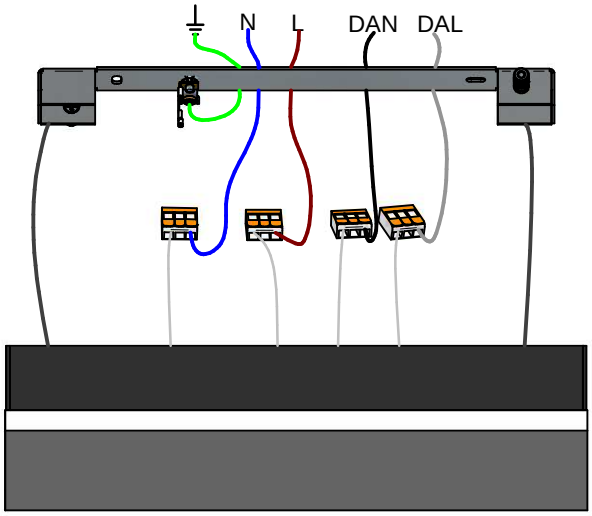

PUSH-DIM

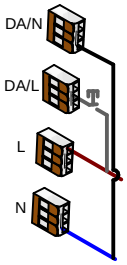

ON/OFF

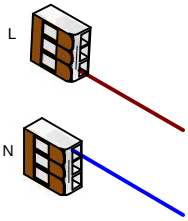

6

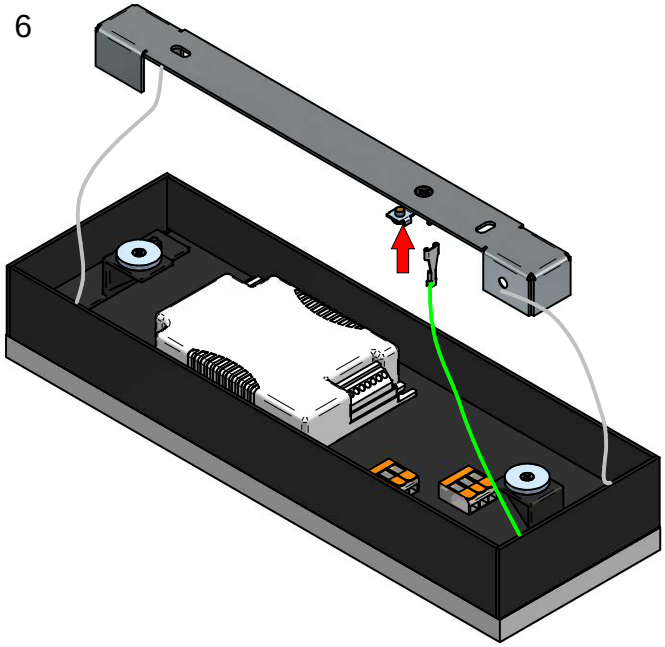

7

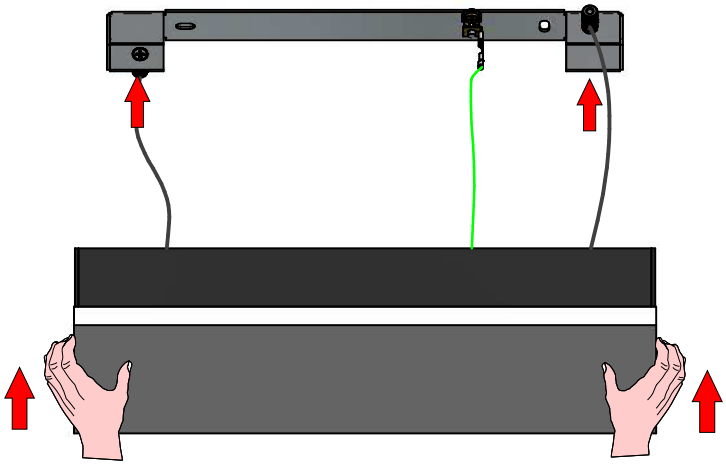

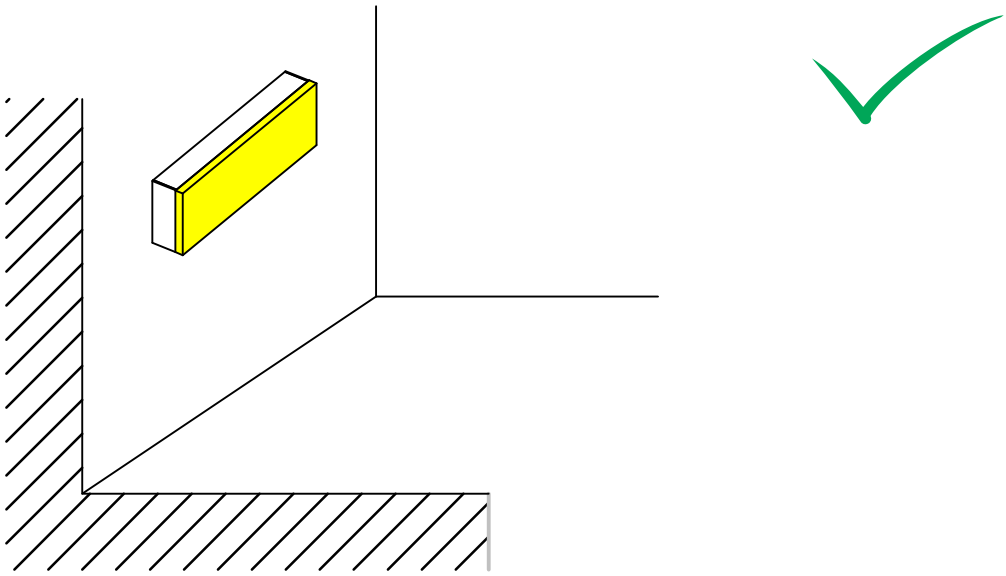

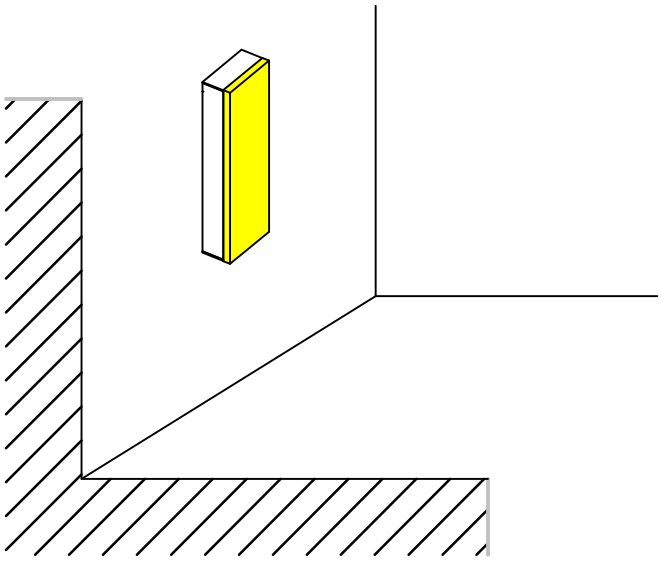

KIT0079 - CASAMBI DALI

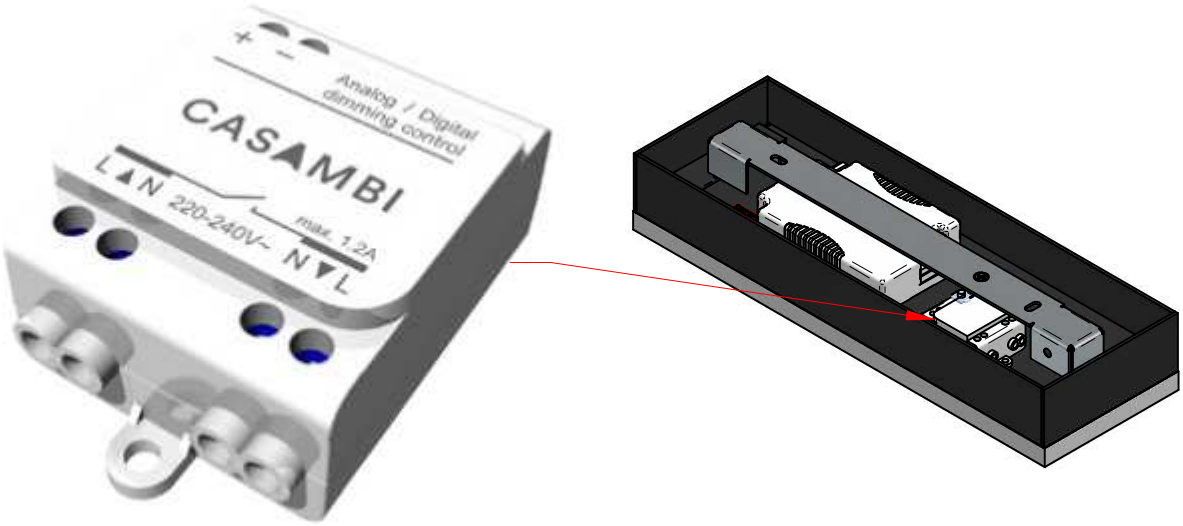

DALI / 1-10V

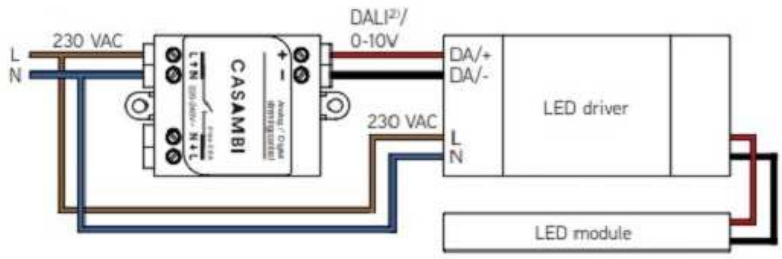



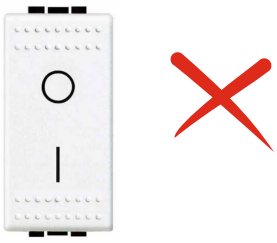

DALI / 1-10V

