PUCCINI SOSPENSIONE
rev:0

linea light

Decorative

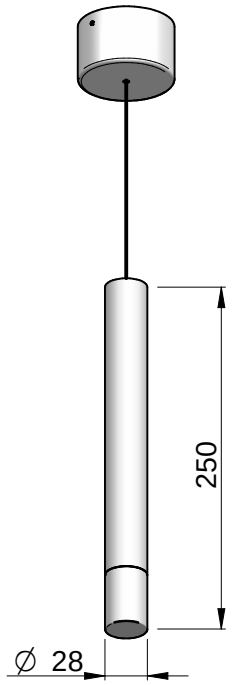

CA140AWHMDI	White	2700K
CA140AWHWDI	White	3000K
CA140ABBMDI	Black	2700K
CA140ABBWDI	Black	3000K
CA140ACHMDI	Chrome	2700K
CA140ACHWDI	Chrome	3000K
CA140AHGMDI	Brushed Gold	2700K
CA140AHGWDI	Brushed Gold	3000K

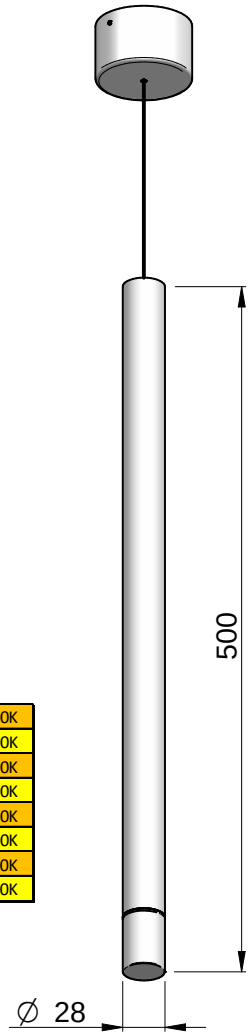

CA141AWHMDI	White	2700K
CA141AWHWDI	White	3000K
CA141ABBMDI	Black	2700K
CA141ABBWDI	Black	3000K
CA141ACHMDI	Chrome	2700K
CA141ACHWDI	Chrome	3000K
CA141AHGMDI	Brushed Gold	2700K
CA14AHGWDI	Brushed Gold	3000K

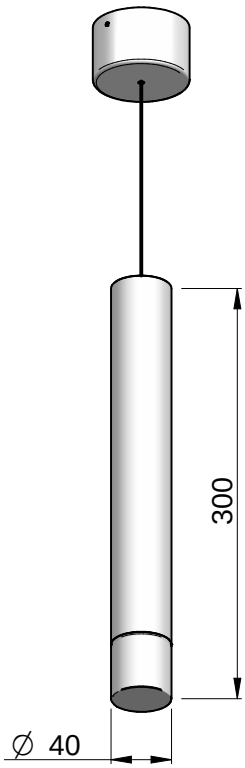

CA142AWHMDI	White	2700K
CA142AWHWDI	White	3000K
CA142ABBMDI	Black	2700K
CA142ABBWDI	Black	3000K
CA142ACHMDI	Chrome	2700K
CA142ACHWDI	Chrome	3000K
CA142AHGMDI	Brushed Gold	2700K
CA142AHGWDI	Brushed Gold	3000K

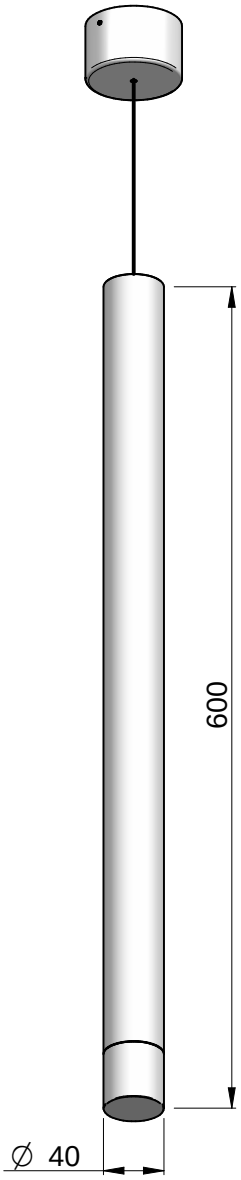

CA143AWHMDI	White	2700K
CA143AWHWDI	White	3000K
CA143ABBMDI	Black	2700K
CA143ABBWDI	Black	3000K
CA143ACHMDI	Chrome	2700K
CA143ACHWDI	Chrome	3000K
CA143AHGMDI	Brushed Gold	2700K
CA143AHGWDI	Brushed Gold	3000K

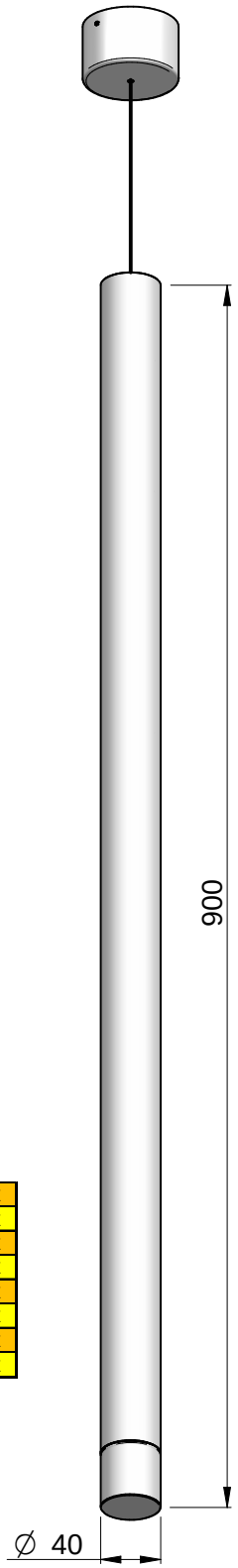

CA144AWHMDI	White	2700K
CA144AWHWDI	White	3000K
CA144ABBMDI	Black	2700K
CA144ABBWDI	Black	3000K
CA144ACHMDI	Chrome	2700K
CA144ACHWDI	Chrome	3000K
CA144AHGMDI	Brushed Gold	2700K
CA144AHGWDI	Brushed Gold	3000K

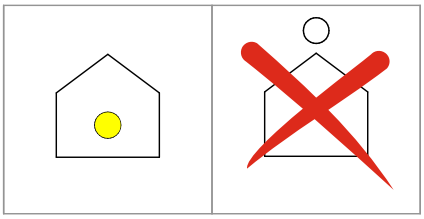

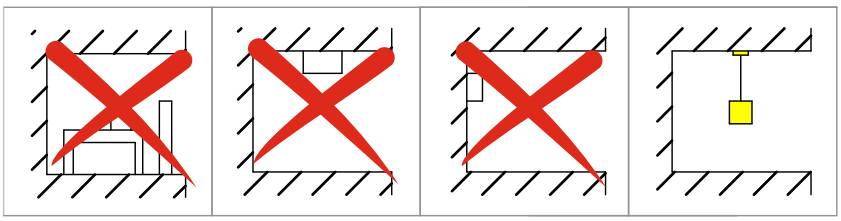

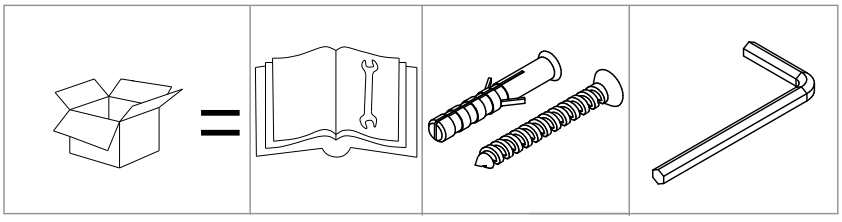

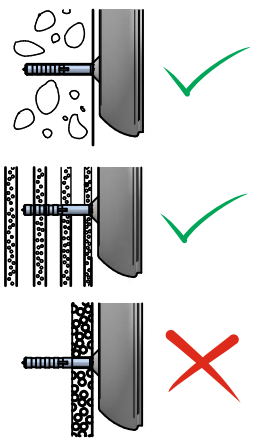

PUCCINI SOSPENSIONE
rev:0

1

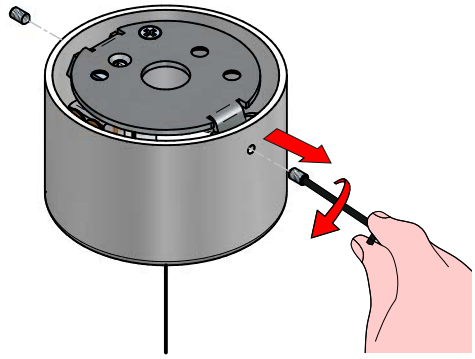

2

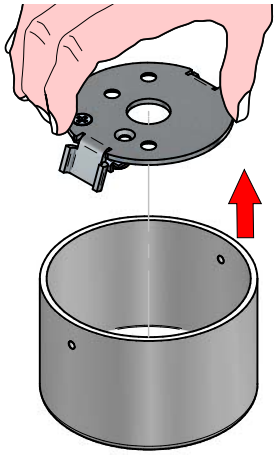

3

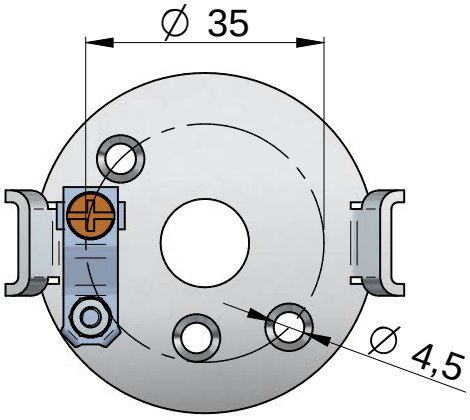

4

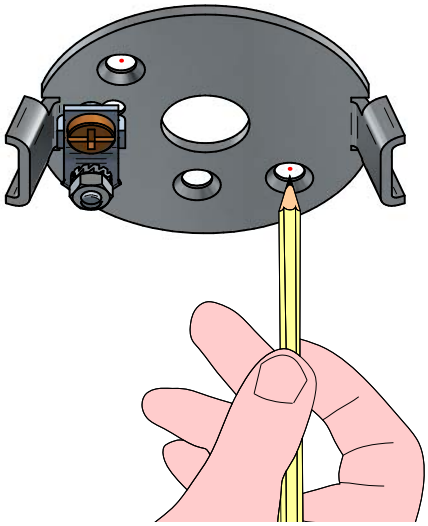

5

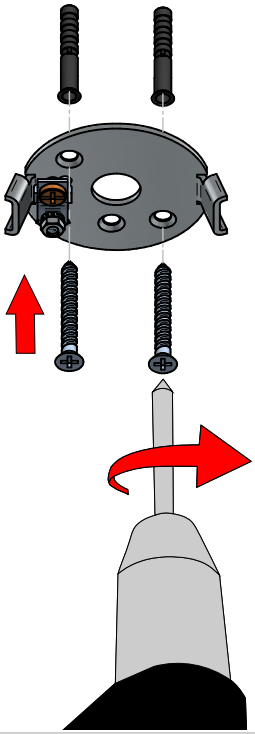

6

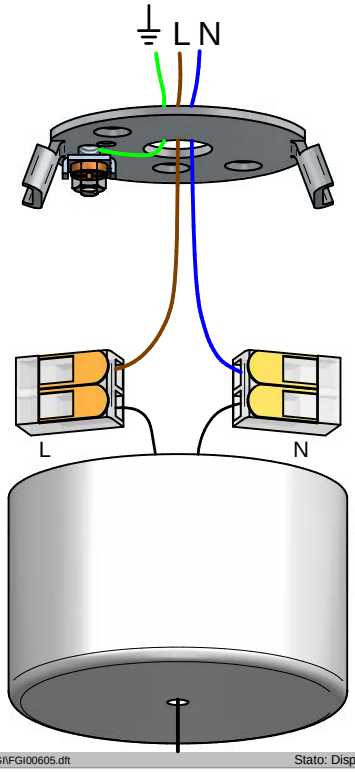

7

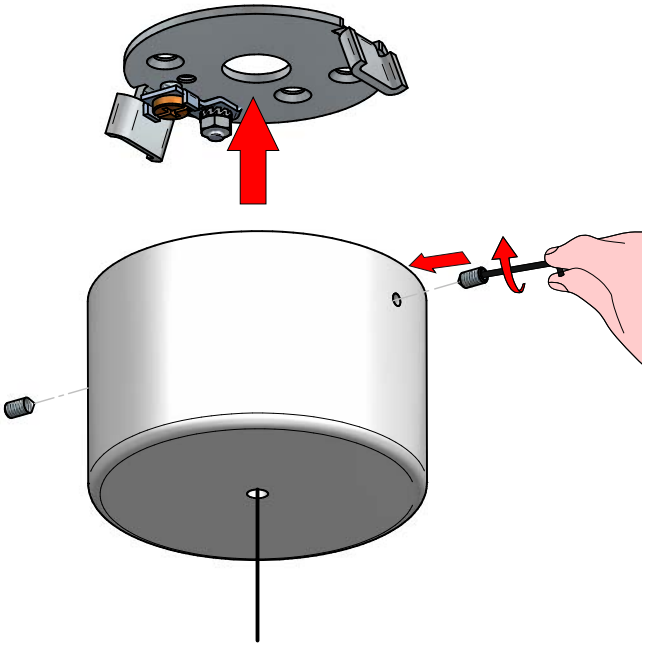

PUCCINI SOSPENSIONE
rev:0

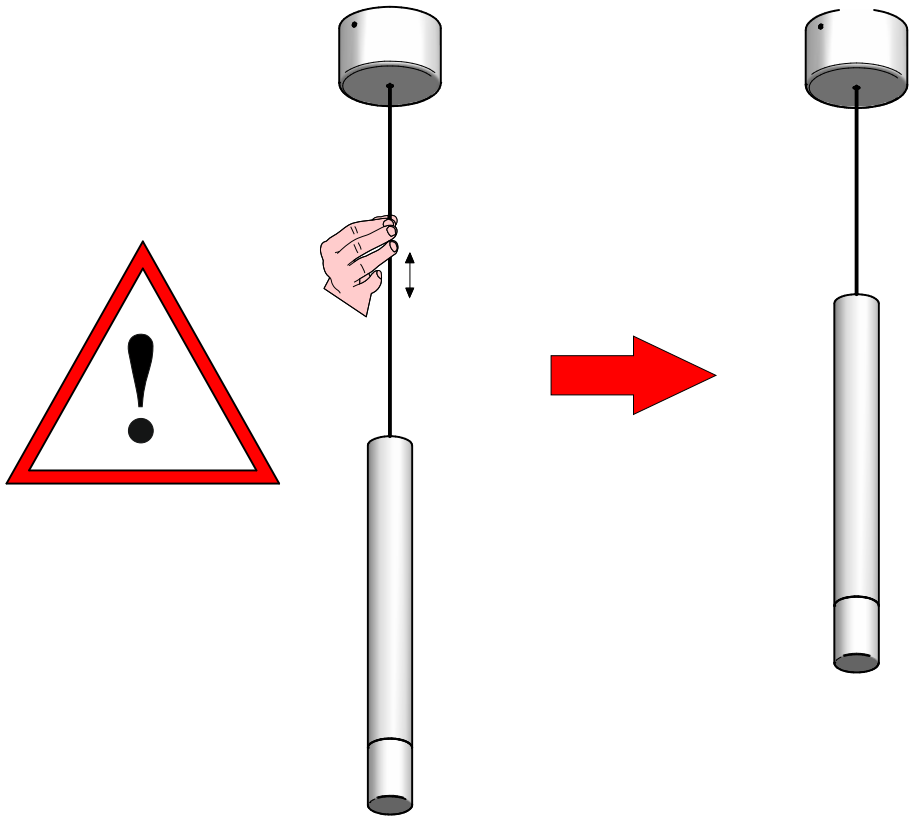

1

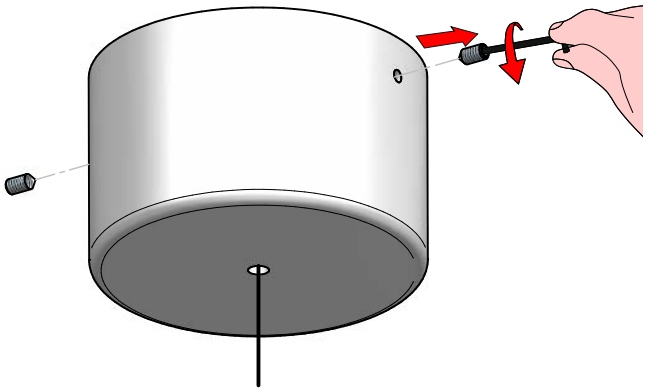

2

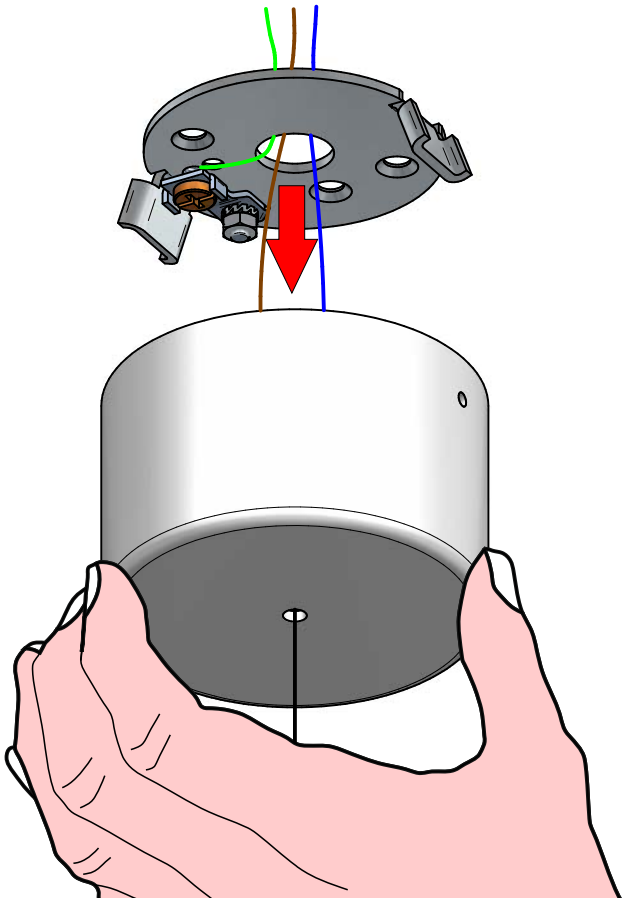

PUCCINI SOSPENSIONE
rev:0

3

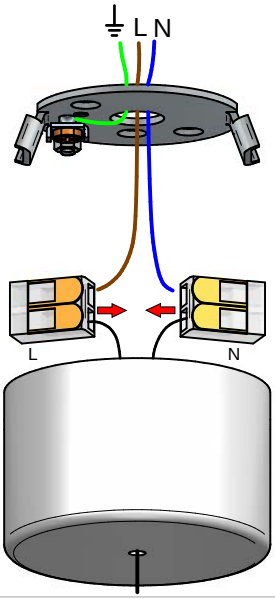

4

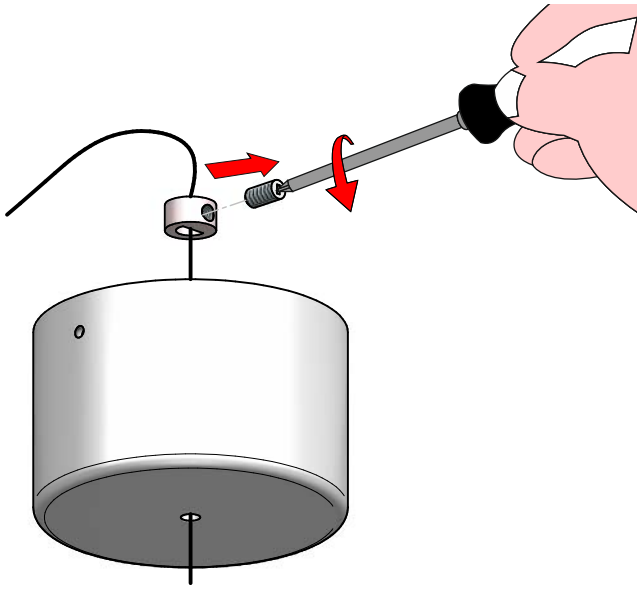

5

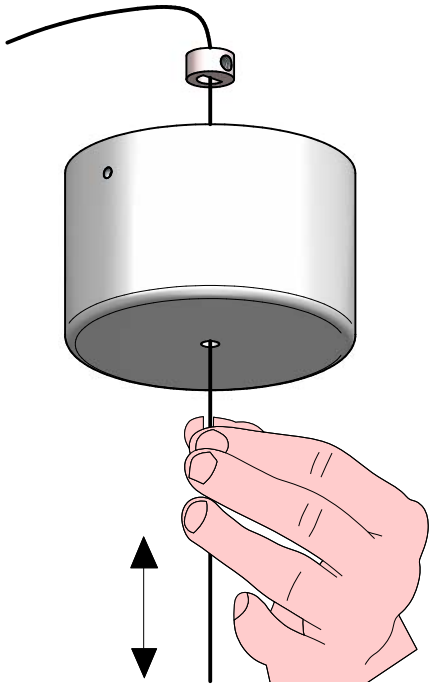

6

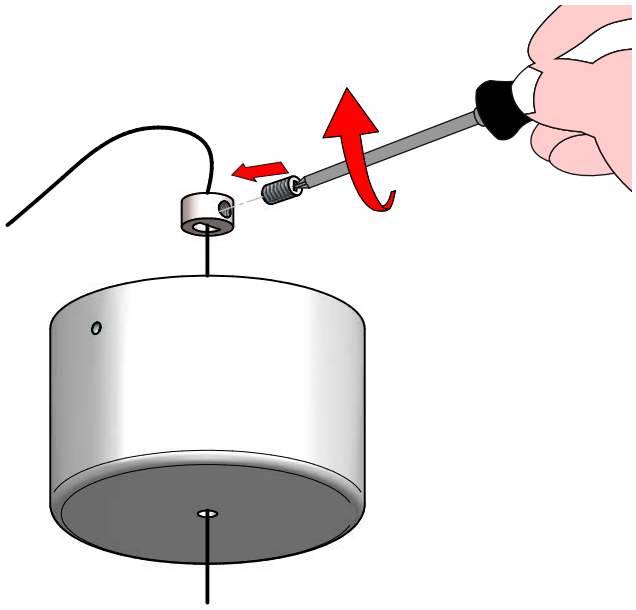

7

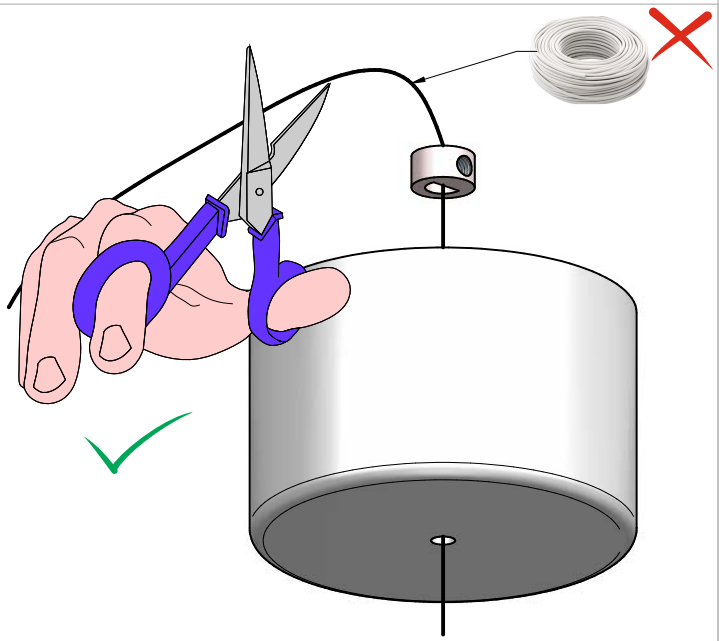

8

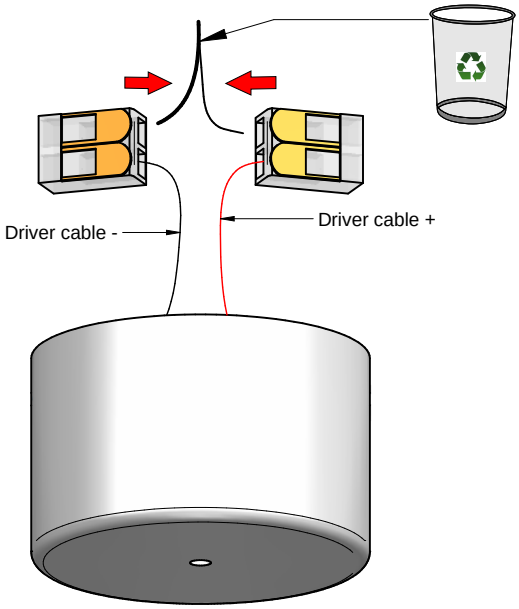

9

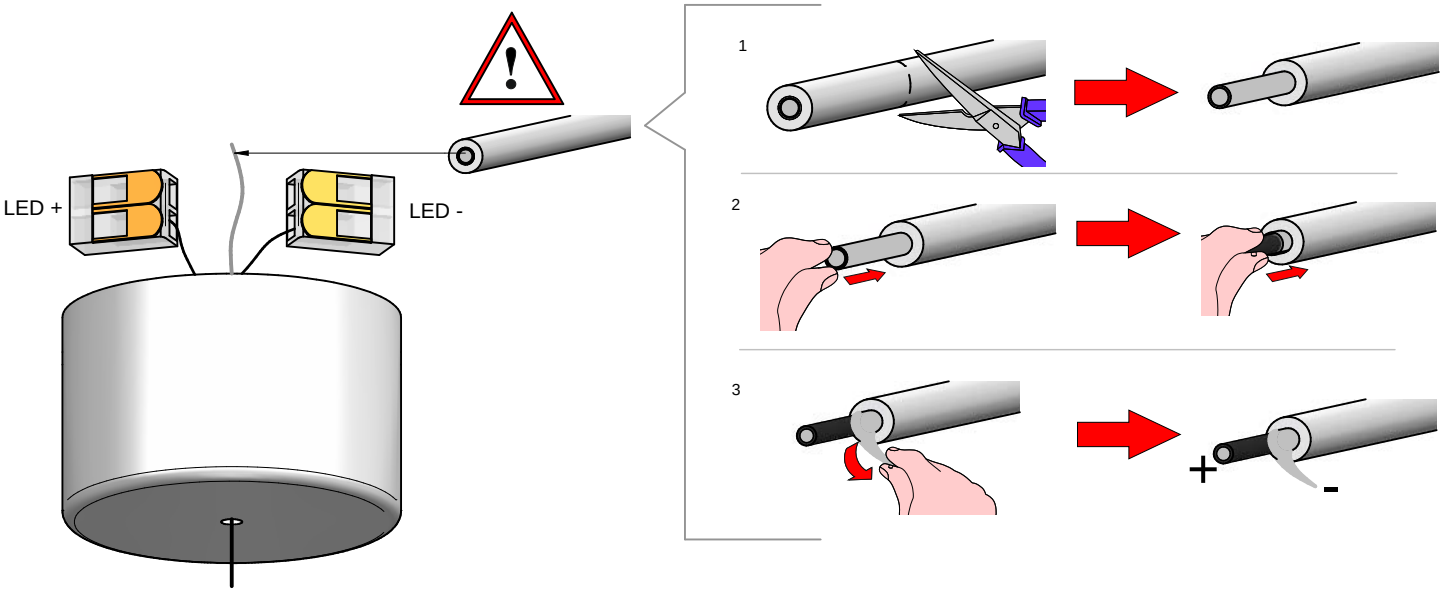

10

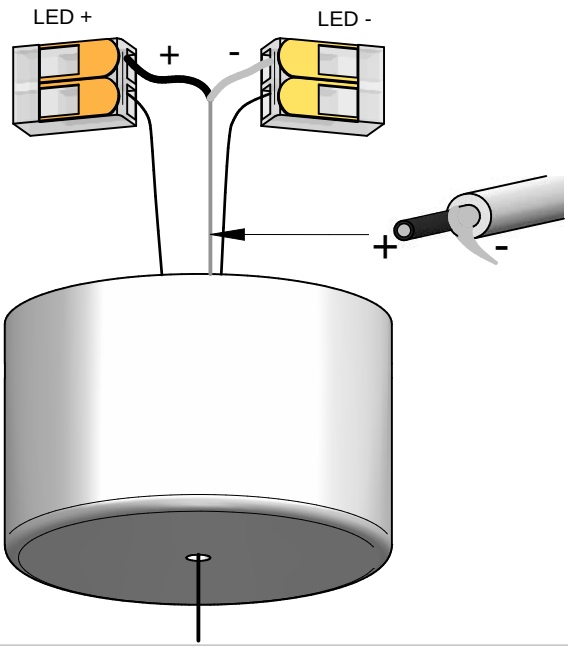

11

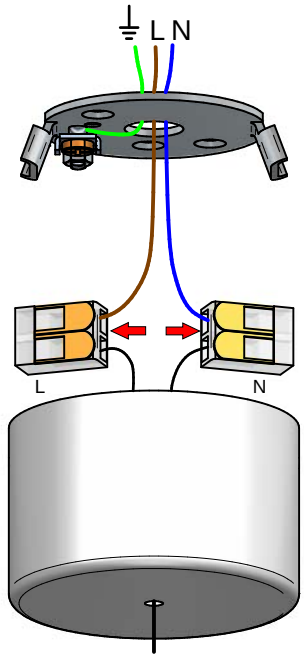

12

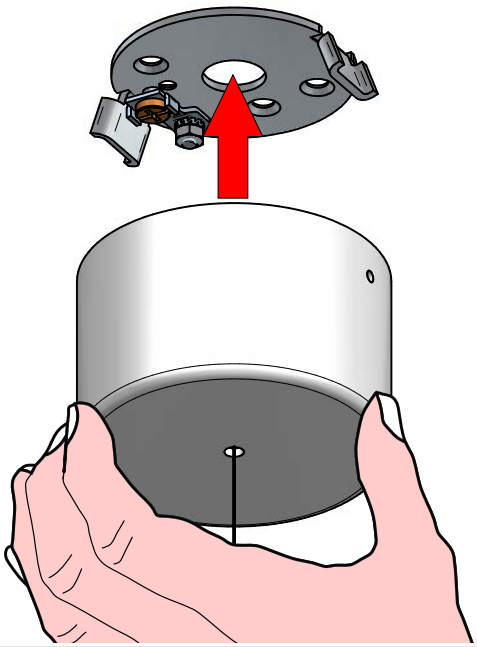

13

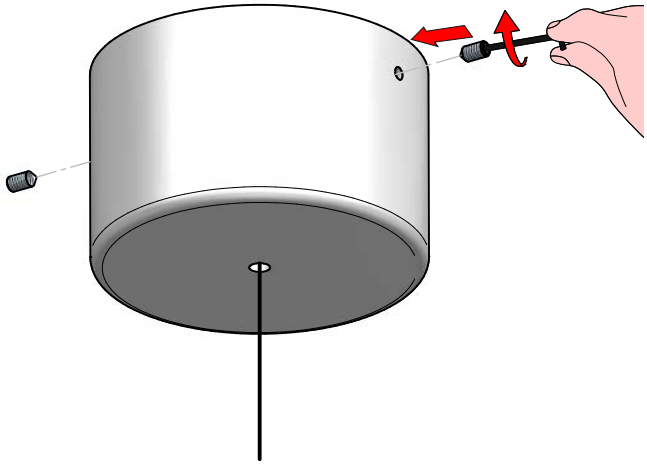

ISTRUZIONI PER IL LAVAGGIO DELL'APPARECCHIO D'ILLUMINAZIONE
LUMINAIRE CARE INSTRUCTIONS
ISTRUCCIONES PARA LIMPIAR LA LUMINARA
INSTRUCTIONS POUR LE LAVAGE DE L'APPAREIL D'ECLAIRAGE
ANLEITUNG ZUR REINIGUNG DES BELEUCHTUNGSGERATS

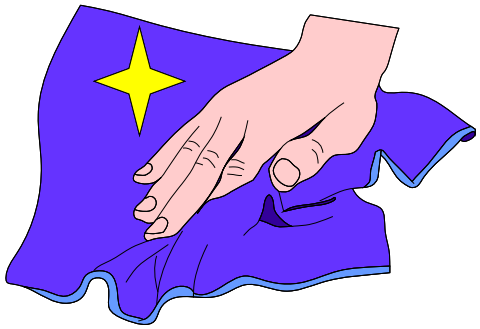



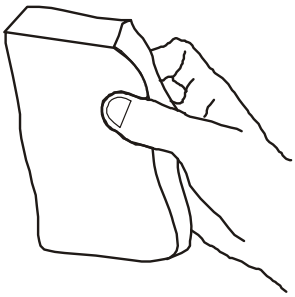

IT - ATTENZIONE!!!

Lavare la superficie del diffusore luce con panno umido, utilizzando solo acqua e sapone neutro.

EN - WARNING!!!

Wipe clean with a cloth damped in water with neutral detergent.

ES - ATENCION!!!

Limpie la superficie del difusor con un pano humedecido con agua y jabon neutro.

FR - ATTENTION!!!

Laver la surface du diffuseur de lumiere a l'aide d'un chiffon humide et en utlisant seulement de l'eau et du savon neutre.

DE - ACHTUNG!!!

Die oberflache vom lampenschirm mit einem feuchten lappen reinigen. De lappen mit wasser und neutralseife befeuchten.

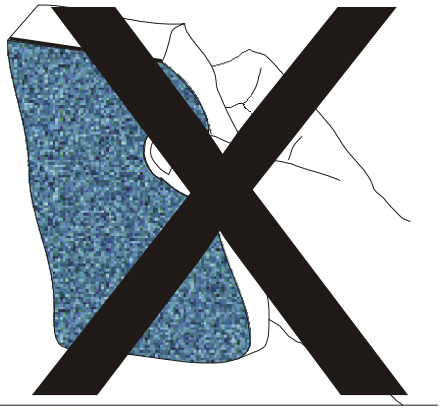

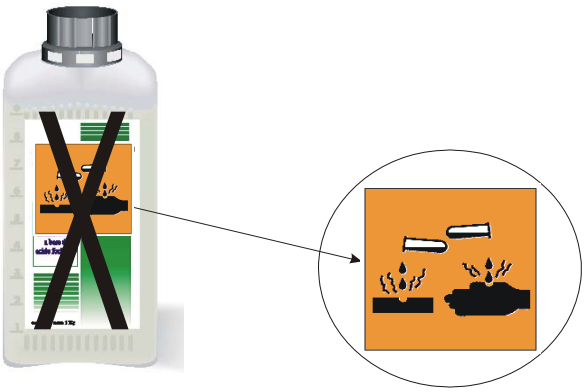

IT - ATTENZIONE!!!

Non utilizzare panni abrasivi e/o solventi.

EN - WARNING!!!

Avoiding the use of chemical solvents and/or abrasive cloths.

ES - ATENCION!!!

No utilizar panos abrasivos y solventes.

FR - ATTENTION!!!

Ne pas utiliser de chiffons abrasifs ou de dissolvants.

DE - ACHTUNG!!!

Abschleifende tuche und/oder losungmittel nicht benutzen.