FGI00475
HORUS - BLANK
rev:0

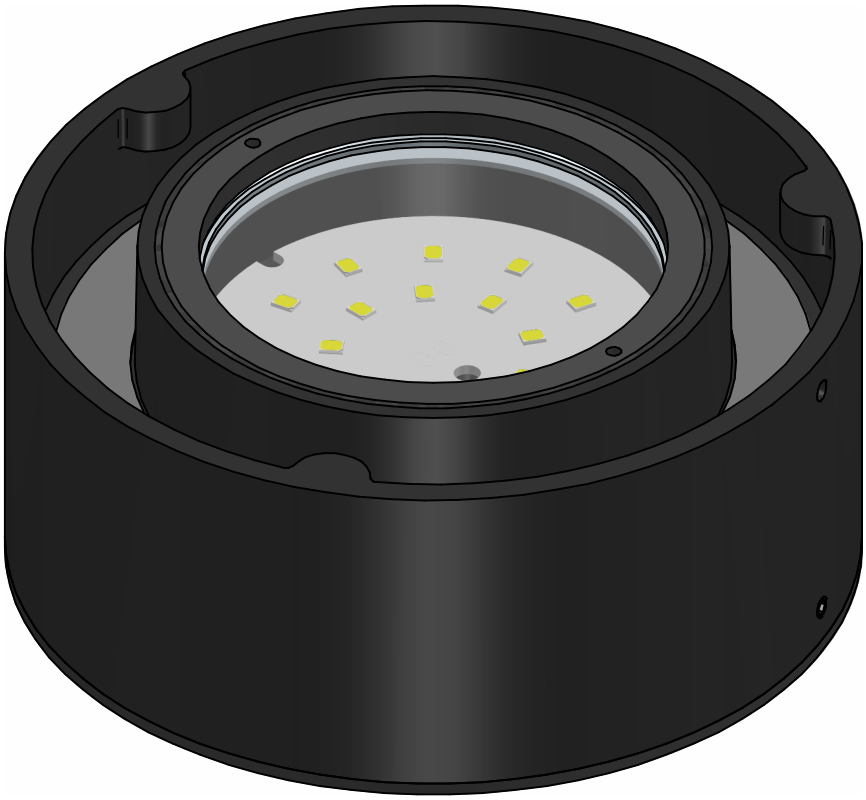

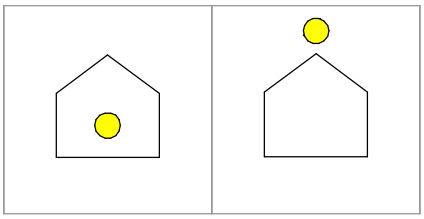

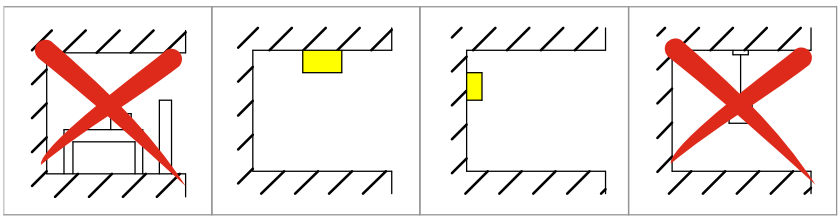

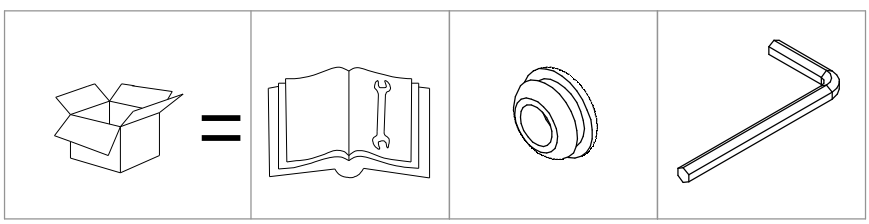

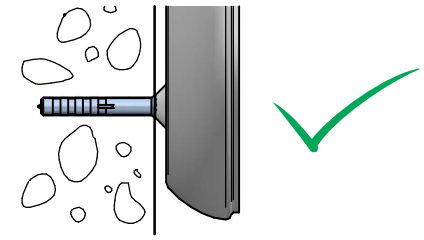

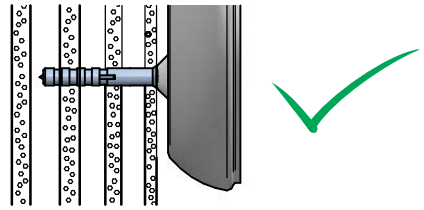

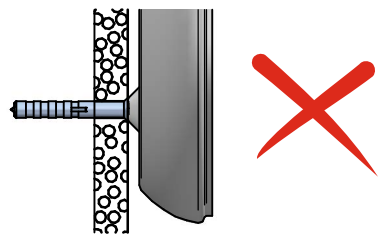

FGI00475
HORUS - BLANK
rev:0

CA074DE3WDI
CA074DE1WDI
CA074DE2WDI
CA074DB3WDI
CA074DB1WDI
CA074DB2WDI
CA074DD3WDI
CA074DD1WDI
CA074DD2WDI
CA074DG3WDI
CA074DG1WDI
CA074DG2WDI

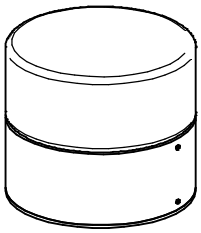

HORUS A

CA120DE3WDI
CA120DE1WDI
CA120DE2WDI
CA120DB3WDI
CA120DB1WDI
CA120DB2WDI
CA120DD3WDI
CA120DD1WDI
CA120DD2WDI
CA120DG3WDI
CA120DG1WDI
CA120DG2WDI

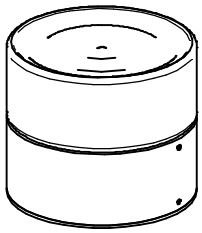

HORUS B

CA121DE3WDI
CA121DE1WDI
CA121DE2WDI
CA121DB3WDI
CA121DB1WDI
CA121DB2WDI
CA121DD3WDI
CA121DD1WDI
CA121DD2WDI
CA121DG3WDI
CA121DG1WDI
CA121DG2WDI

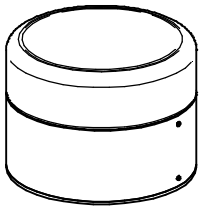

HORUS C

CA122DE3WDI
CA122DE1WDI
CA122DE2WDI
CA122DB3WDI
CA122DB1WDI
CA122DB2WDI
CA122DD3WDI
CA122DD1WDI
CA122DD2WDI
CA122DG3WDI
CA122DG1WDI
CA122DG2WDI

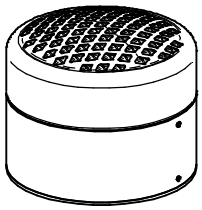

HORUS D

CA116DE4WDI
CA116DE7WDI
CA116DB4WDI
CA116DB7WDI
CA116DD4WDI
CA116DD7WDI
CA116DG4WDI
CA116DG7WDI

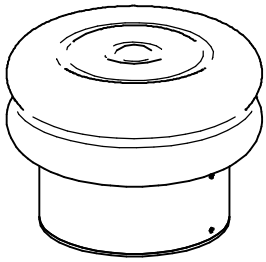

BLANK

1

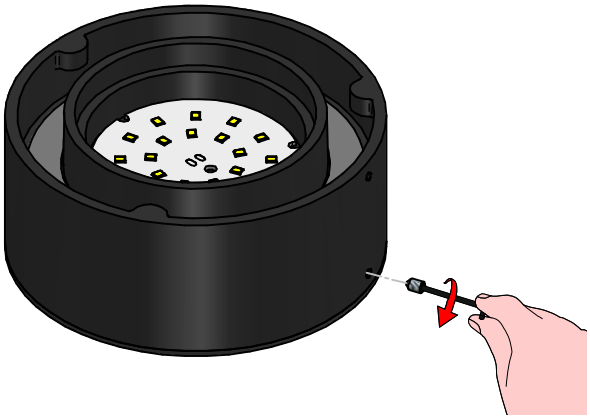

2

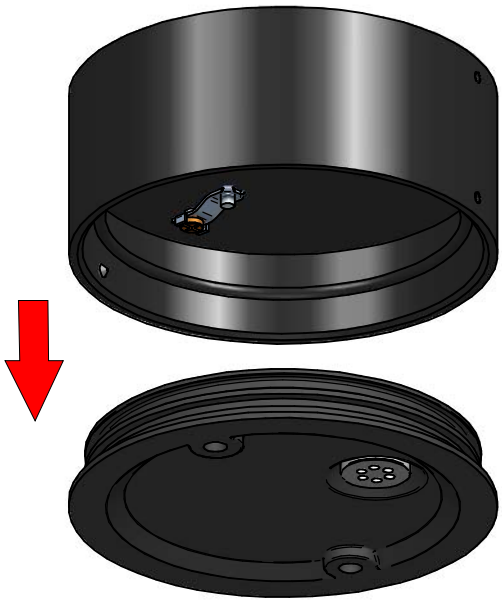

3

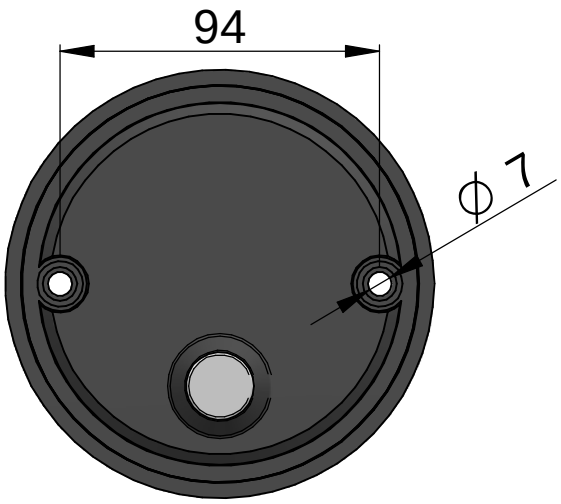

4

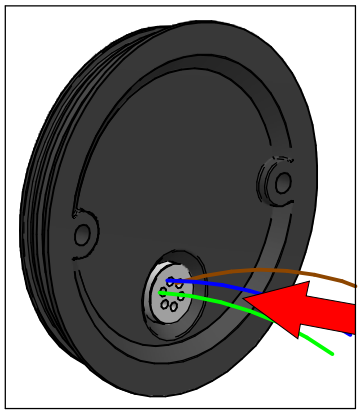

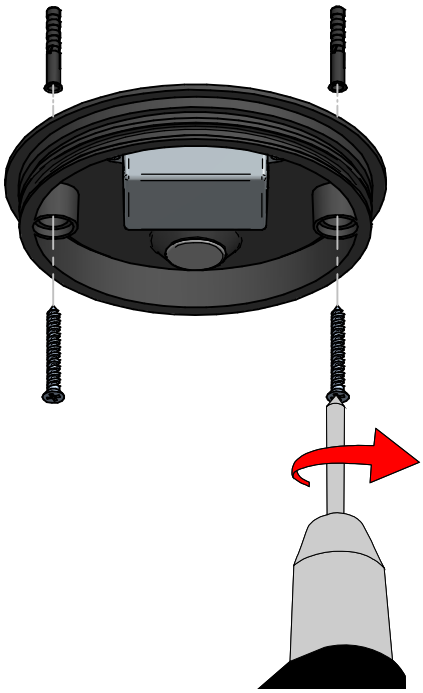

5

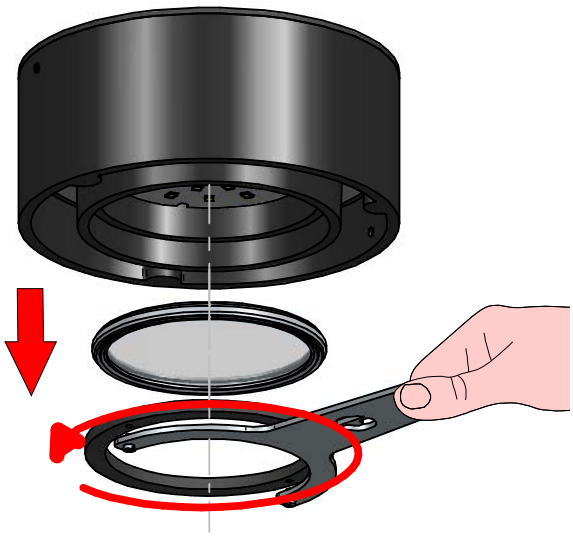

6

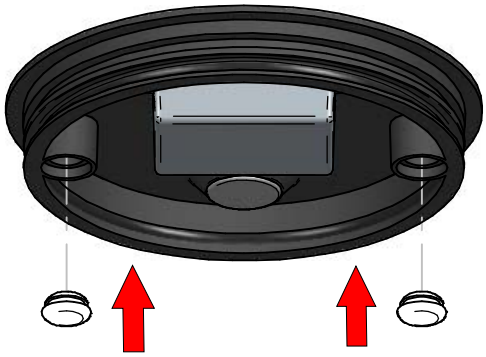

7

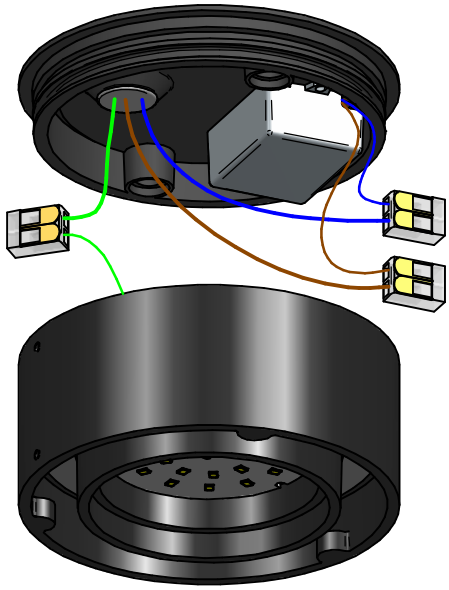

8

FOLLOW THE STEPS IN THE ORDER AS SHOWN TO ALLOW TRAPPED AIR TO ESCAPE BEFORE INSTALLING THE PLASTIC DIFFUSER IN STEP 9

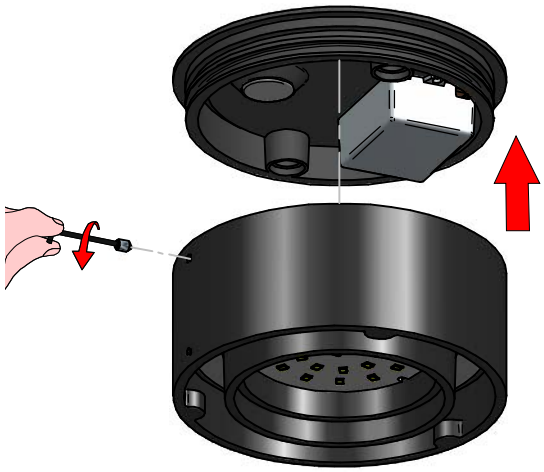

9

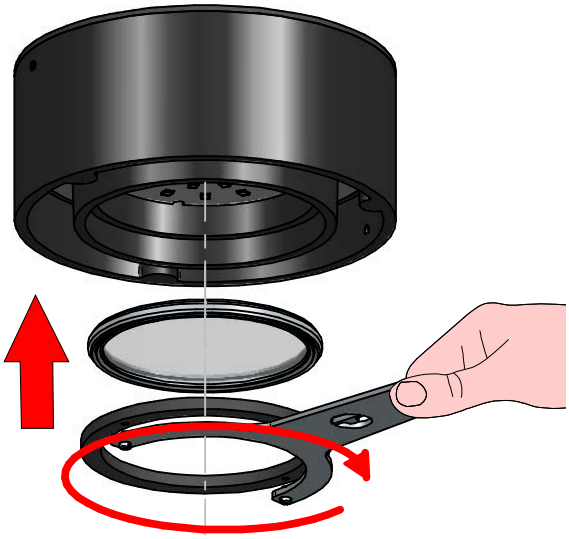

10

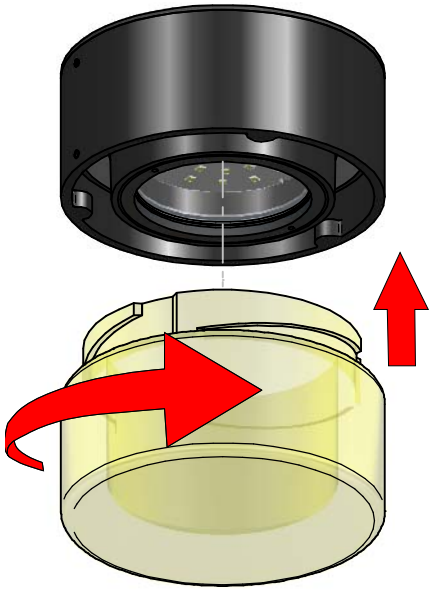

11

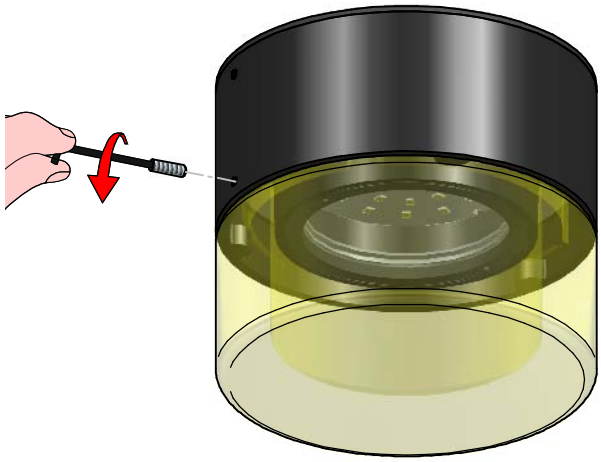

ISTRUZIONI PER IL LAVAGGIO DELL'APPARECCHIO D'ILLUMINAZIONE
LUMINAIRE CARE INSTRUCTIONS
ISTRUCCIONES PARA LIMPIAR LA LUMINARA
INSTRUCTIONS POUR LE LAVAGE DE L'APPAREIL D'ECLAIRAGE
ANLEITUNG ZUR REINIGUNG DES BELEUCHTUNGSGERATS

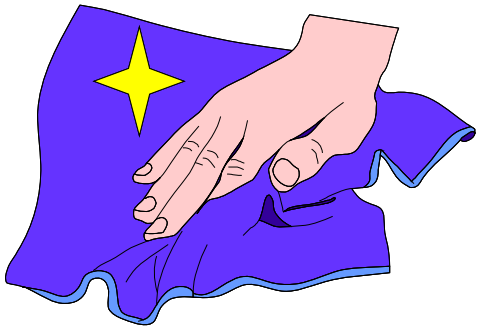



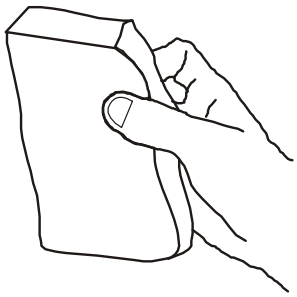

IT - ATTENZIONE!!!

Lavare la superficie del diffusore luce con panno umido, utilizzando solo acqua e sapone neutro.

EN - WARNING!!!

Wipe clean with a cloth damped in water with neutral detergent.

ES - ATENCION!!!

Limpie la superficie del difusor con un pano humedecido con agua y jabon neutro.

FR - ATTENTION!!!

Laver la surface du diffuseur de lumiere a l'aide d'un chiffon humide et en utlisant seulement de l'eau et du savon neutre.

DE - ACHTUNG!!!

Die oberflache vom lampenschirm mit einem feuchten lappen reinigen. De lappen mit wasser und neutralseife befeuchten.

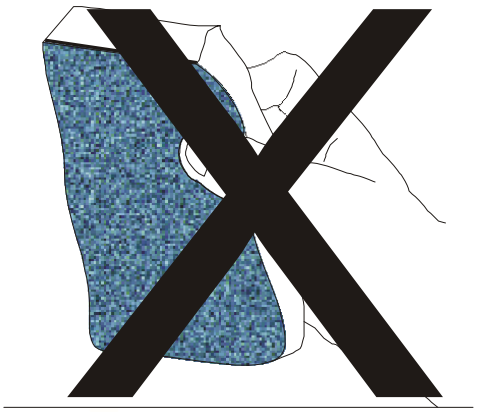



IT - ATTENZIONE!!!

Non utilizzare panni abrasivi e/o solventi.

EN - WARNING!!!

Avoiding the use of chemical solvents and/or abrasive cloths.

ES - ATENCION!!!

No utilizar panos abrasivos y solventes.

FR - ATTENTION!!!

Ne pas utiliser de chiffons abrasifs ou de dissolvants.

DE - ACHTUNG!!!

Abschleifende tuche und/oder losungmittel nicht benutzen.