BOND PRO
rev: 0



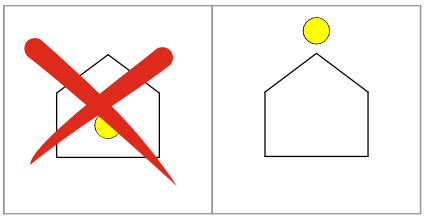

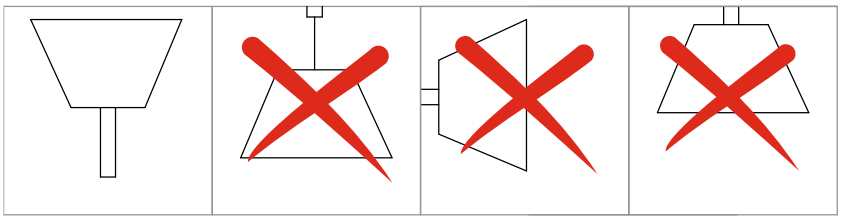

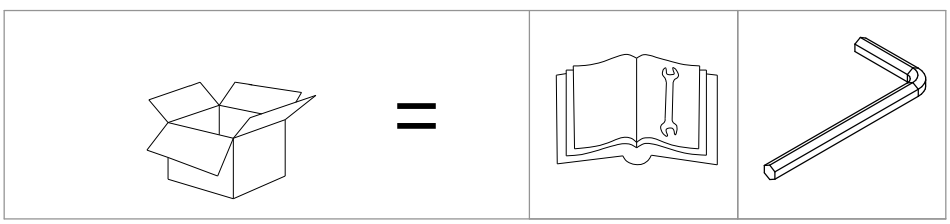

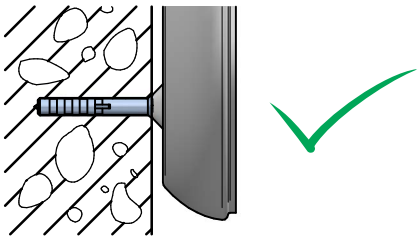

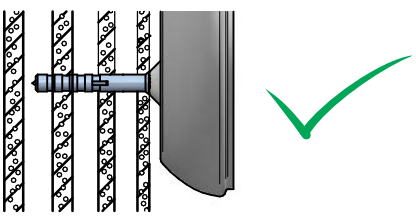

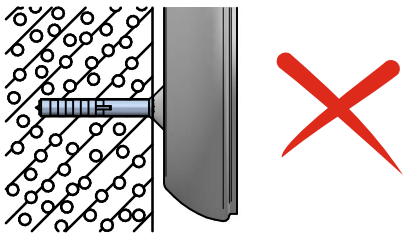

H 210

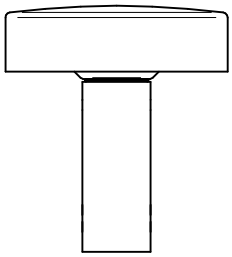

3000K	
ON/OFF	DALI
81097W00	C01269GGWDI
81098W00	C01269BBWDI
81099W00	C01269DBWDI
81100W00	C01269SEWDI

2700K	
ON/OFF	DALI
C01268GGMDI	C01269GGMDI
C01268BBMDI	C01269BBMDI
C01268DBMDI	C01269DBMDI
C01268SEMDI	C01269SEMDI

4000K	
ON/OFF	DALI
81097N00	C01269GGNDI
81098N00	C01269BBNDI
81099N00	C01269DBNDI
81100N00	C01269SENDI

H 510

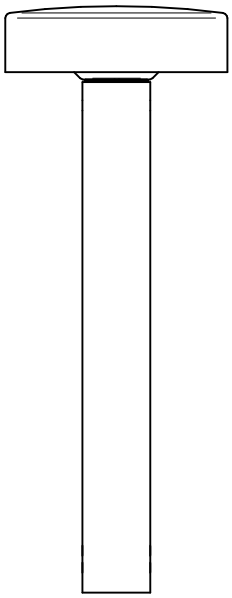

2700K	
ON/OFF	DALI
C01270GGMDI	C01271GGMDI
C01270BBMDI	C01271BBMDI
C01270DBMDI	C01271DBMDI
C01270SEMDI	C01271SEMDI

3000K	
ON/OFF	DALI
81101W00	C01271GGWDI
81102W00	C01271BBWDI
81103W00	C01271DBWDI
81104W00	C01271SEWDI

4000K	
ON/OFF	DALI
81101N00	C01271GGNDI
81102N00	C01271BBNDI
81103N00	C01271DBNDI
81104N00	C01271SENDI

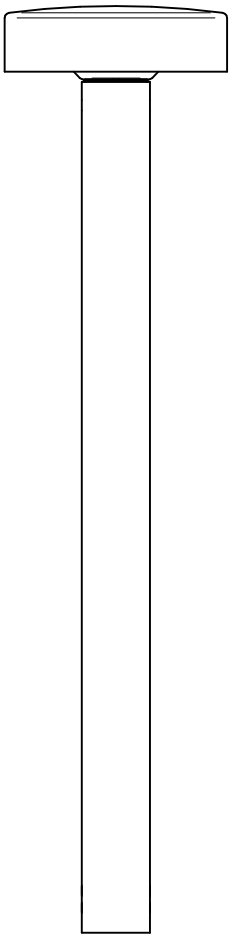

H 810

2700K	
ON/OFF	DALI
C01272GGMDI	C01273GGMDI
C01272BBMDI	C01273BBMDI
C01272DBMDI	C01273DBMDI
C01272SEMDI	C01273SEMDI

3000K	
ON/OFF	DALI
81105W00	C01273GGWDI
81106W00	C01273BBWDI
81107W00	C01273DBWDI
81108W00	C01273SEWDI

4000K	
ON/OFF	DALI
81105N00	C01273GGNDI
81106N00	C01273BBNDI
81107N00	C01273DBNDI
81108N00	C01273SENDI

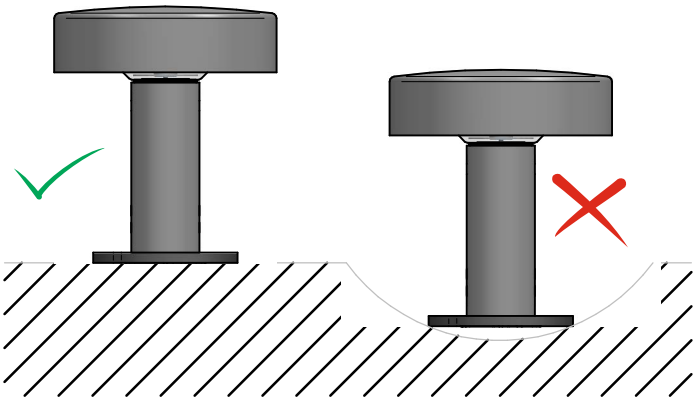

1

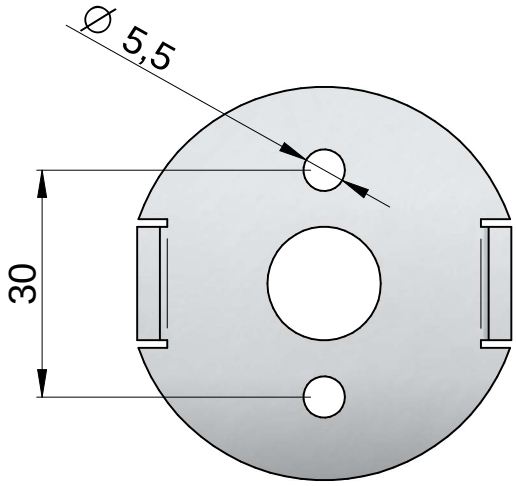

2

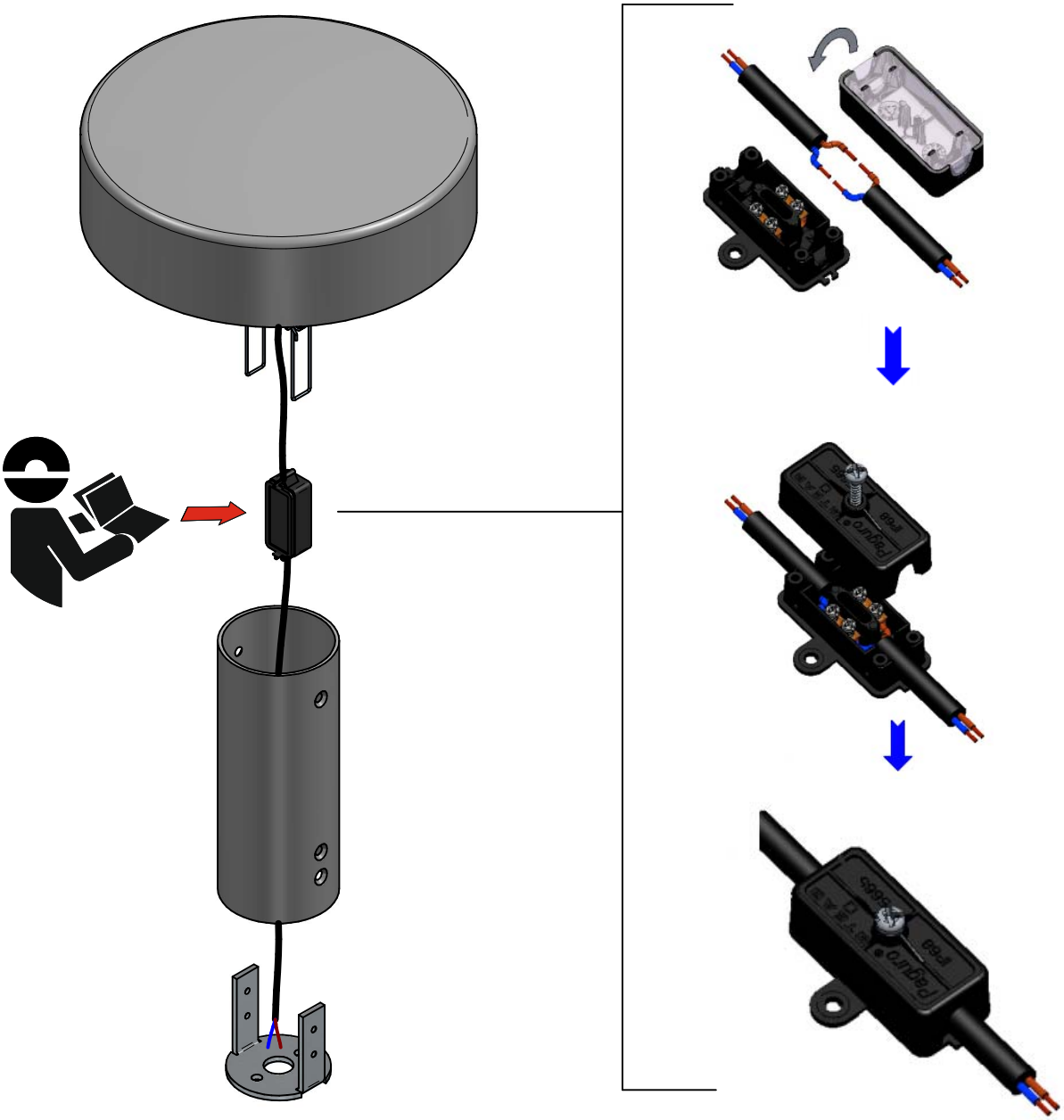

3

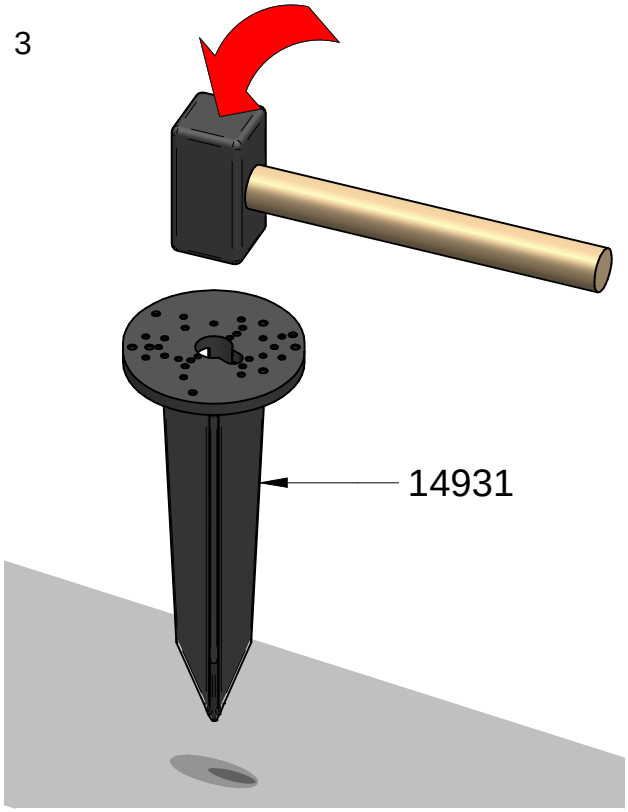

4

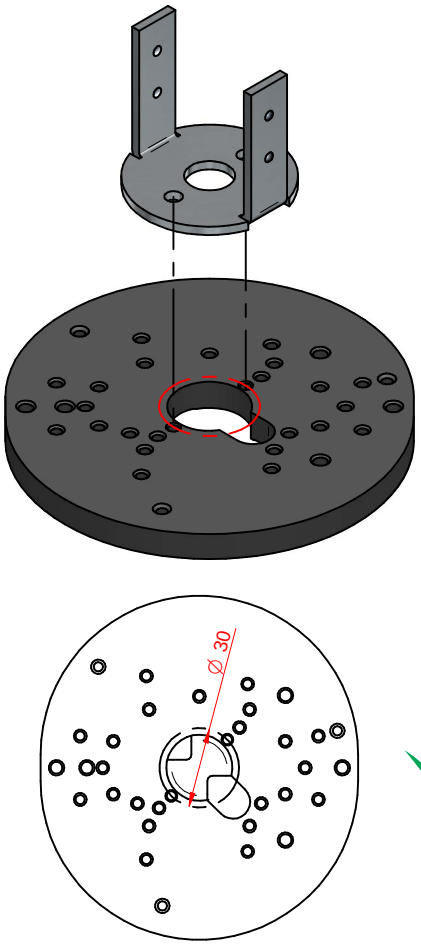

5

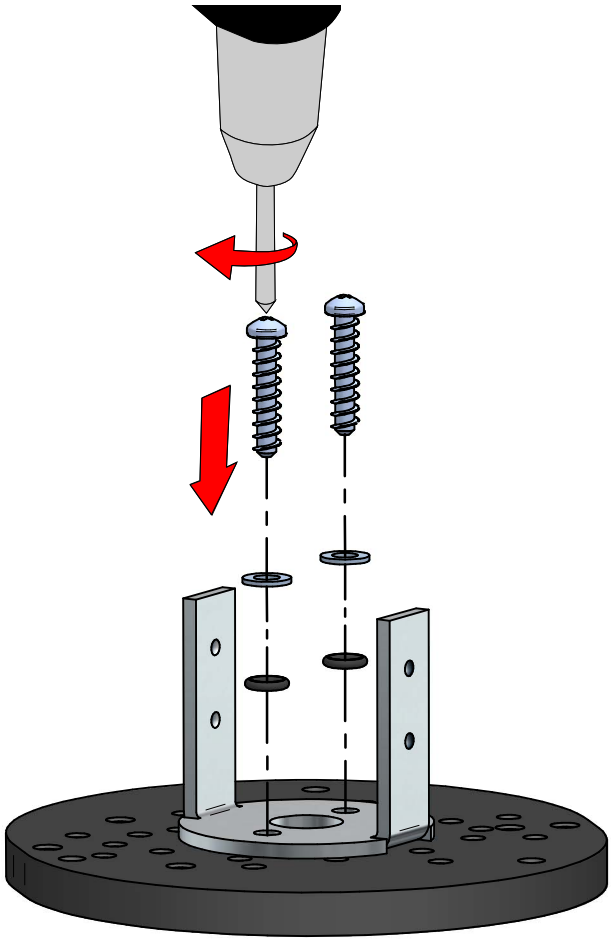

6

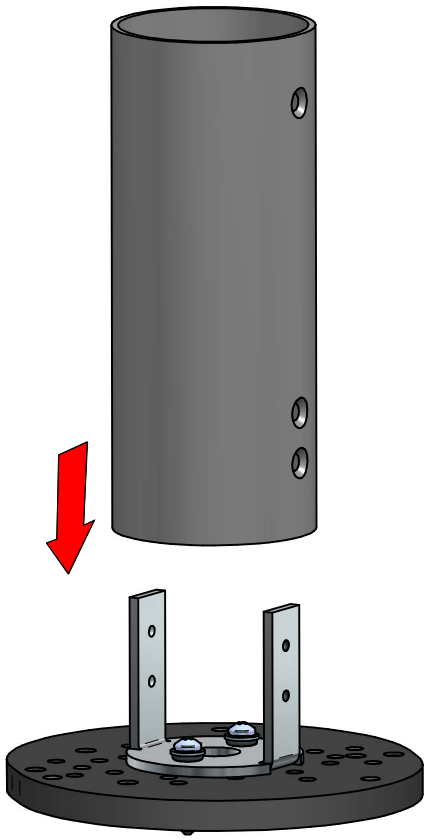

7

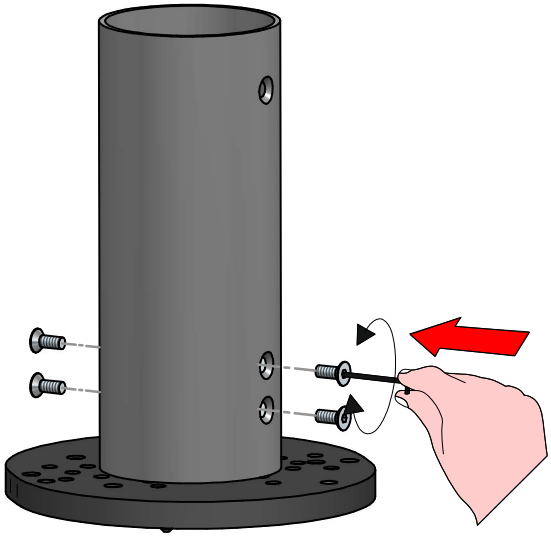

8

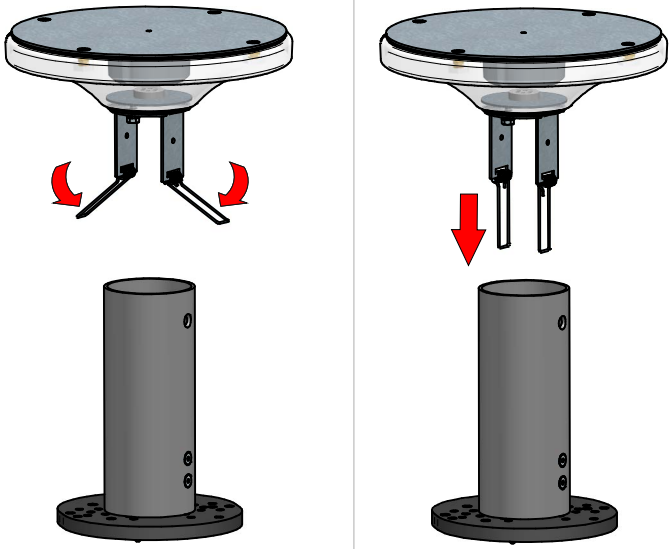

9

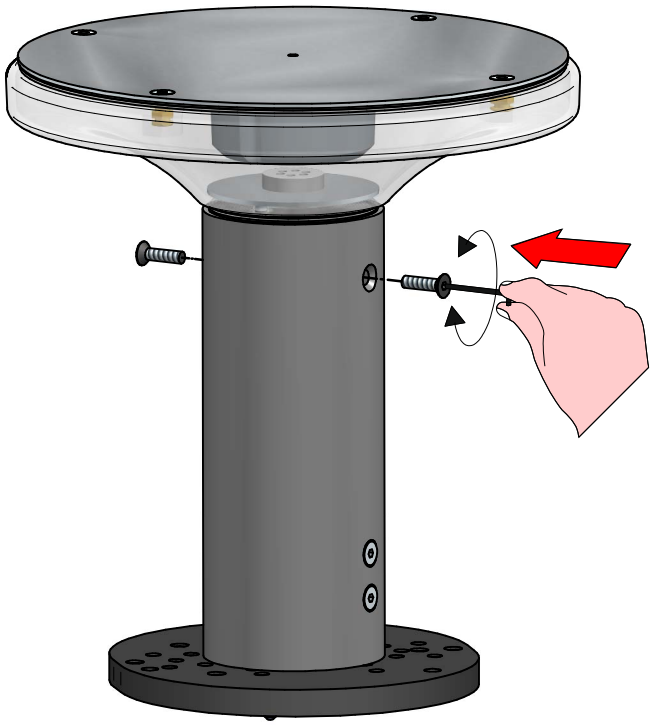

10

