14210
KIT OUTDOOR
rev:00

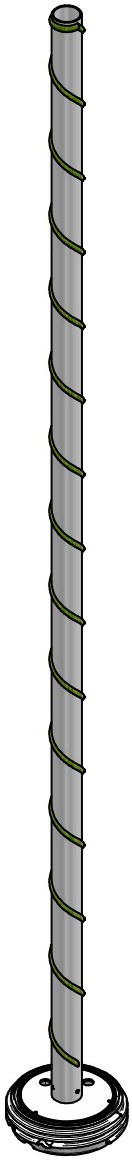

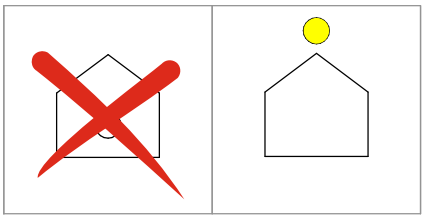

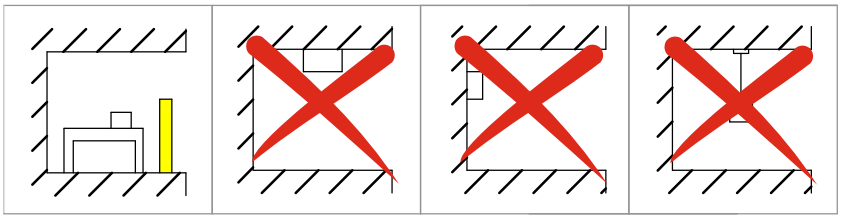

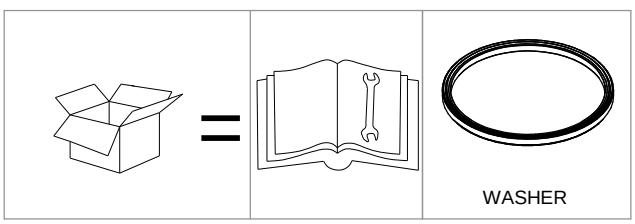

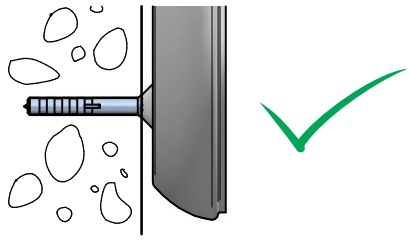

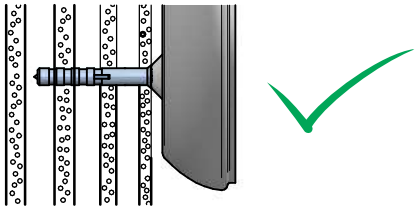

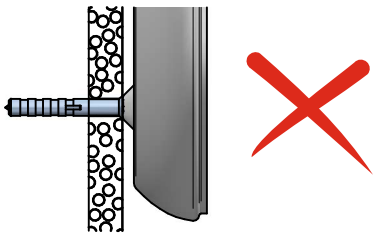

14210
KIT OUTDOOR
rev:00

1

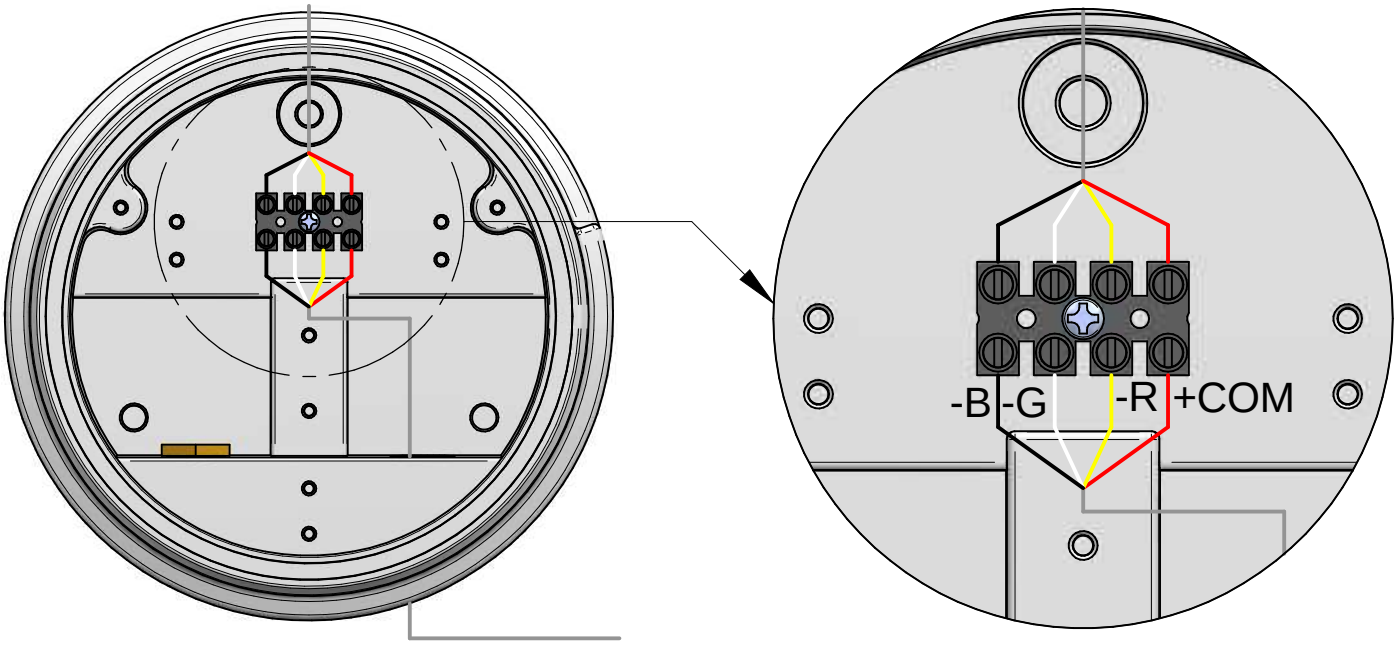

2

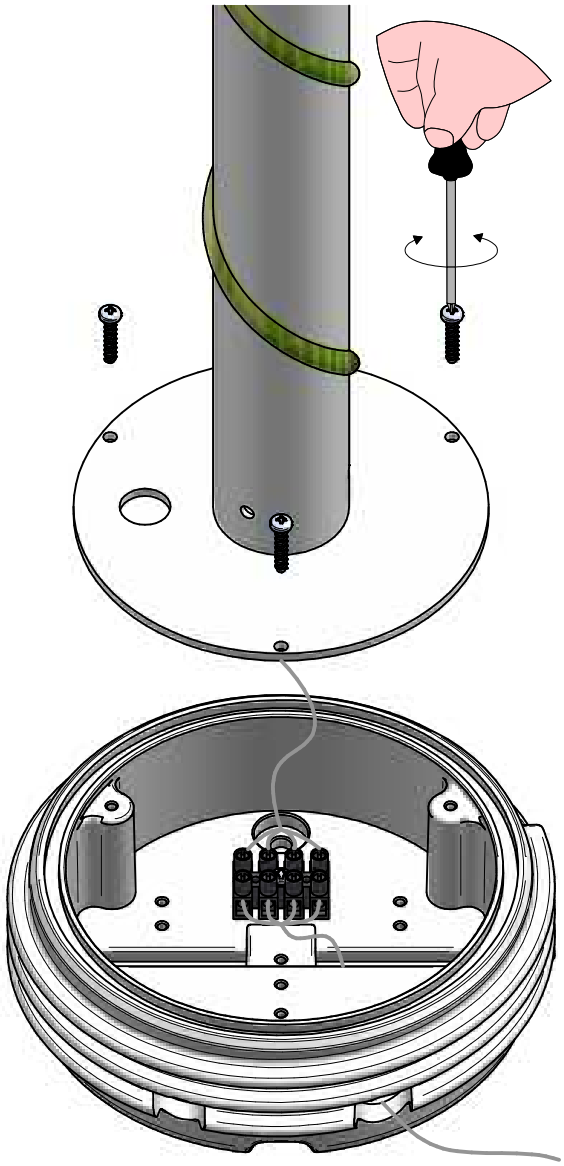

3

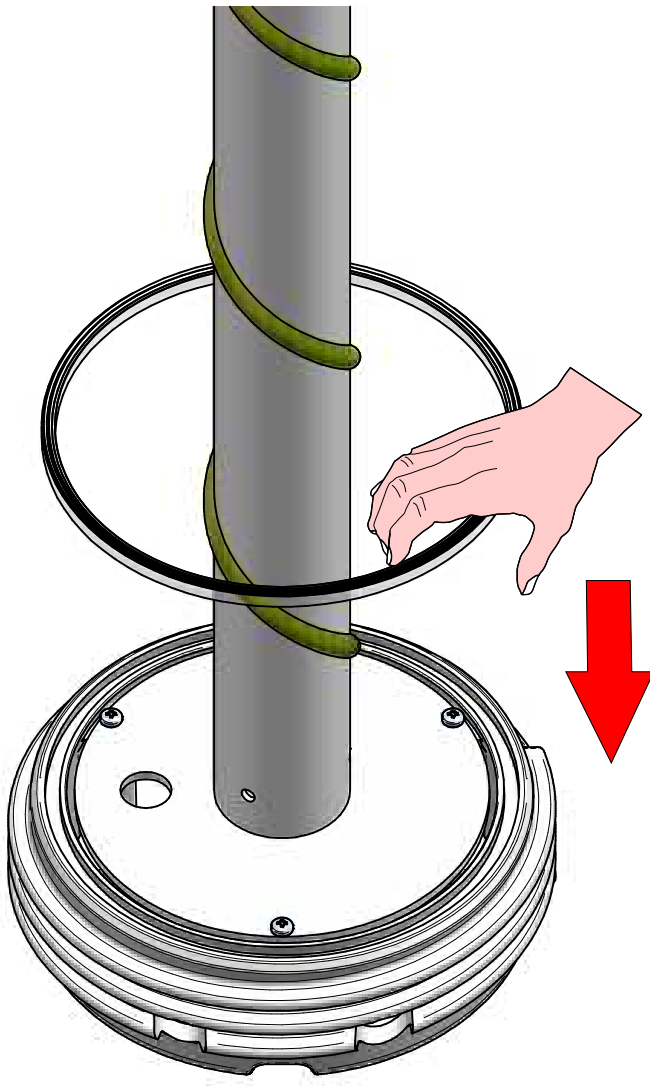

4

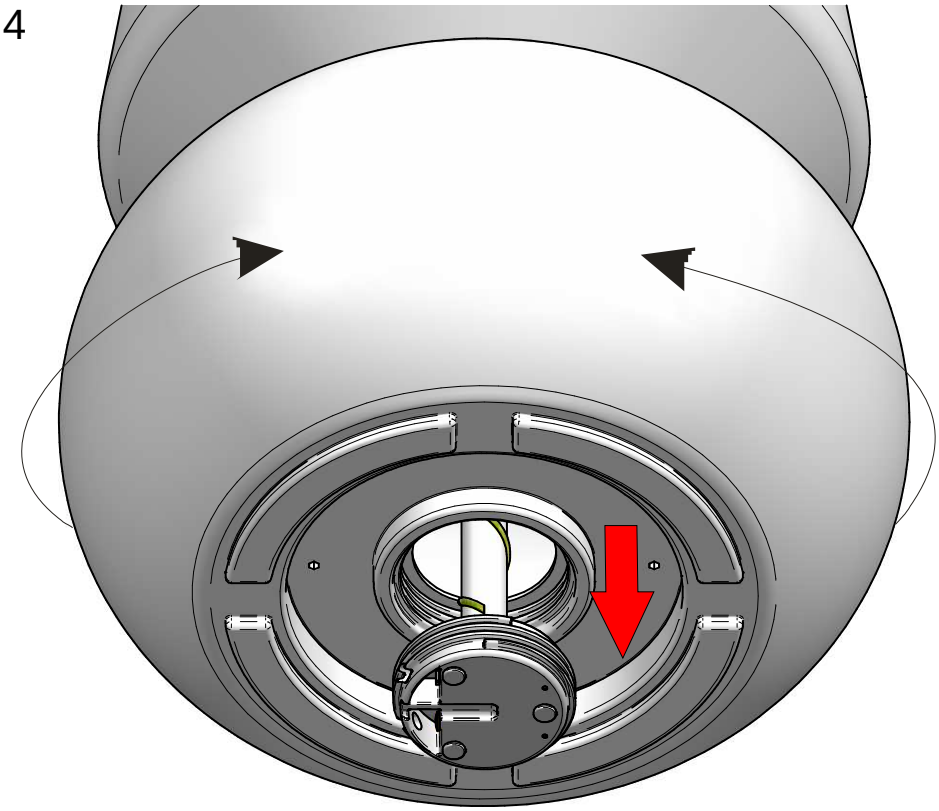

COMPATIBLE ARTICLE

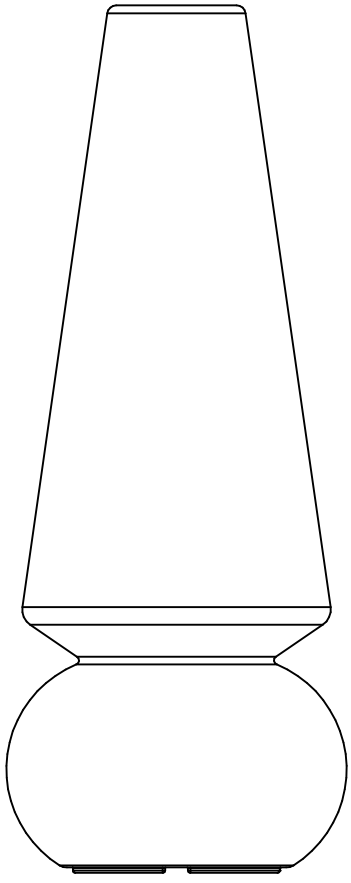

MARGE +  + 
h 10mm
h 5mm

16000