51366
VISION
rev: 00



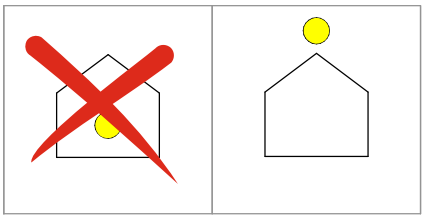

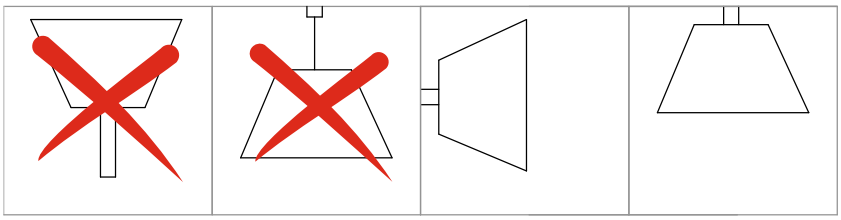

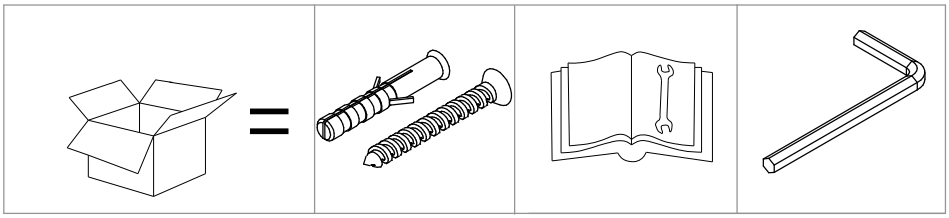

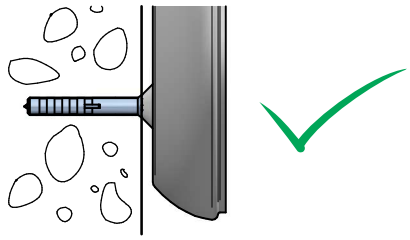

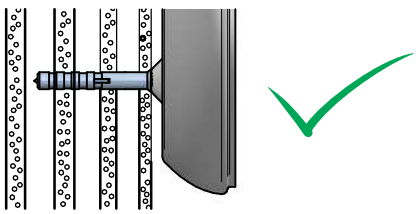

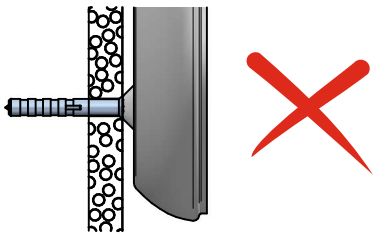

1

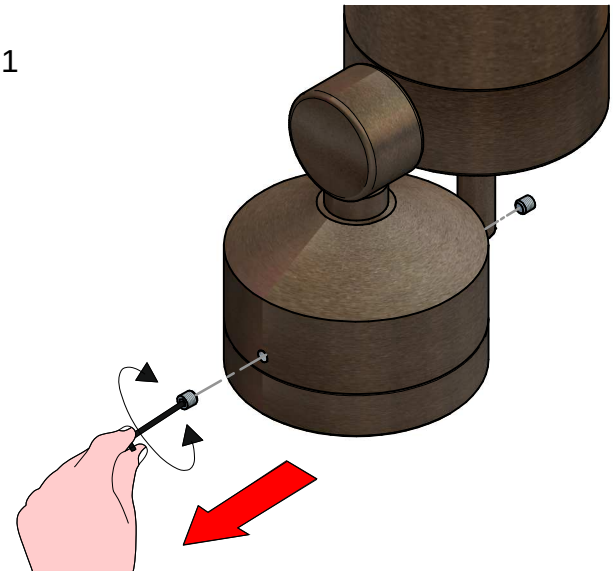

2

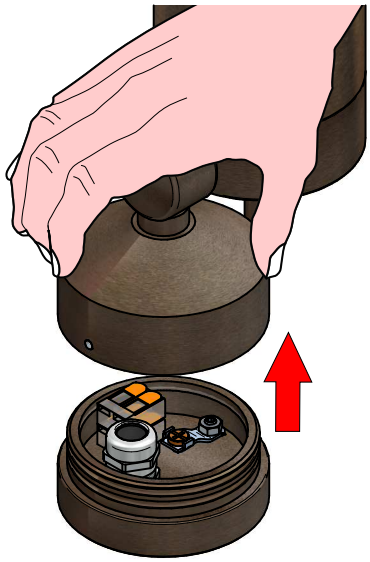

3

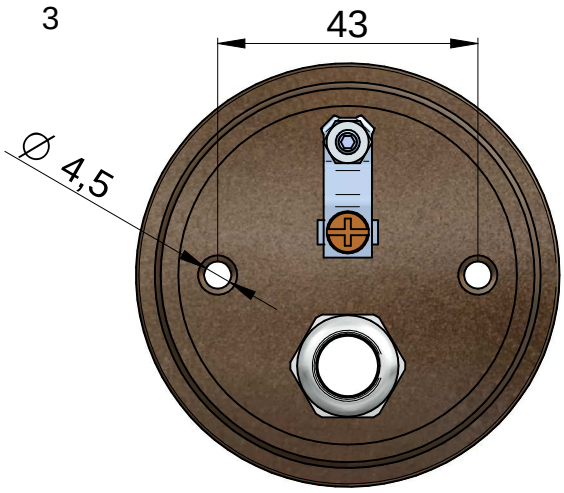

4

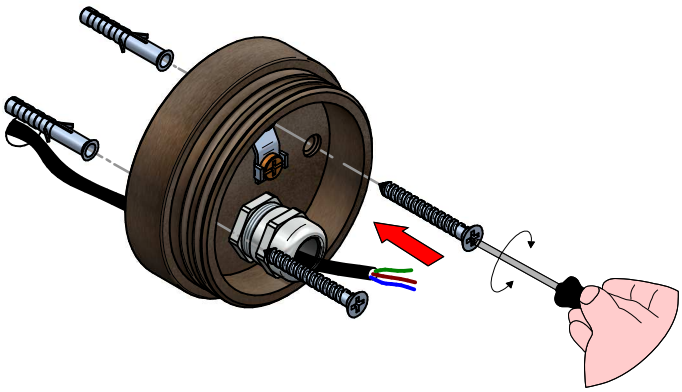

5

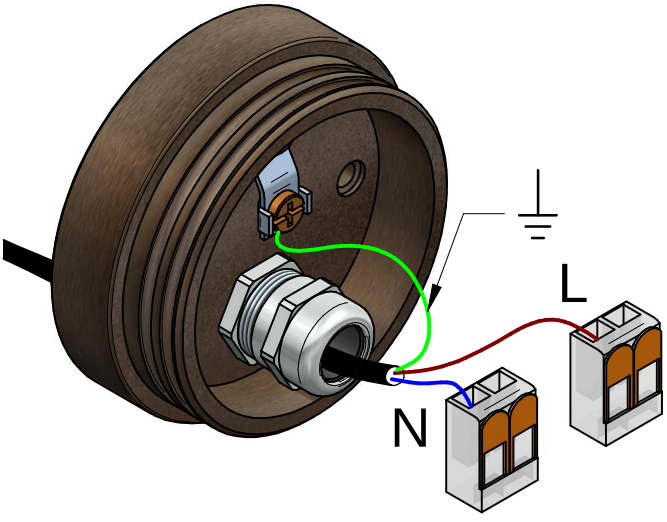

6

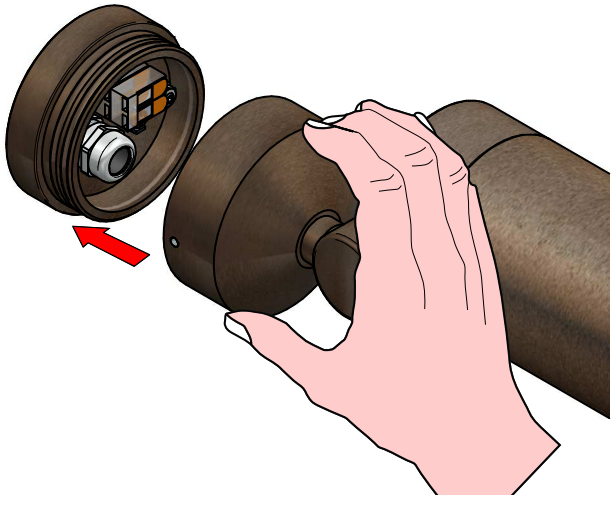

5

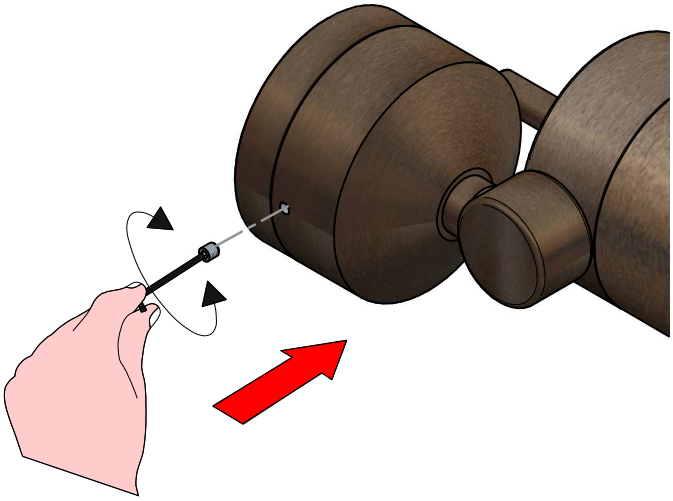

6

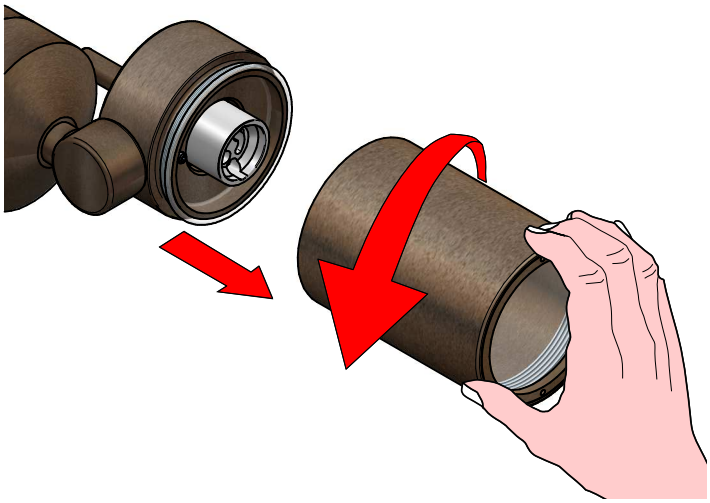

7

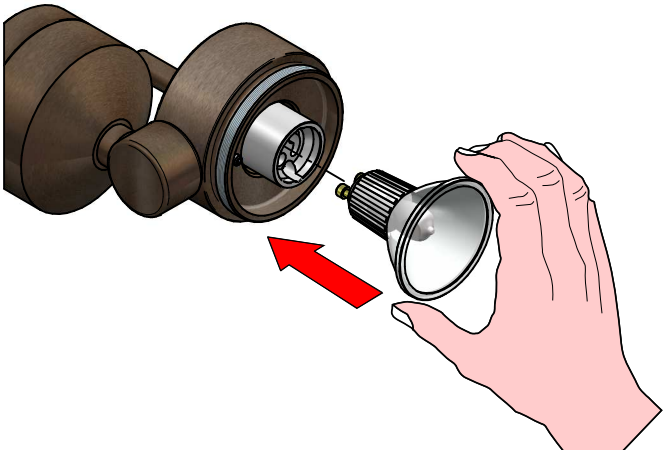

8

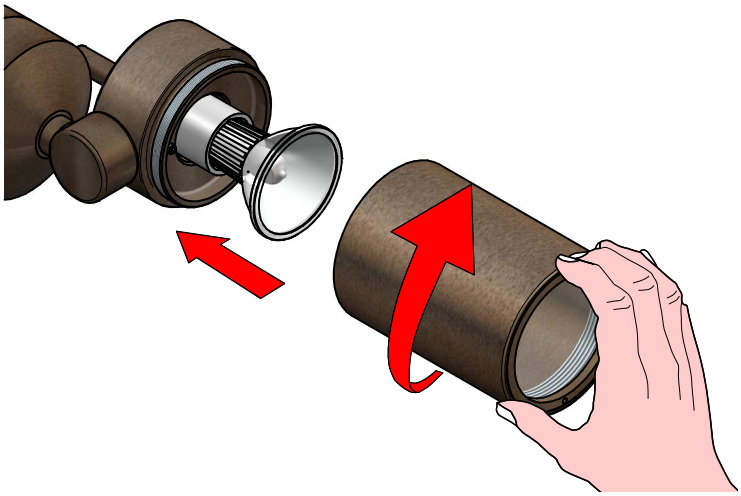

9

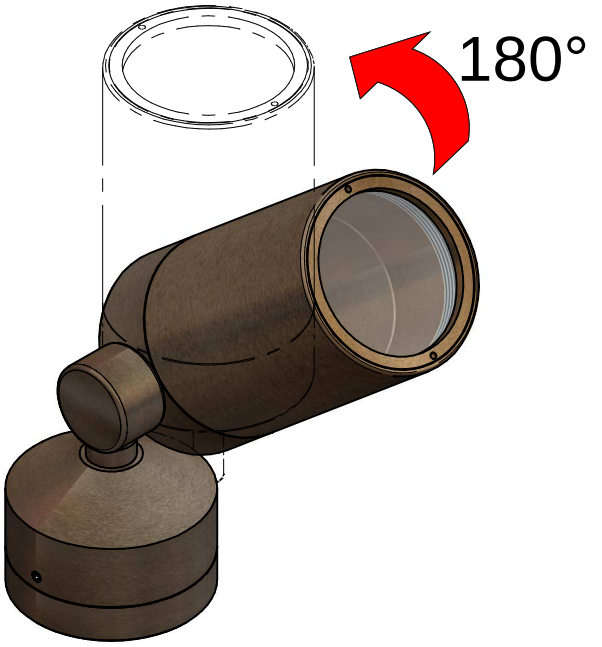

51365
VISION
rev: 00



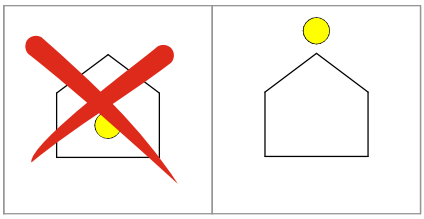

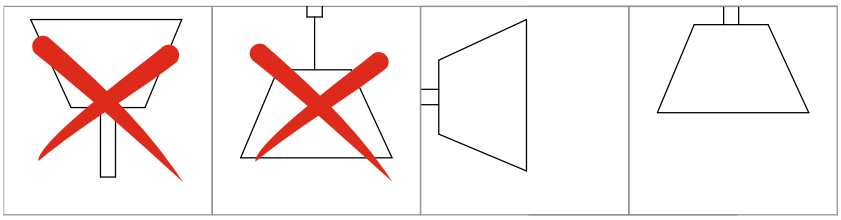

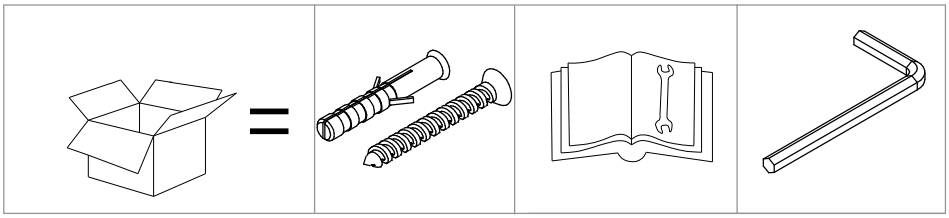

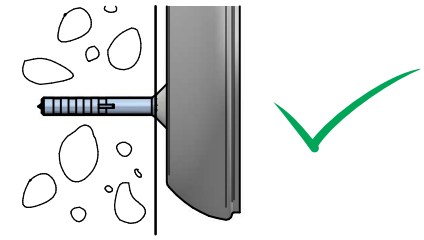

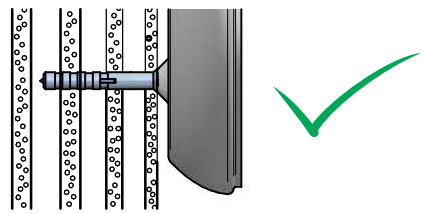

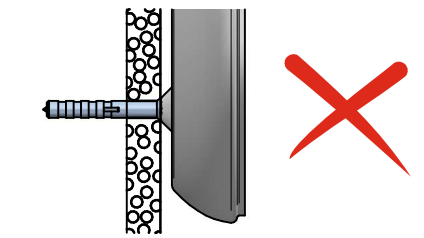

1

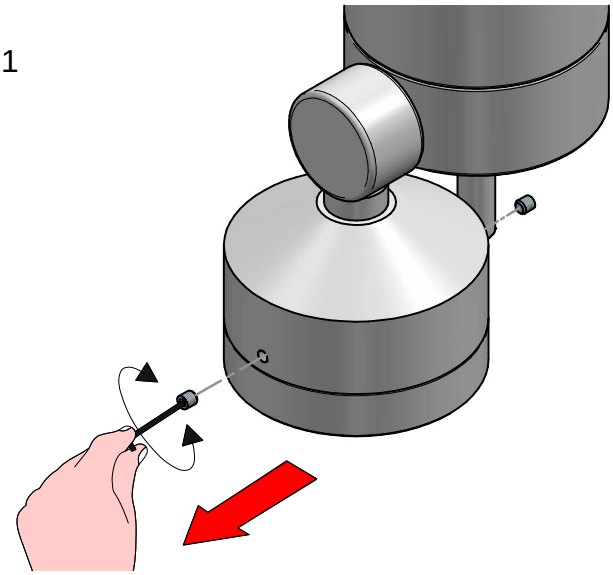

2

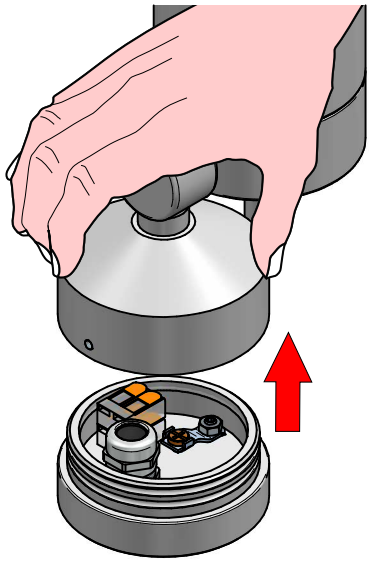

3

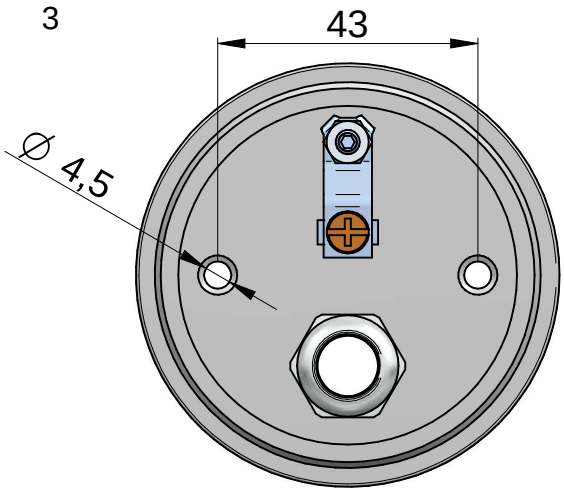

4

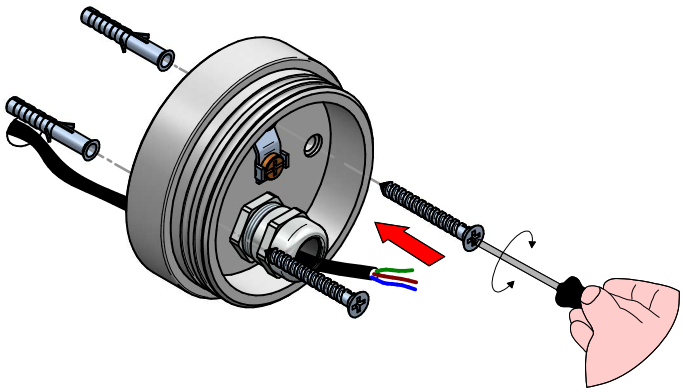

5

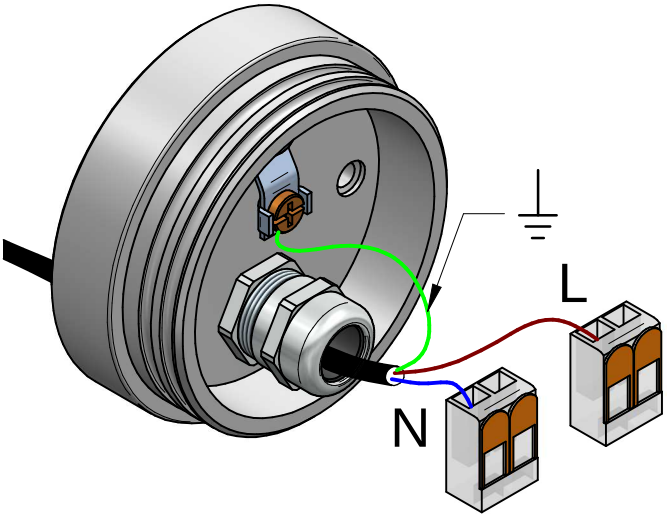

6

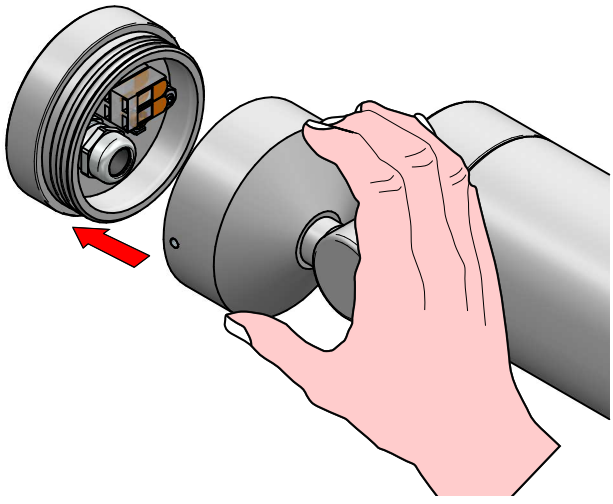

5

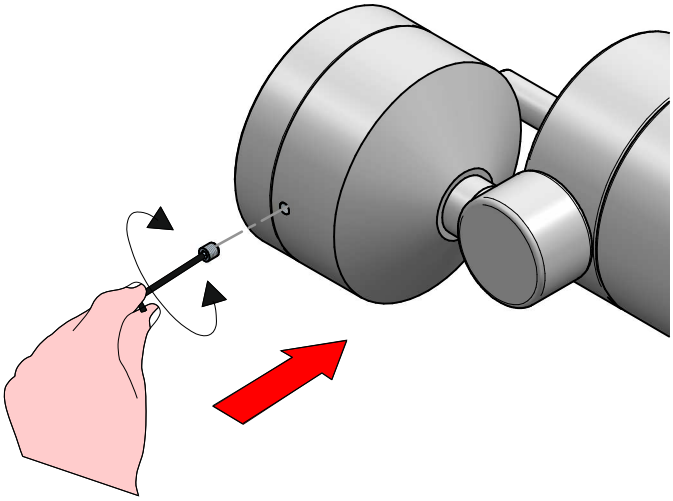

6

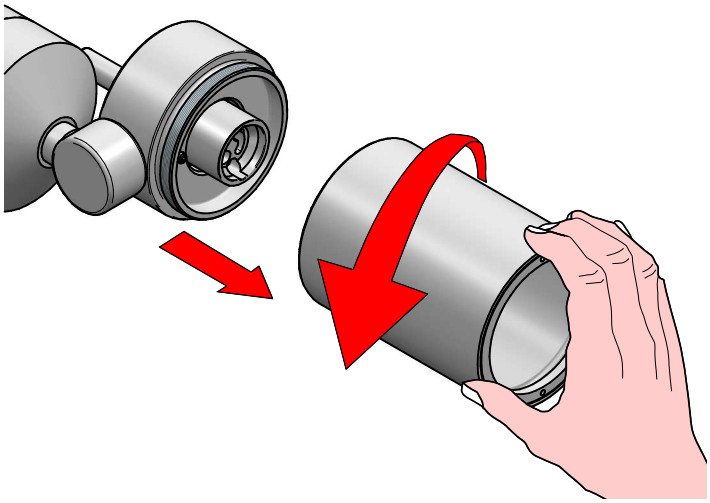

7

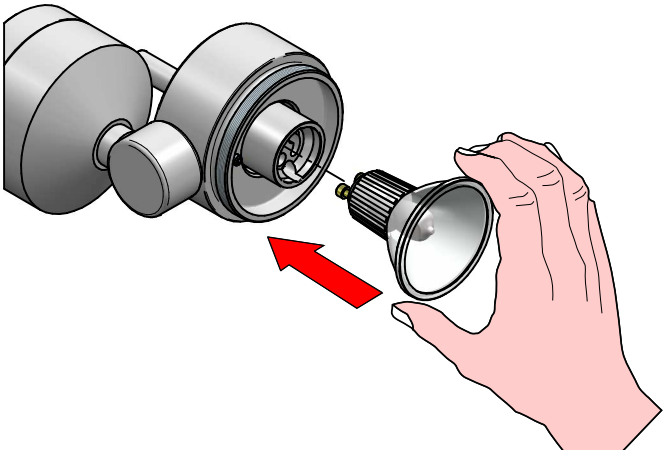

8

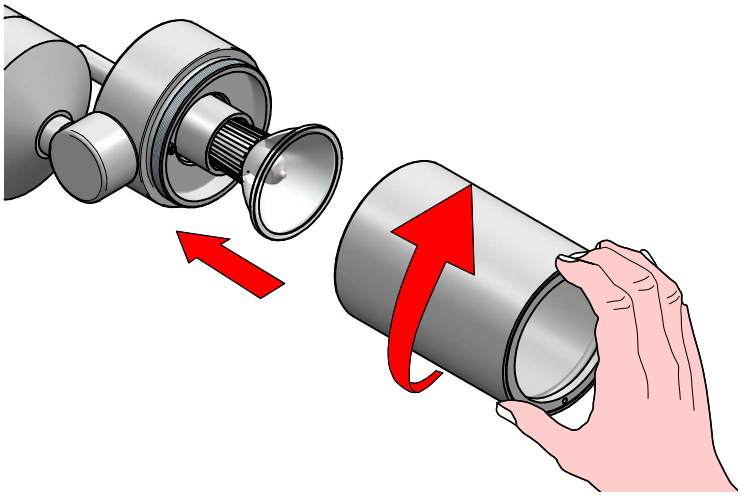

9

