51586
VISION
rev:00

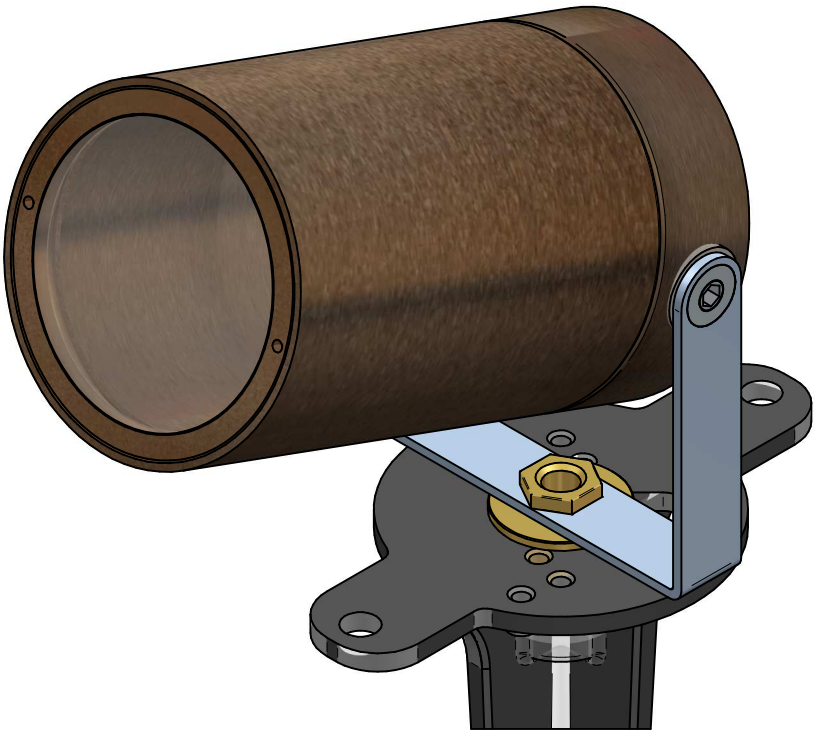

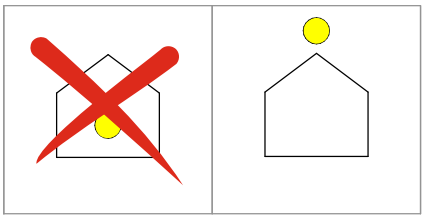

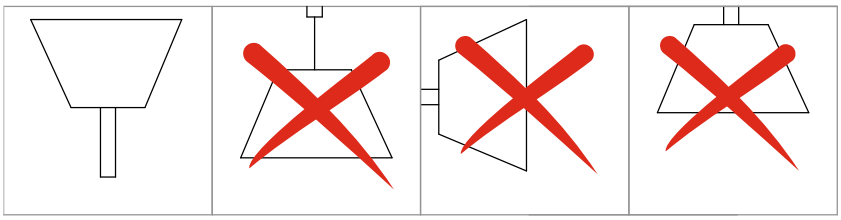

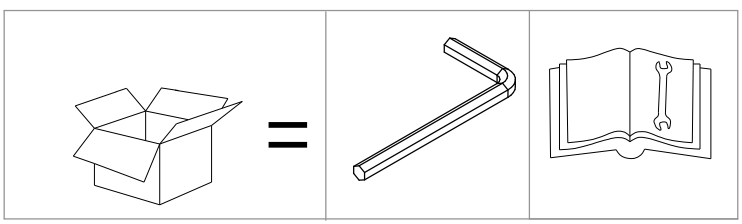

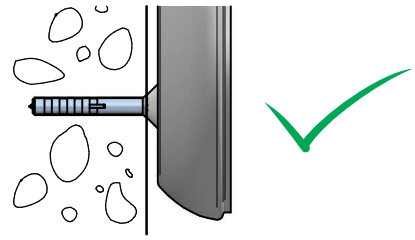

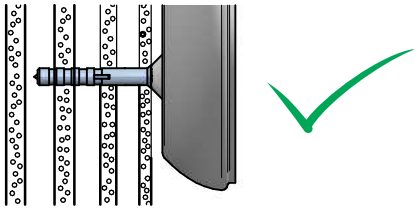

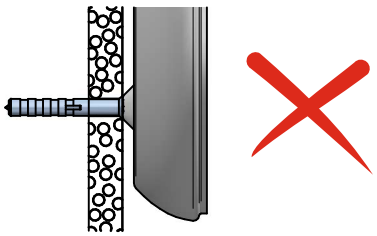

1

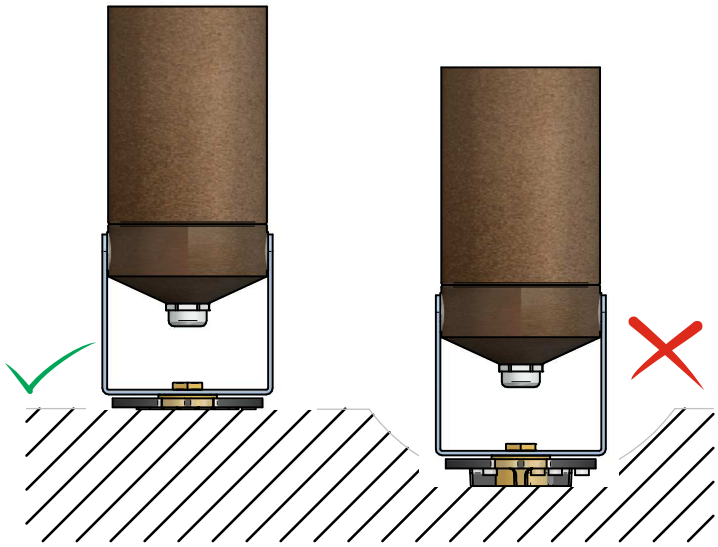

2

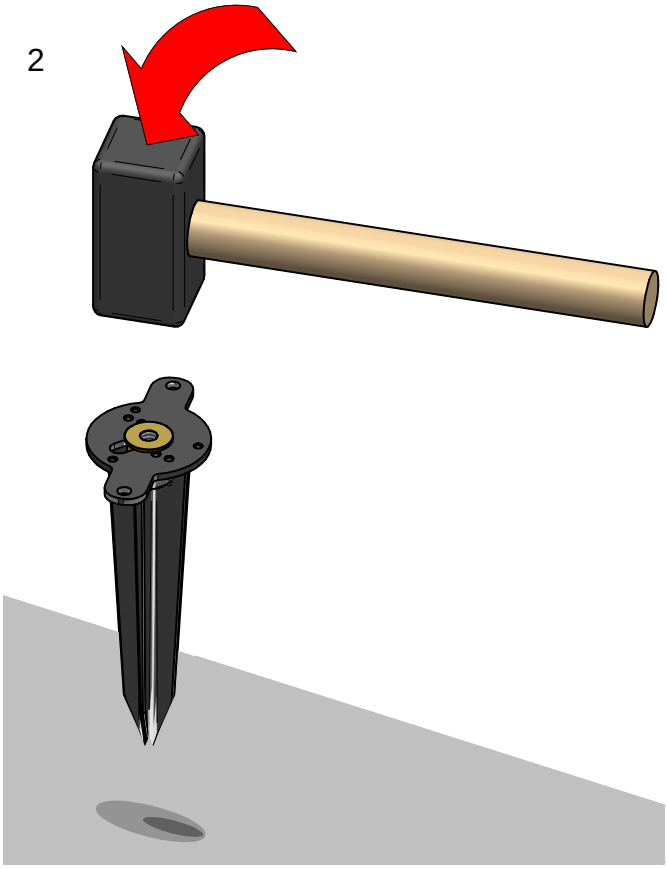

3

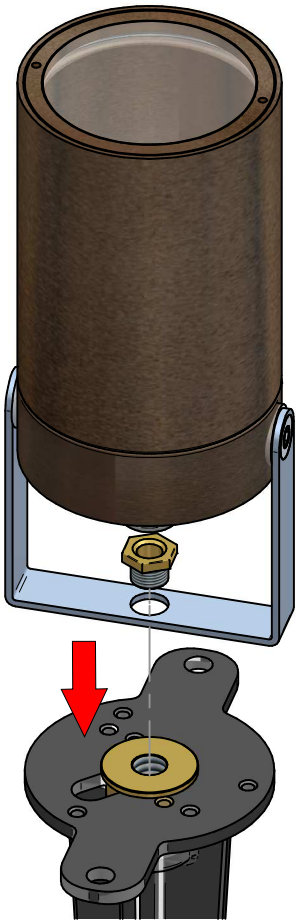

4

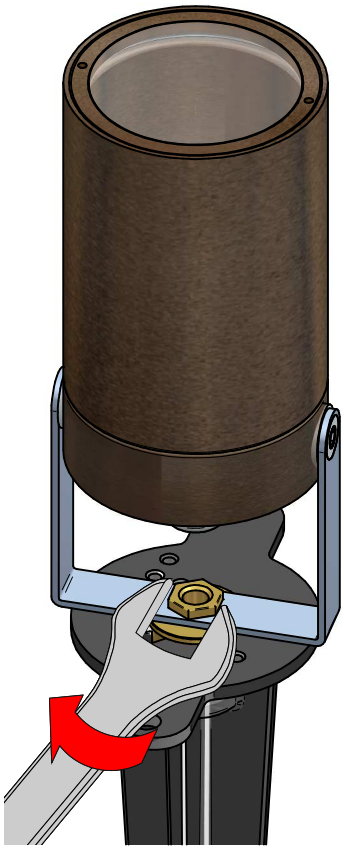

5

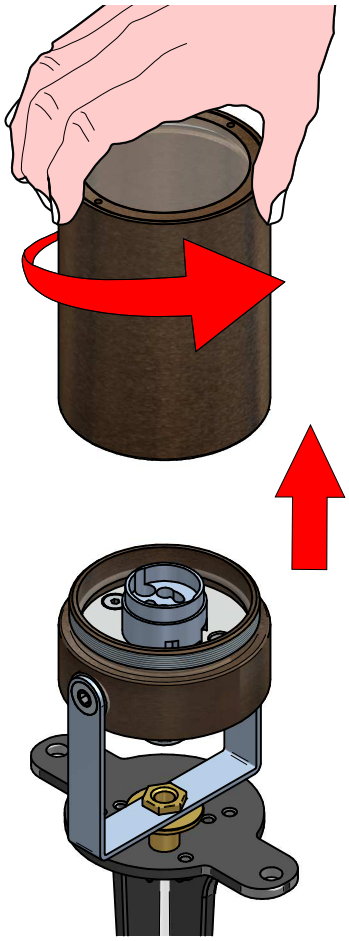

6

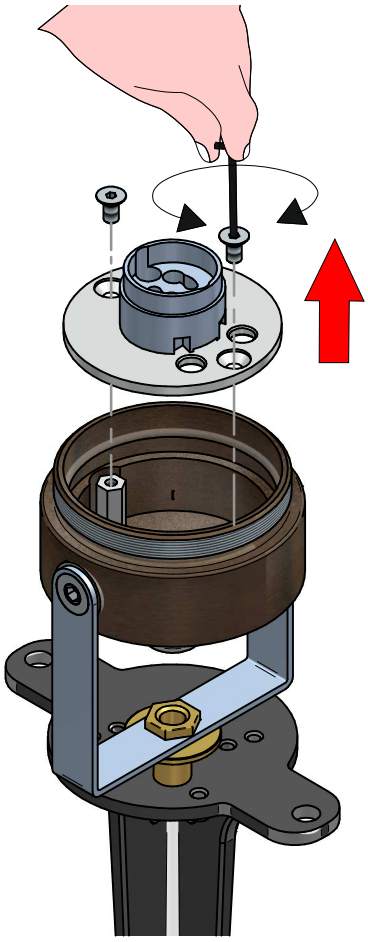

7

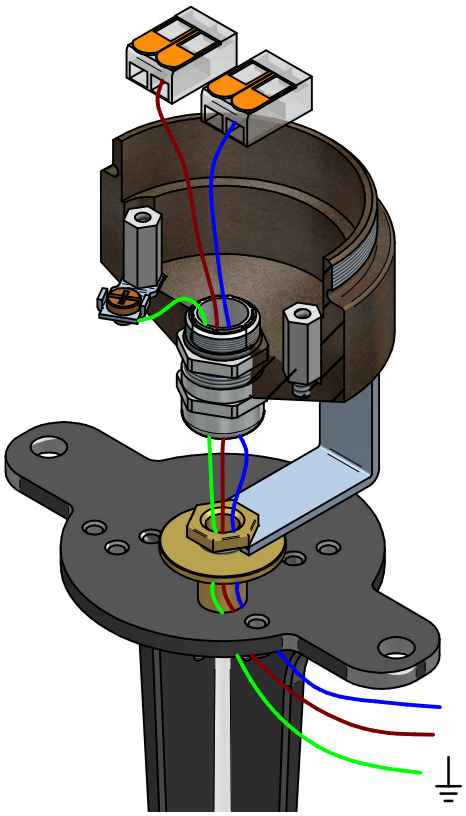

8

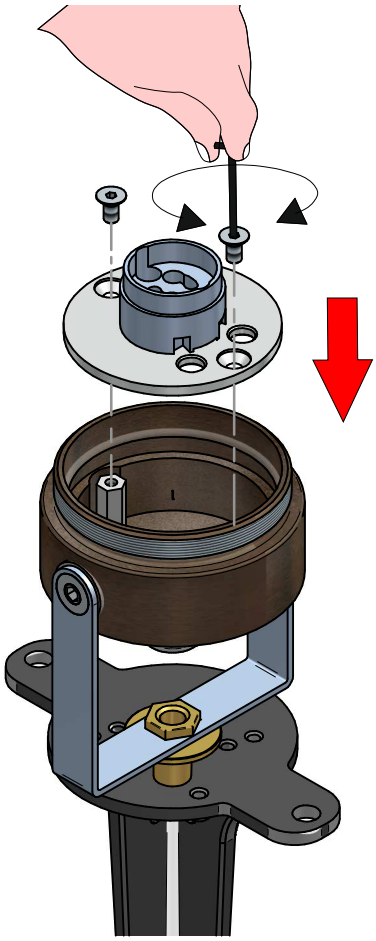

9

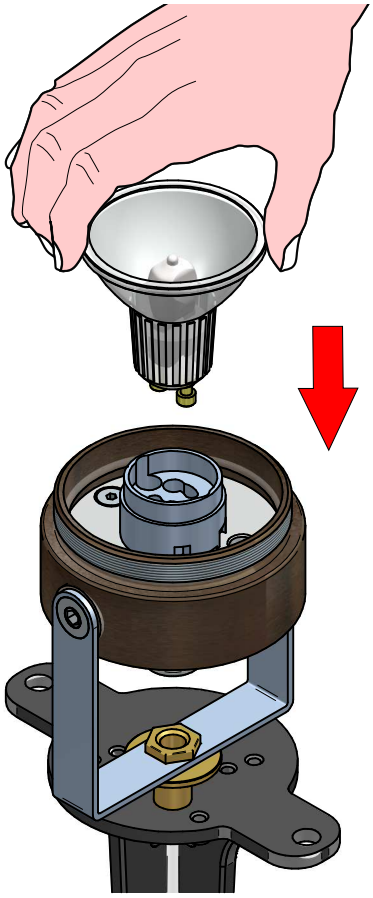

10

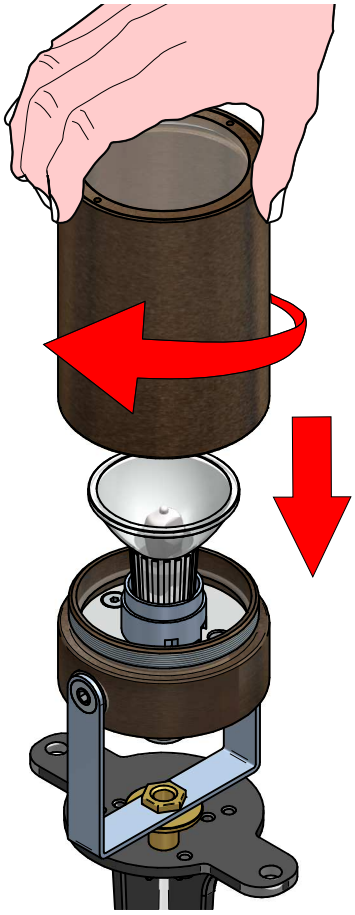

11

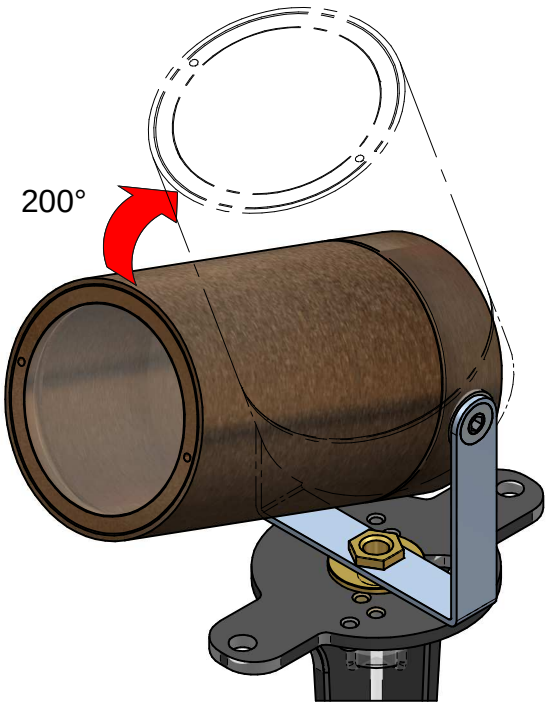

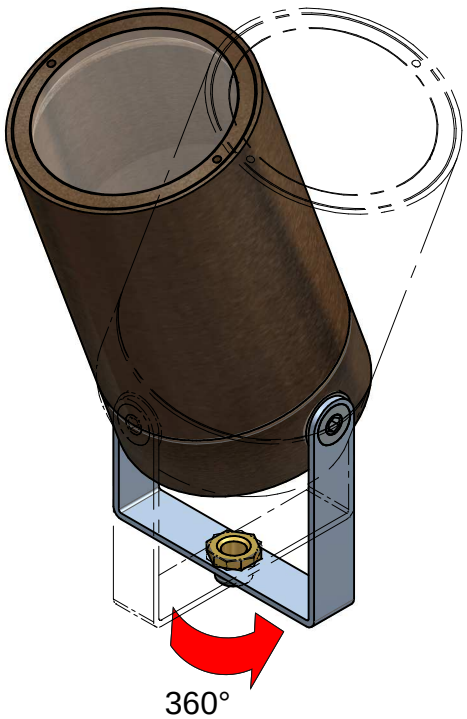

51585
VISION
rev:00

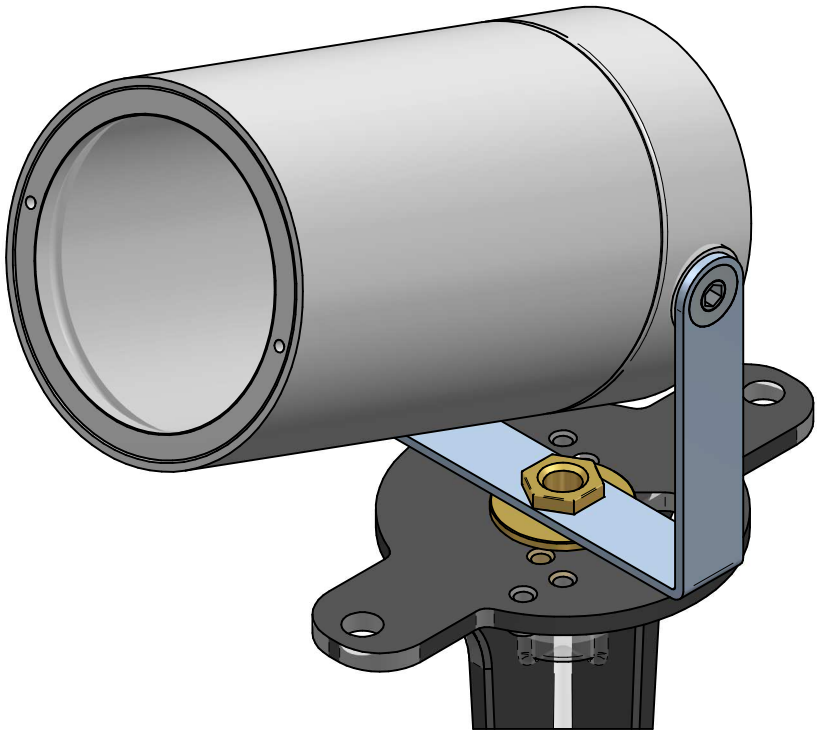

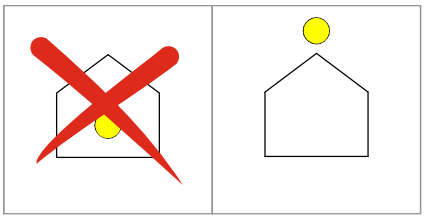

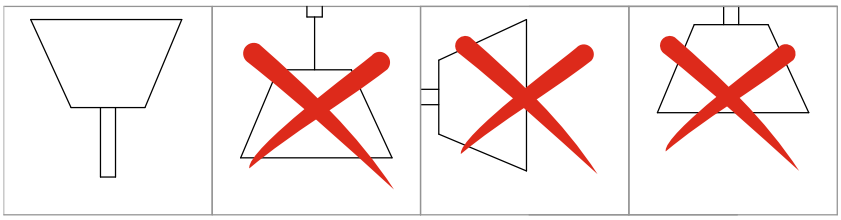

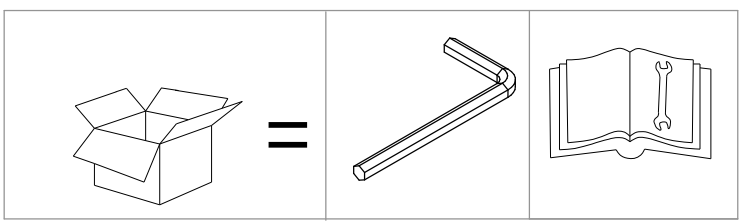

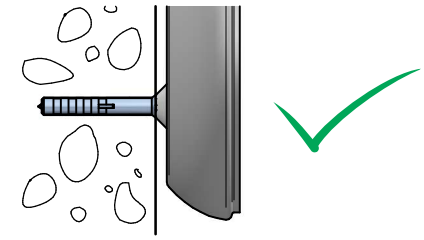

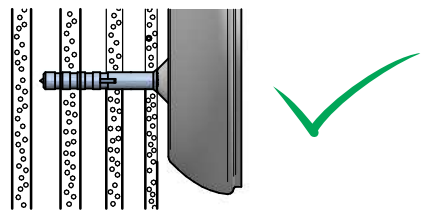

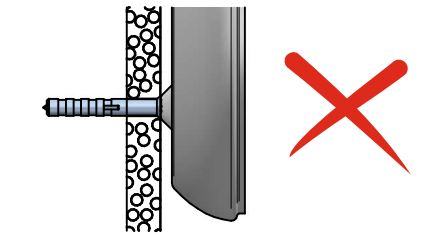

51585
VISION
rev:00

1

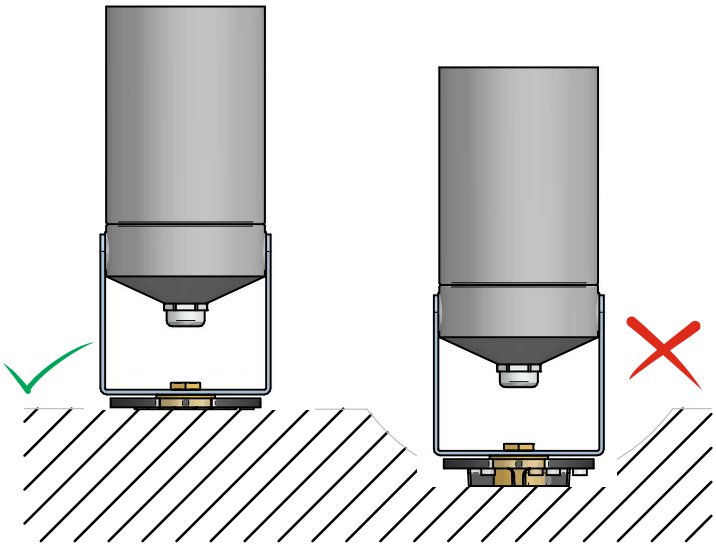

2

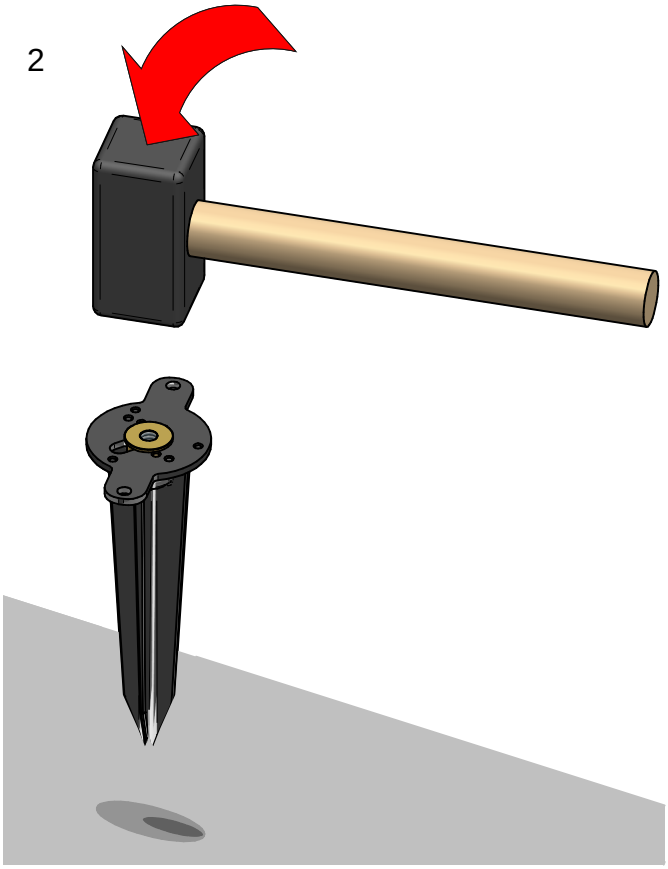

3

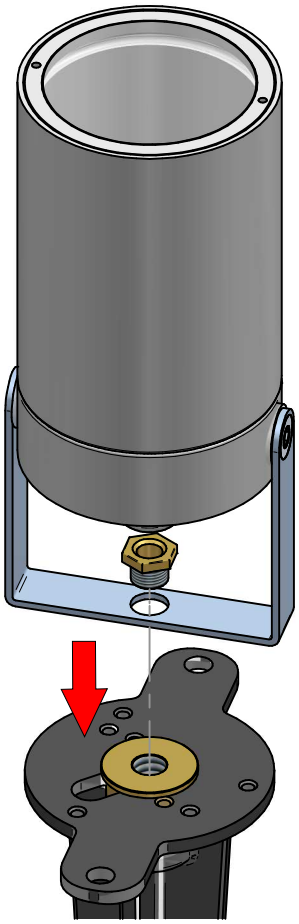

4

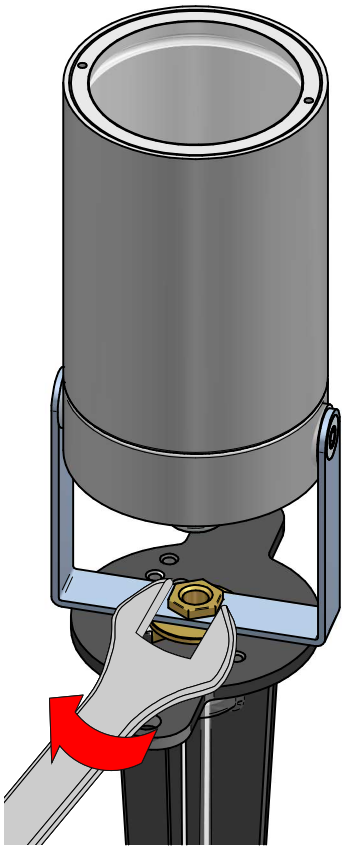

5

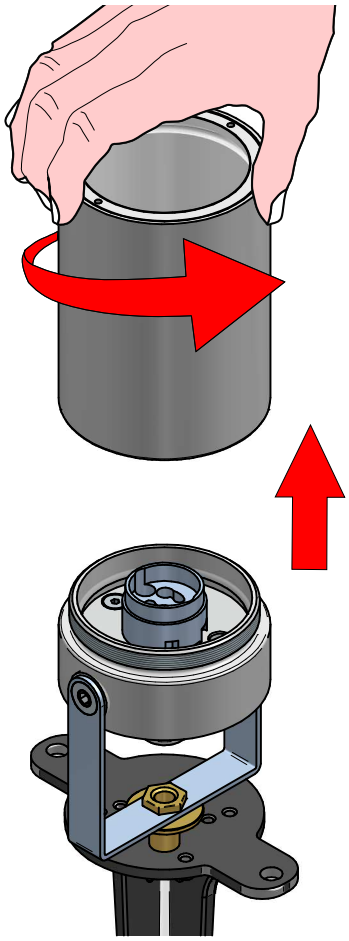

6

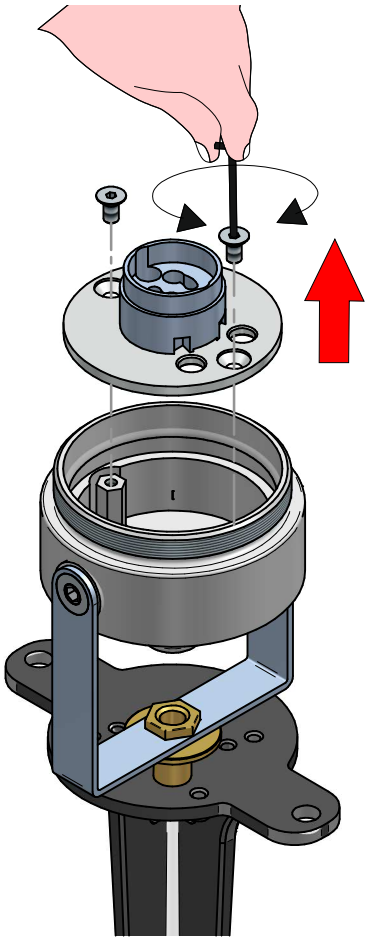

7

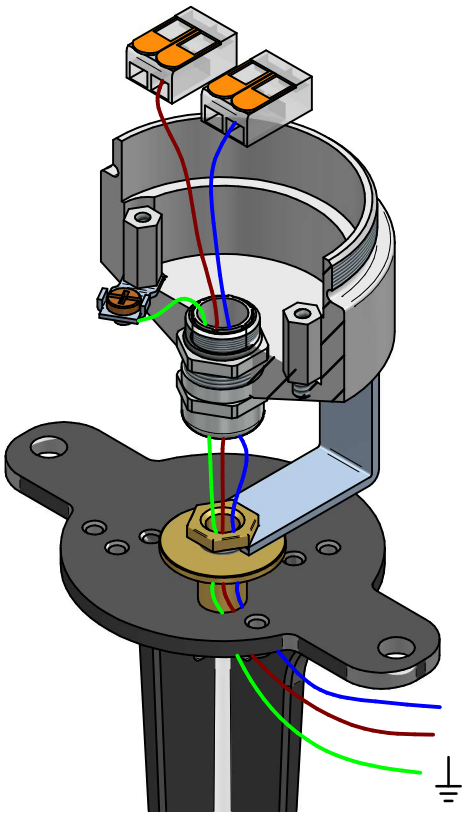

8

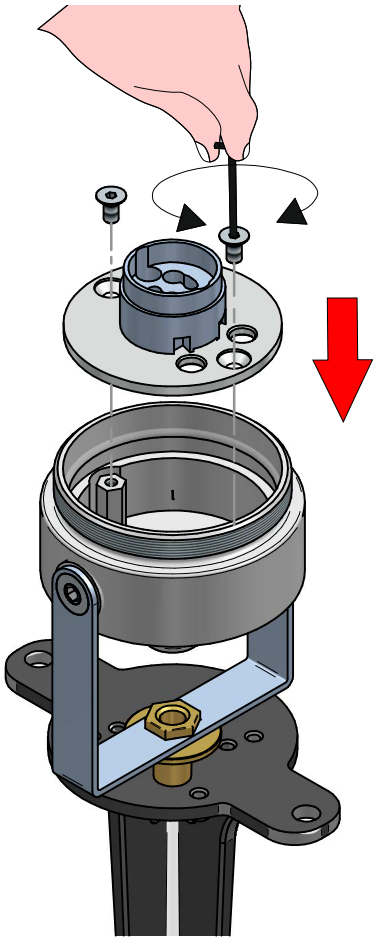

9

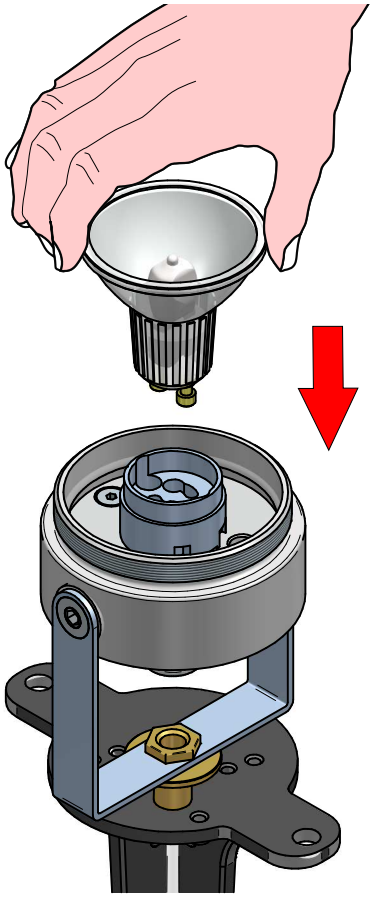

10

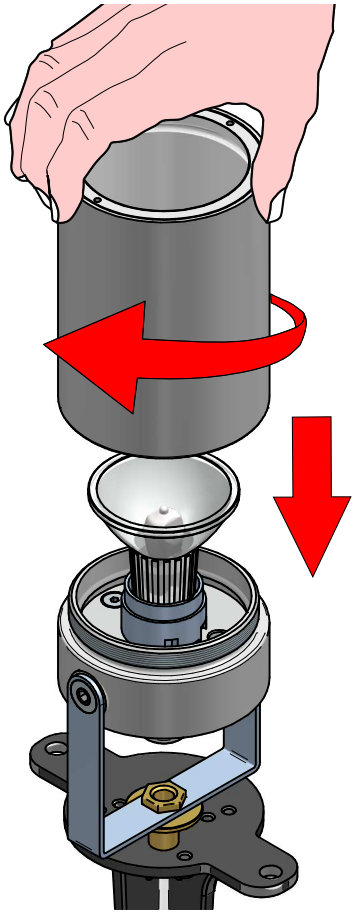

11

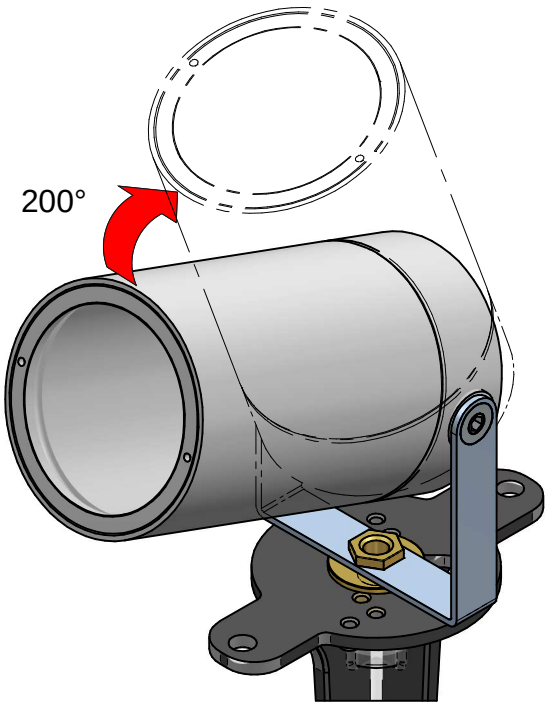

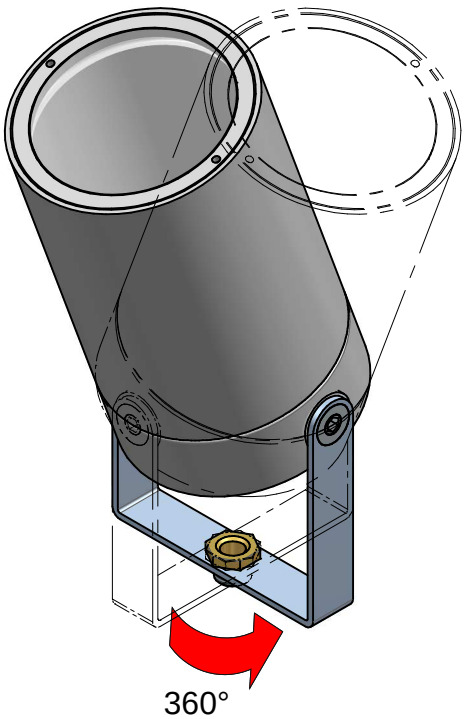

51395
VISION
rev: 00

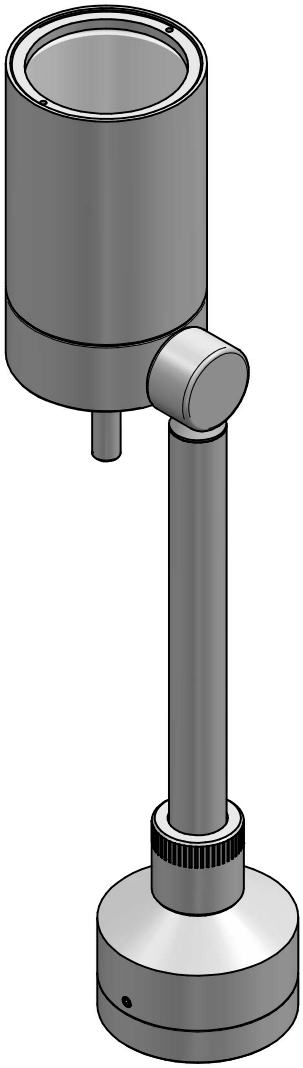

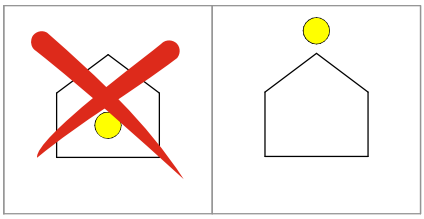

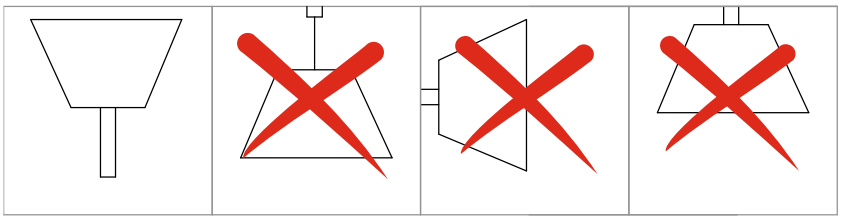

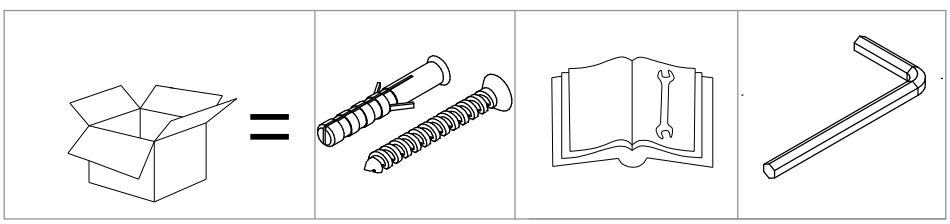

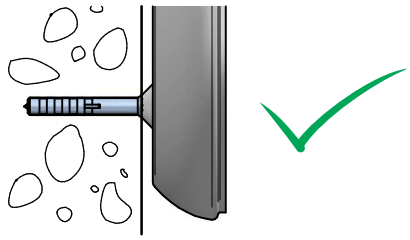

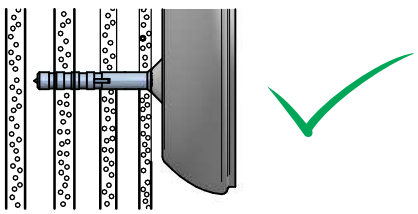

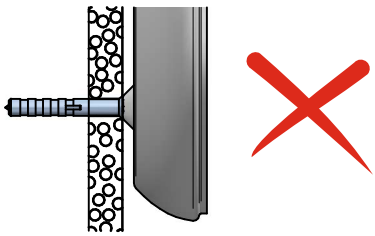

1

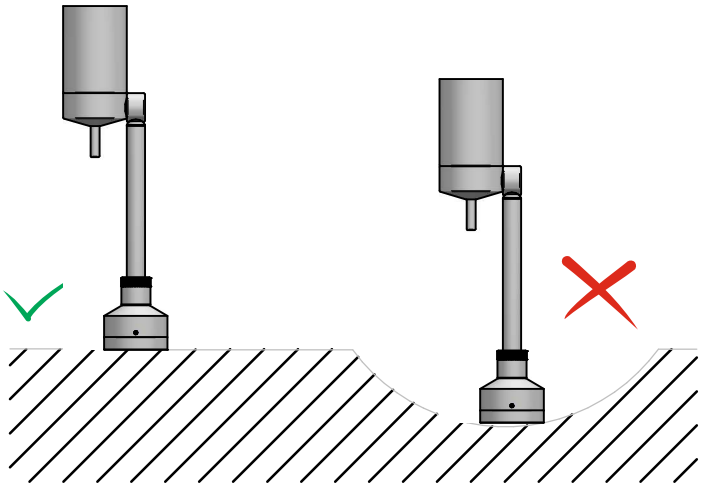

2

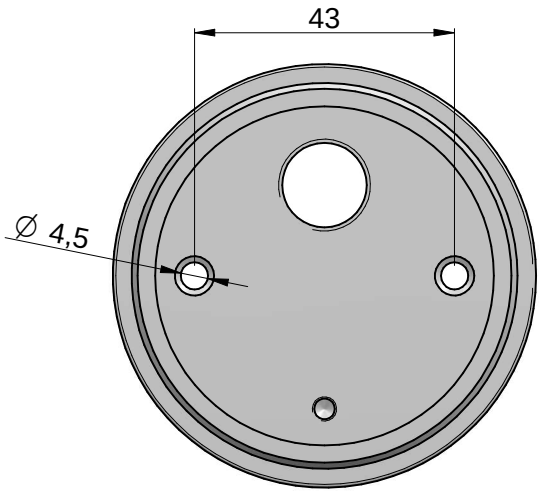

3

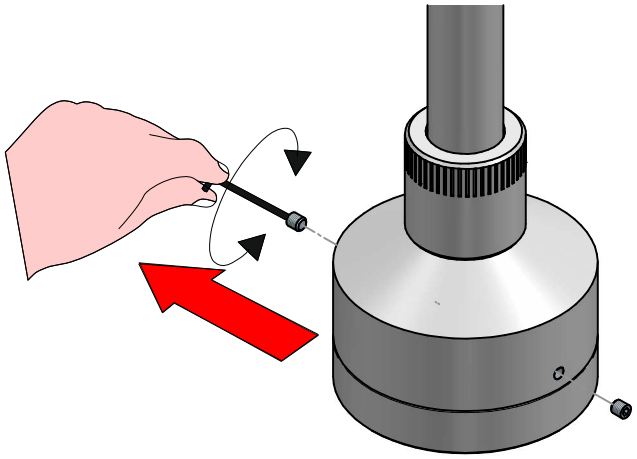

4

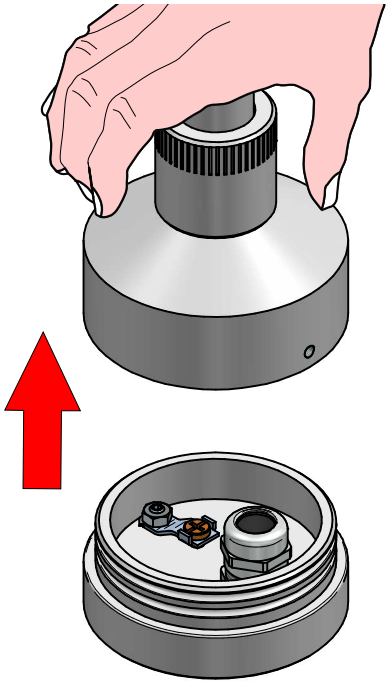

5

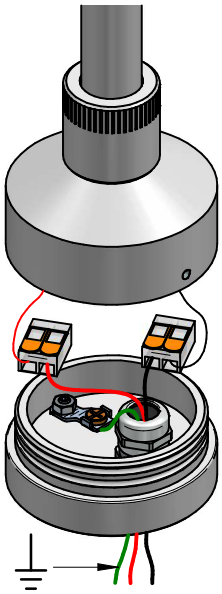

6

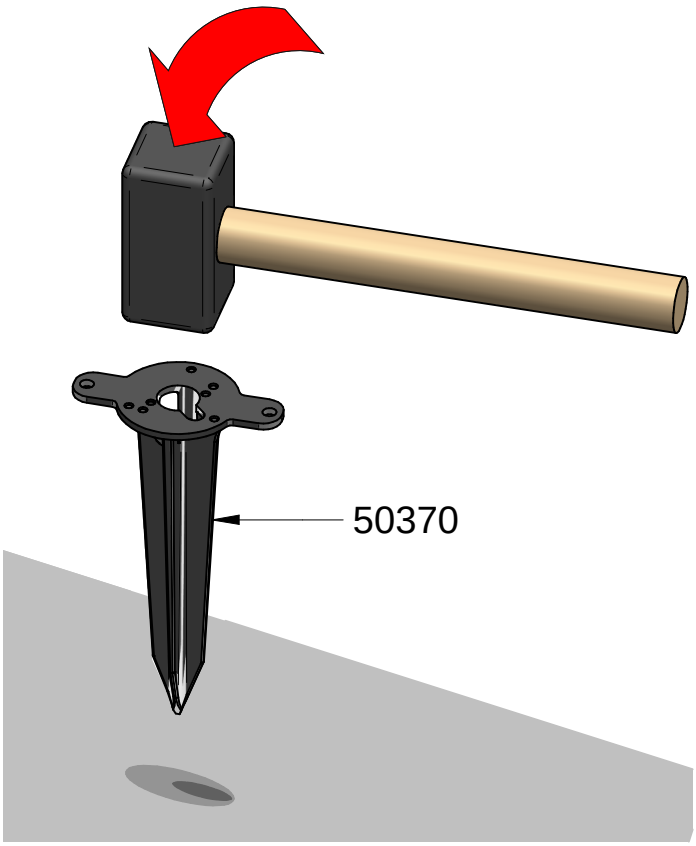

7

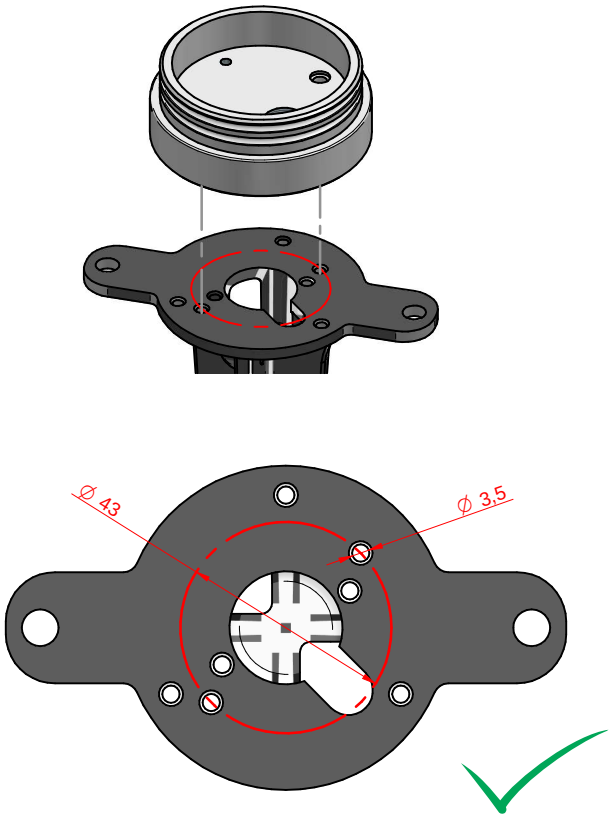

8

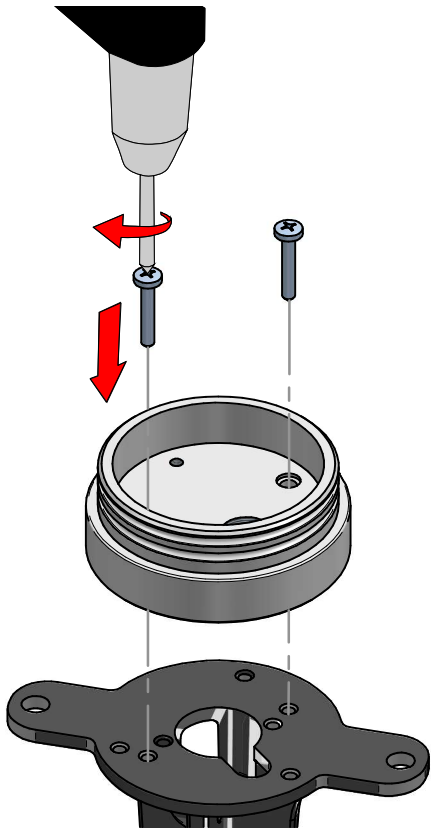

9

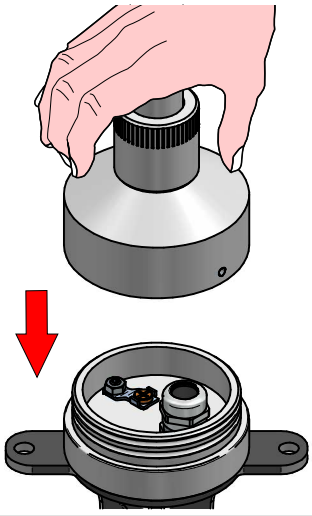

10

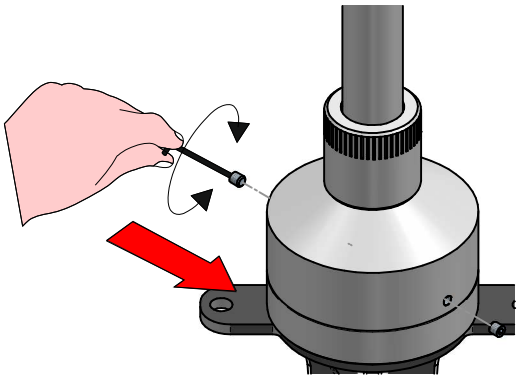

11

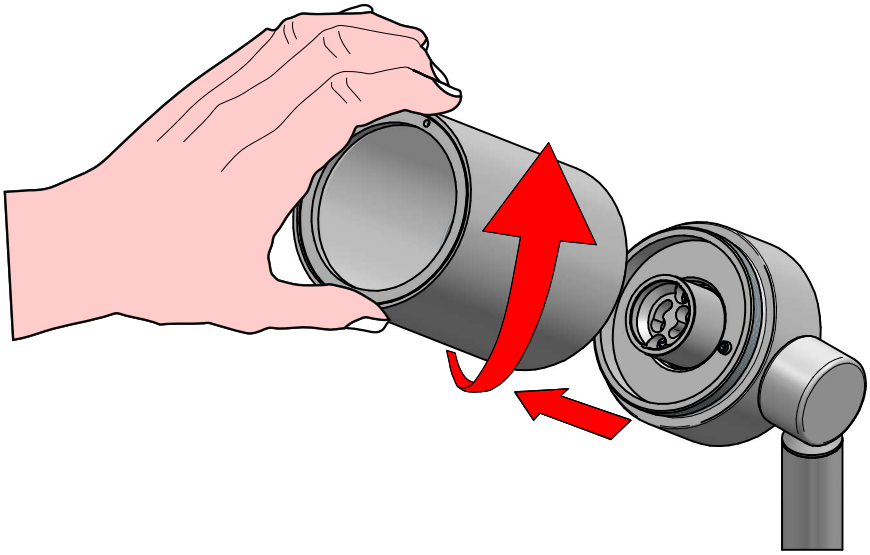

12

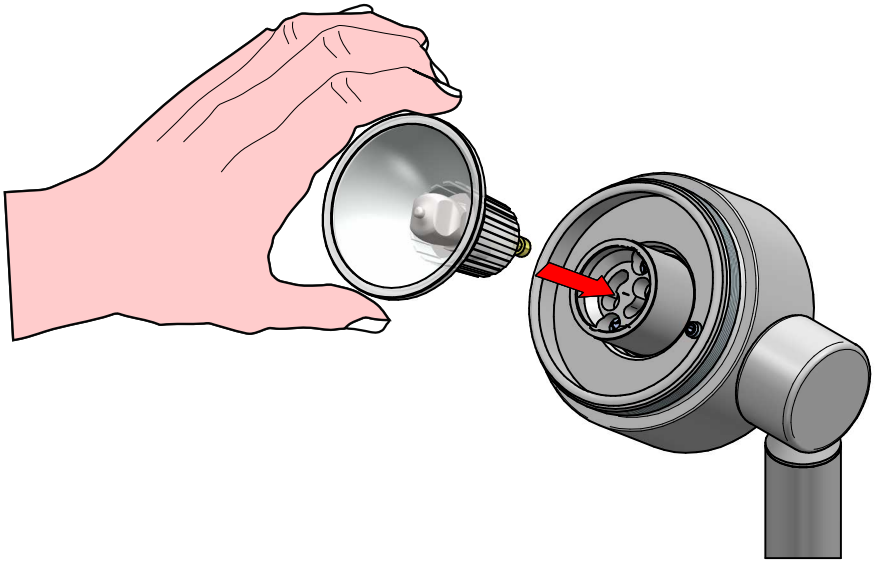

13

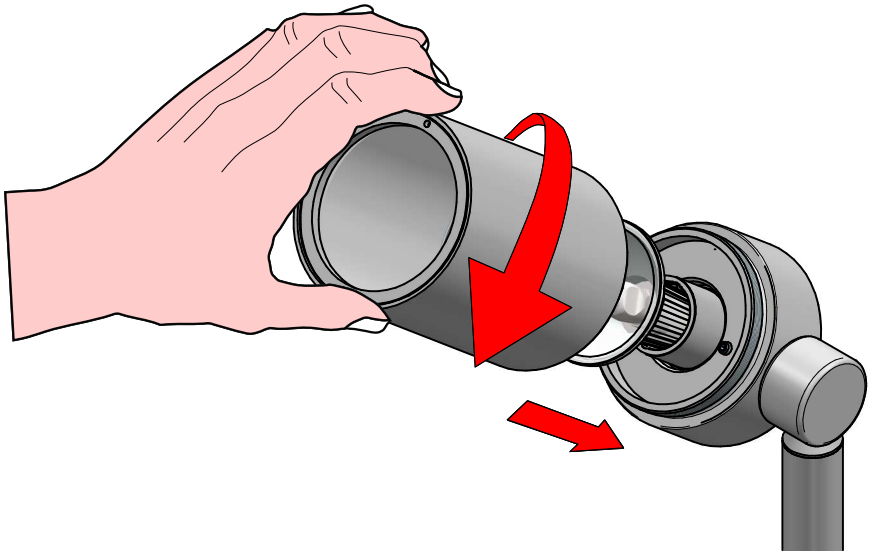

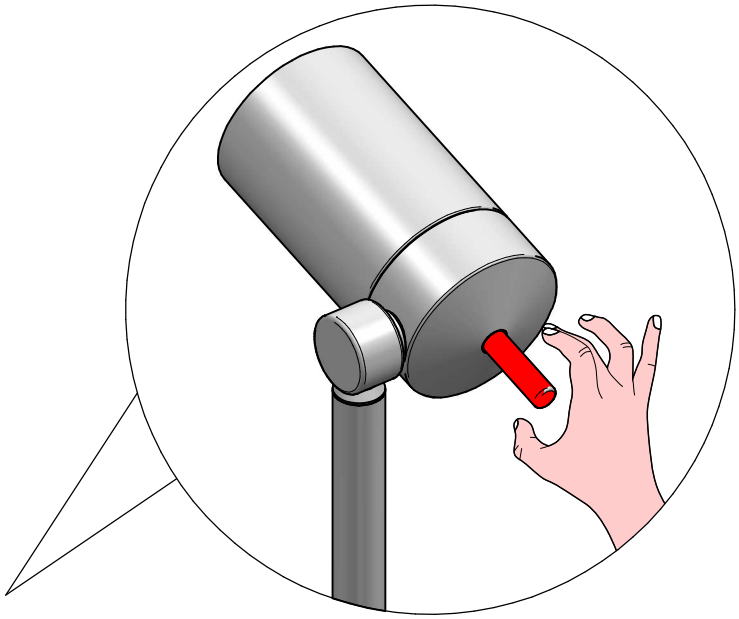

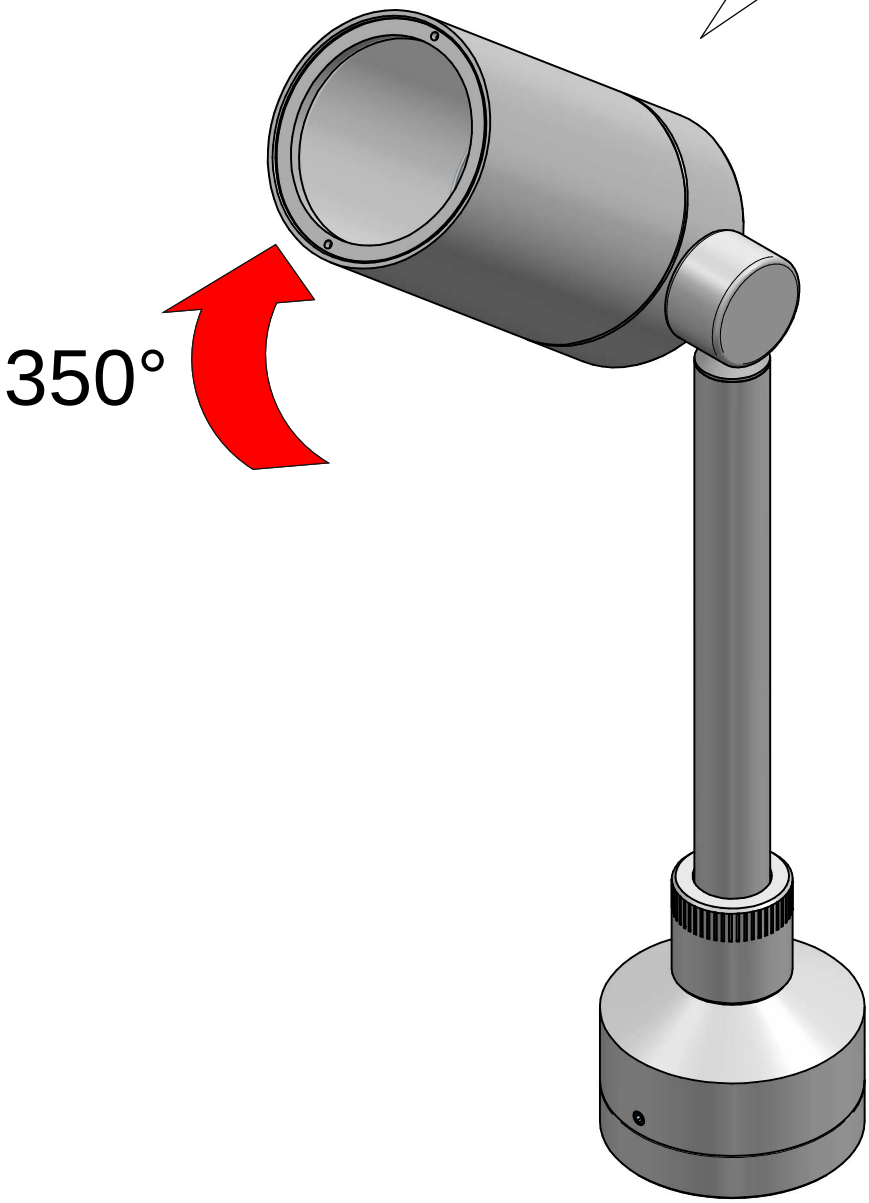
350°

51396
VISION
rev: 00

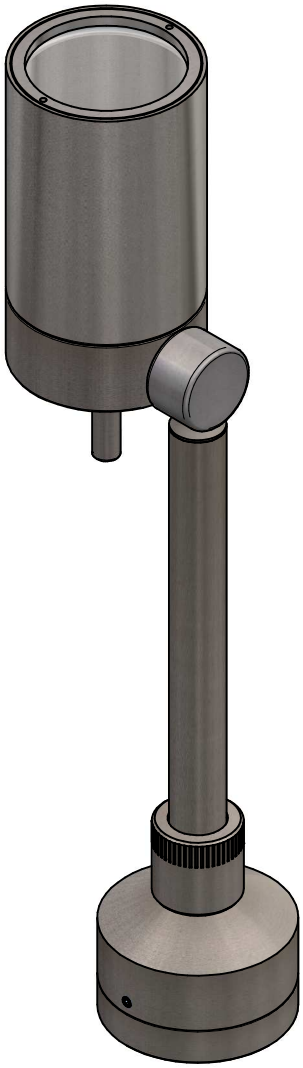

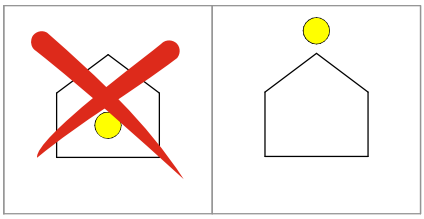

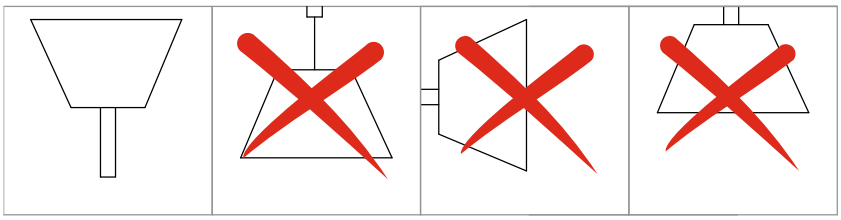

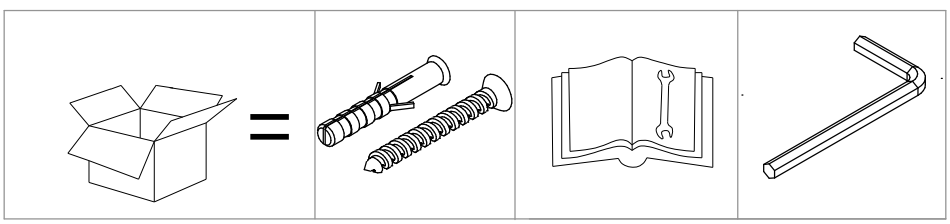

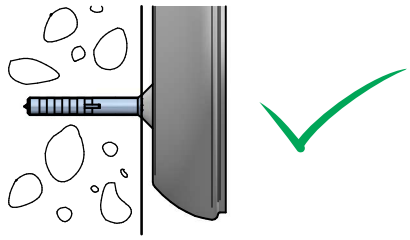

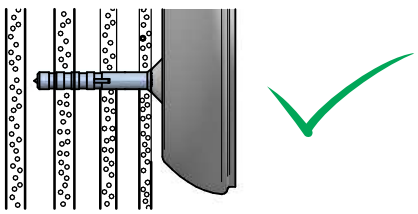

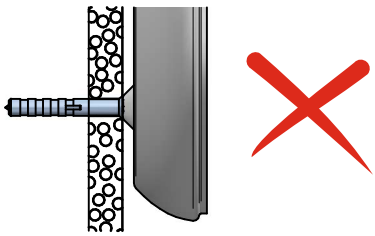

1

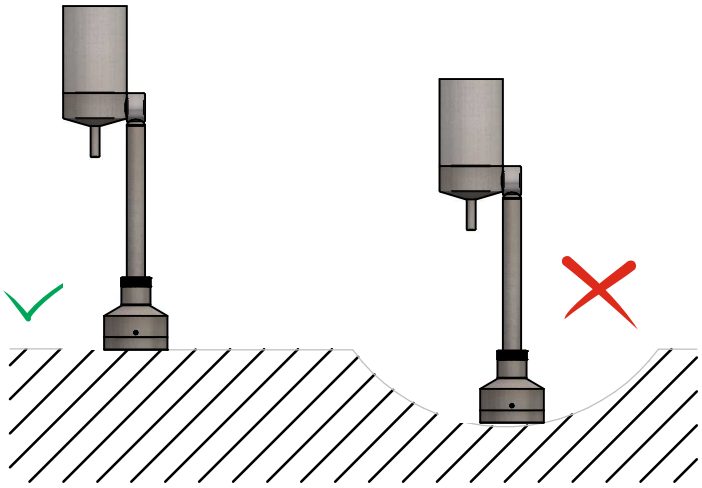

2

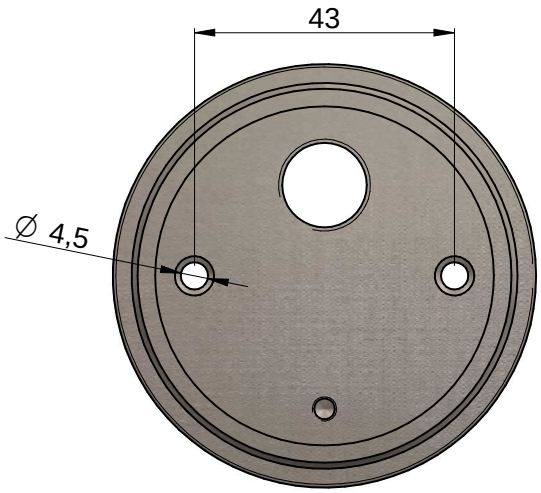

3

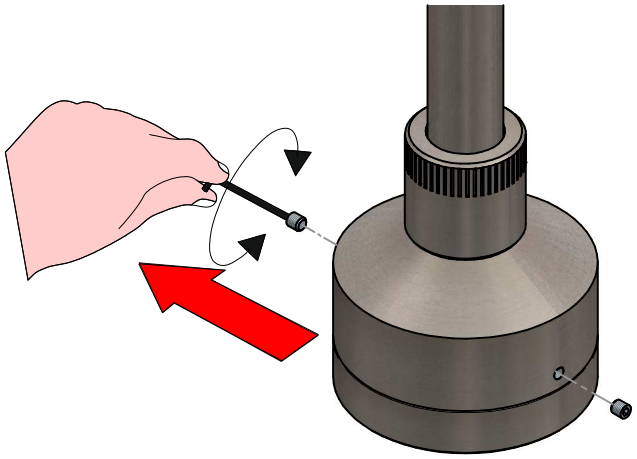

4

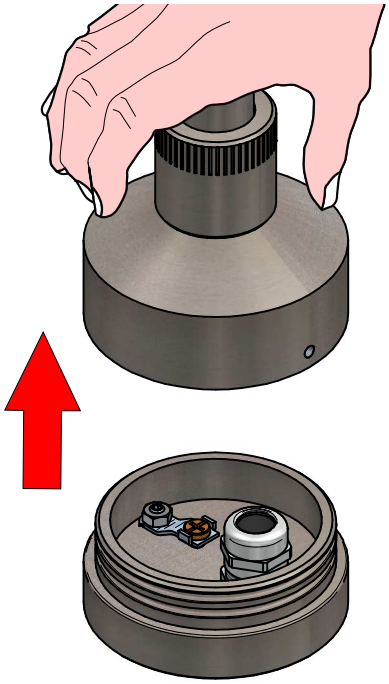

5

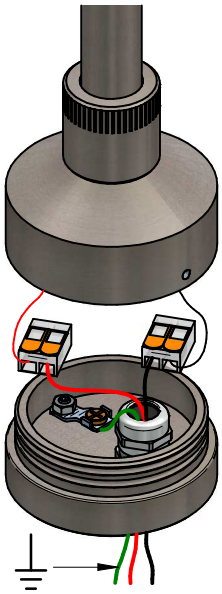

6

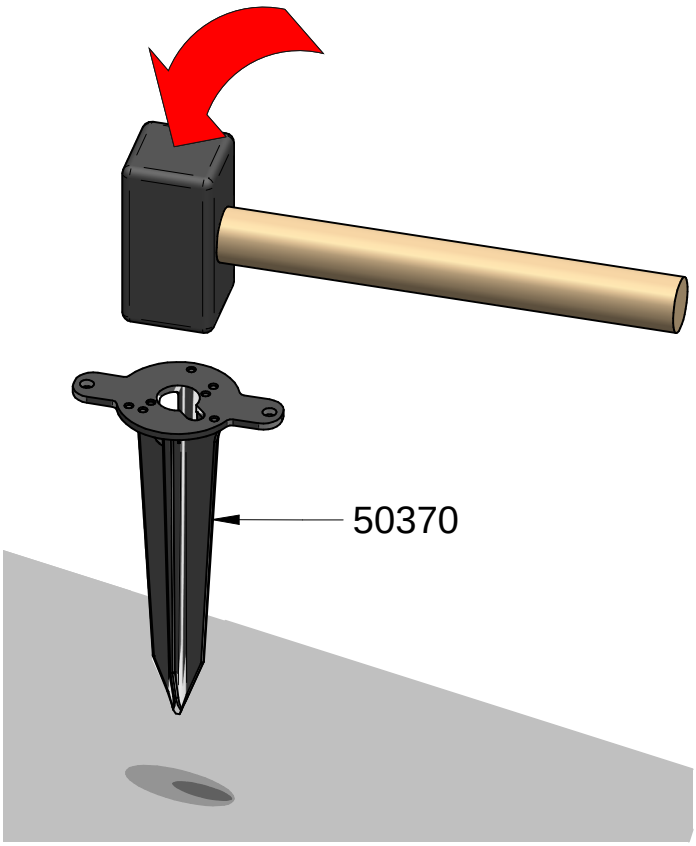

7

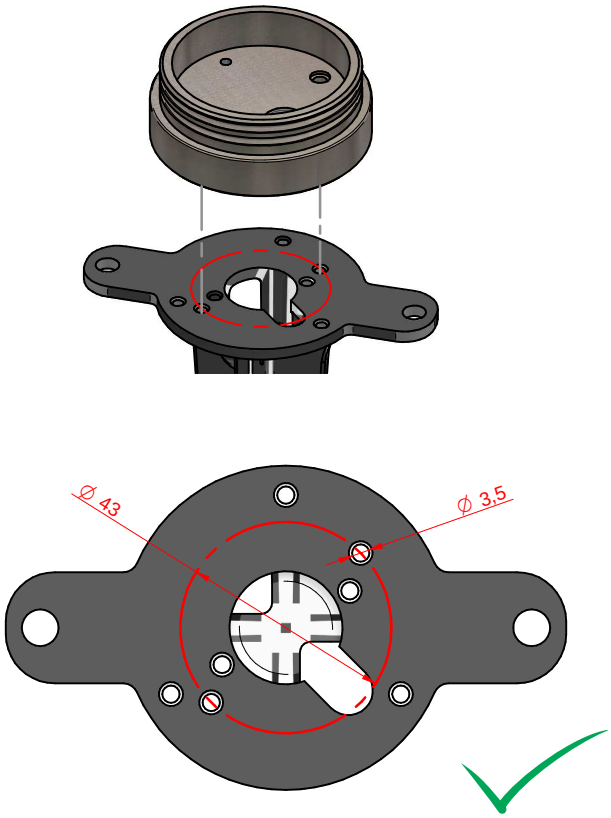

8

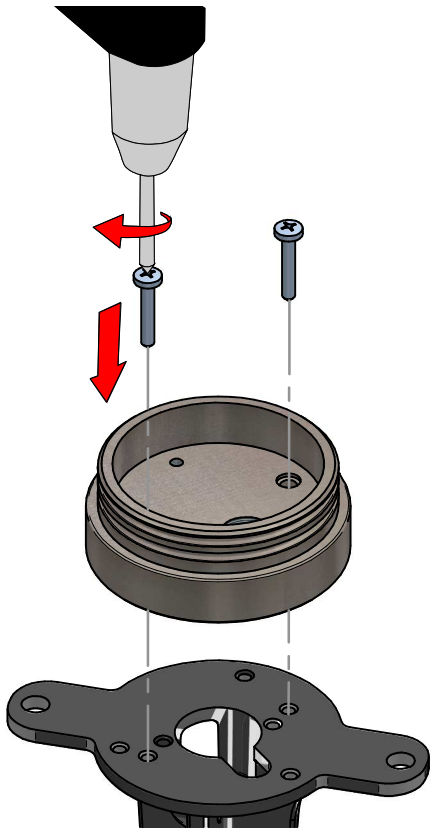

9

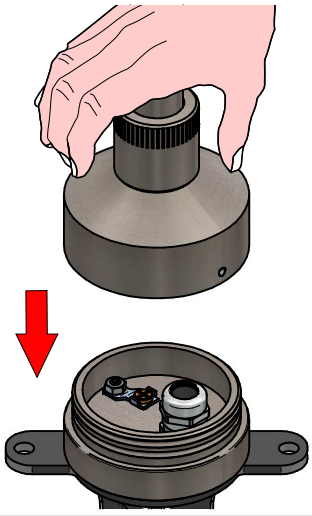

10

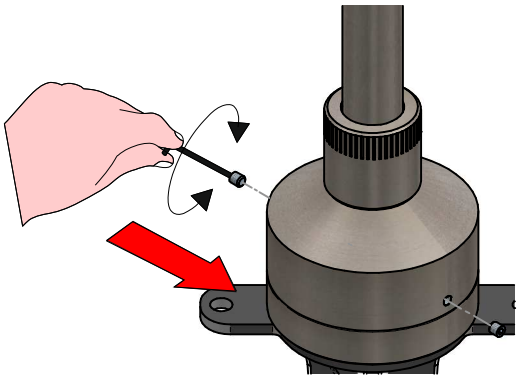

11

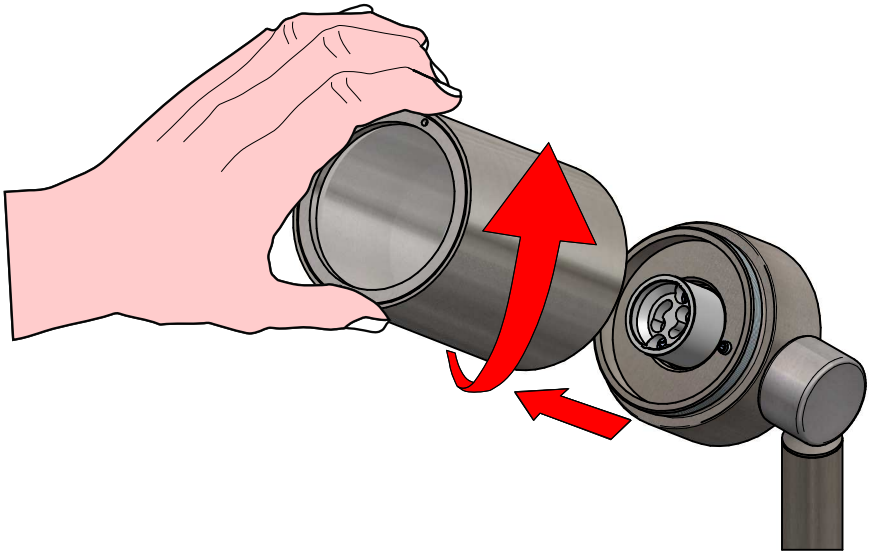

12

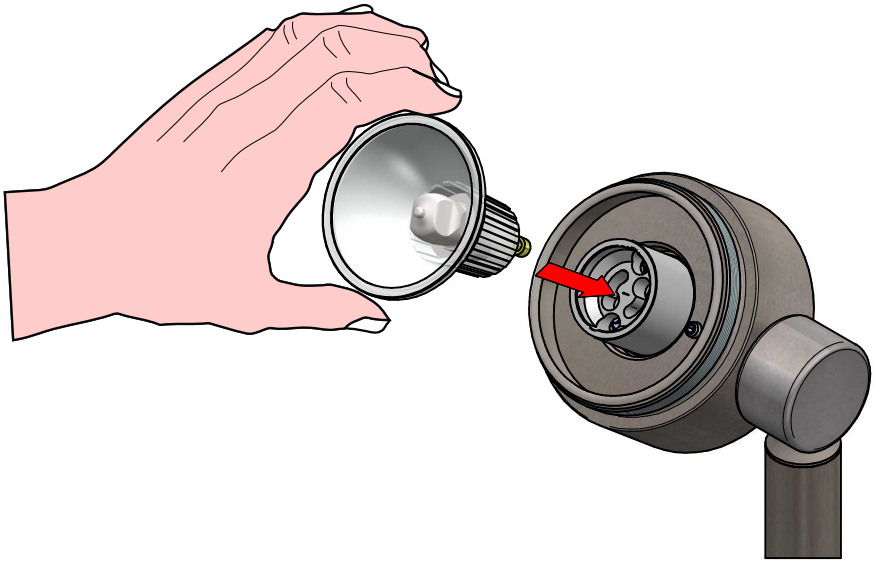

13

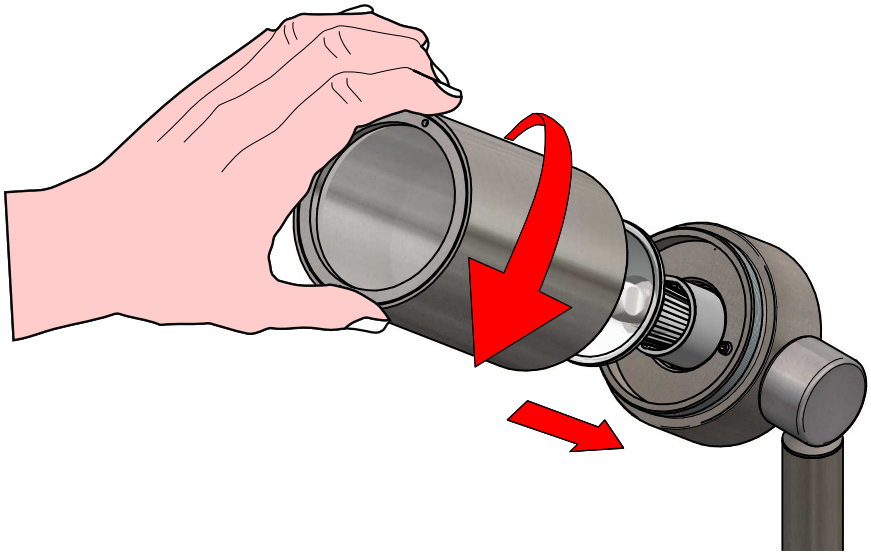

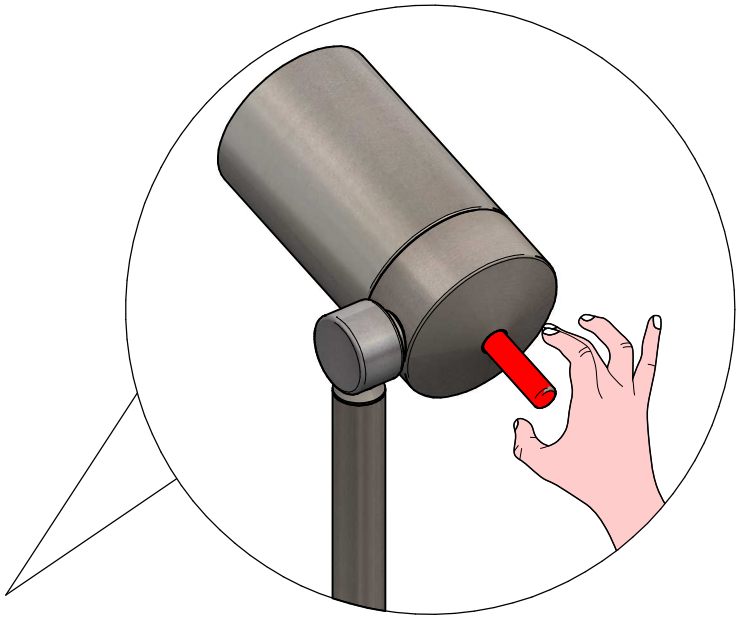

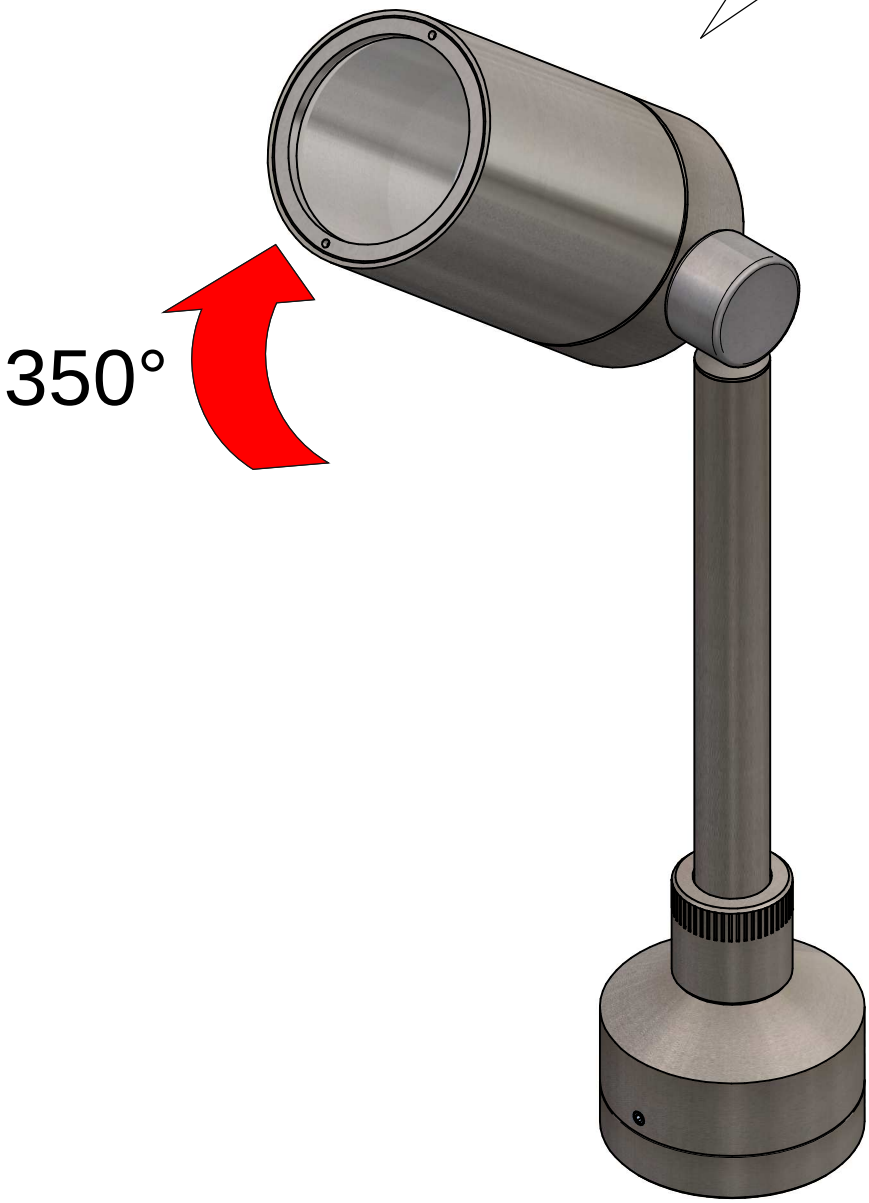
350°