9170-9171-9172
SWITCH PLAF
rev:00

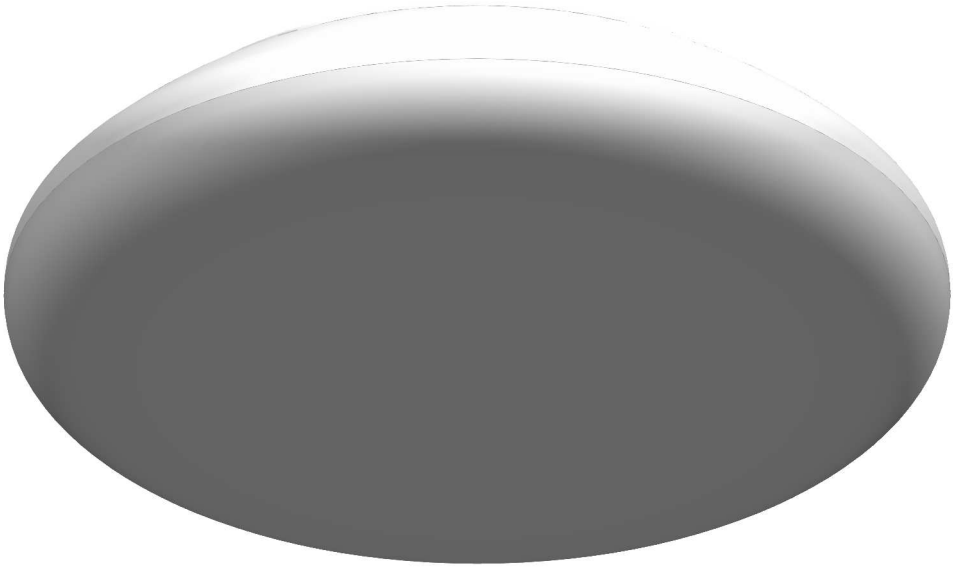

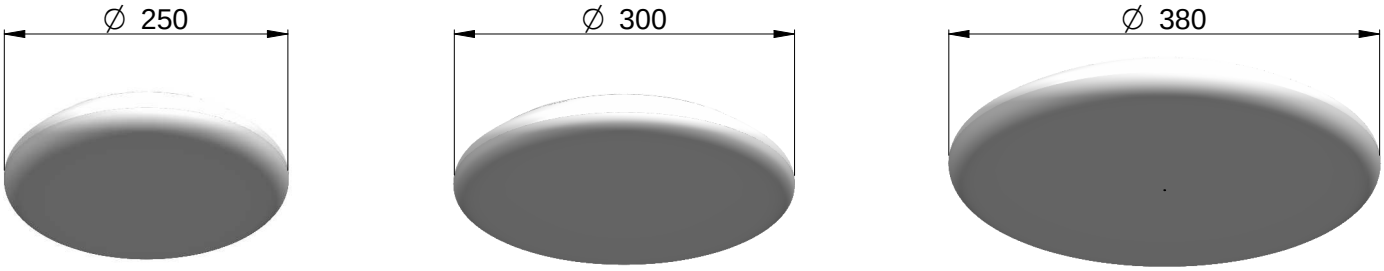

9170 9171 9172

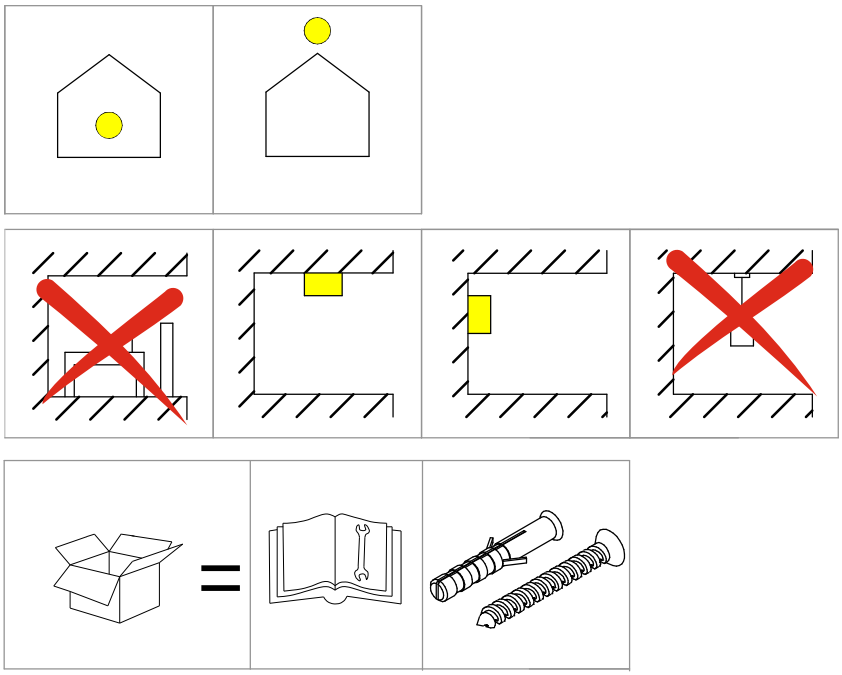

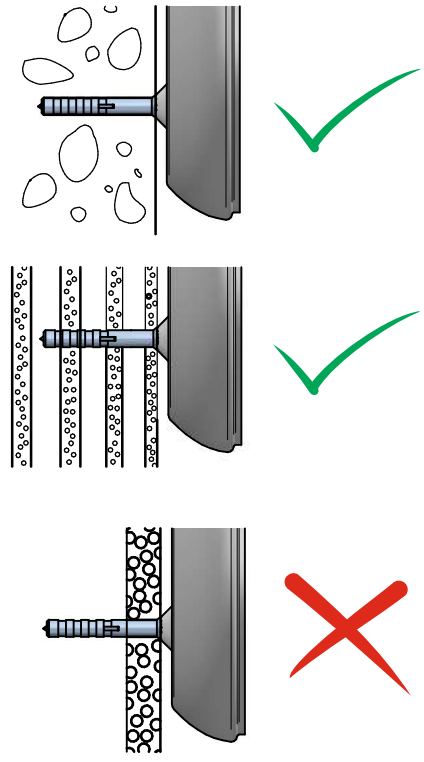

1.1

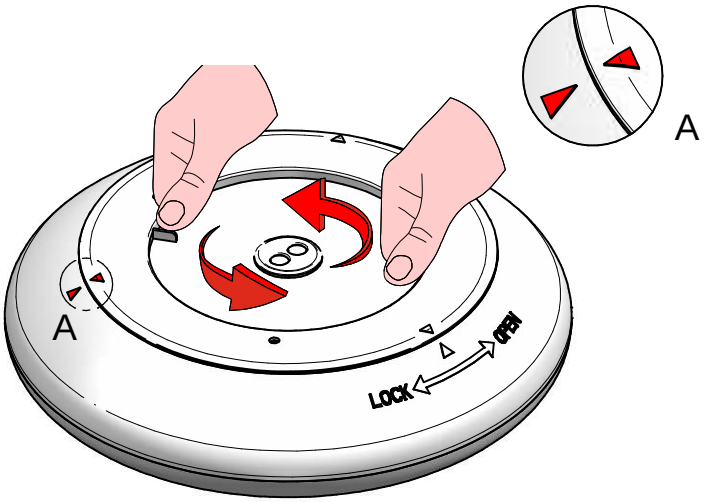

1.2

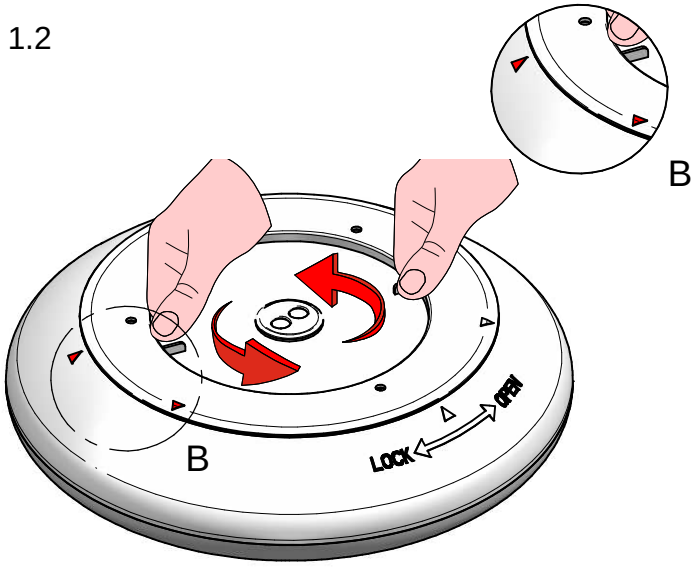

2

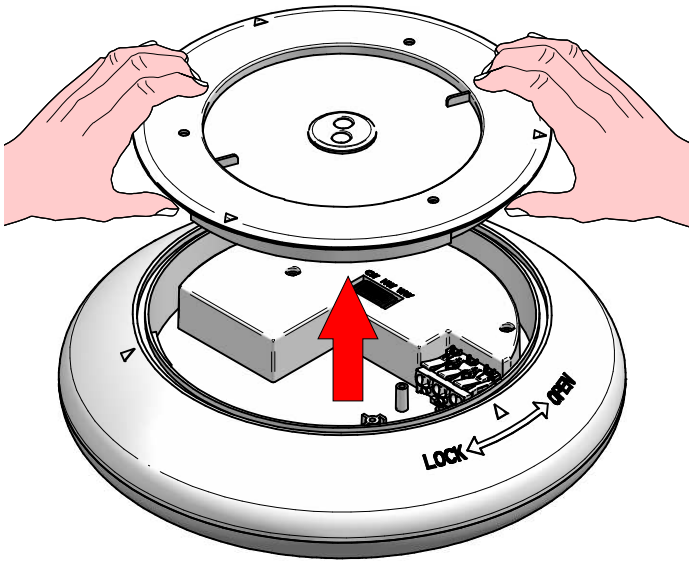

3

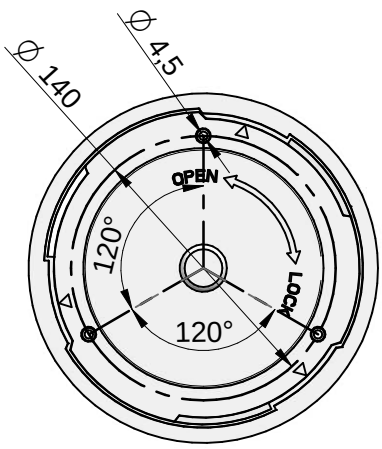

9170

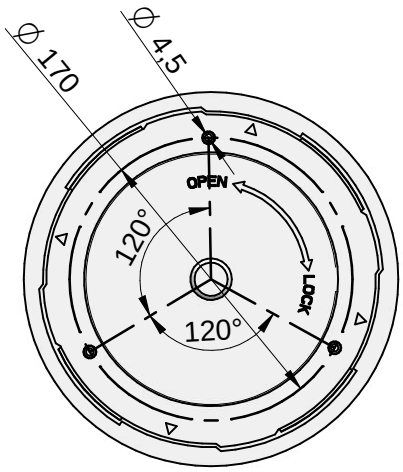

9171

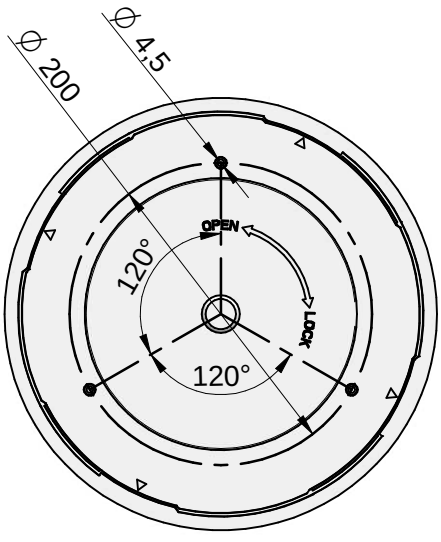

9172

4

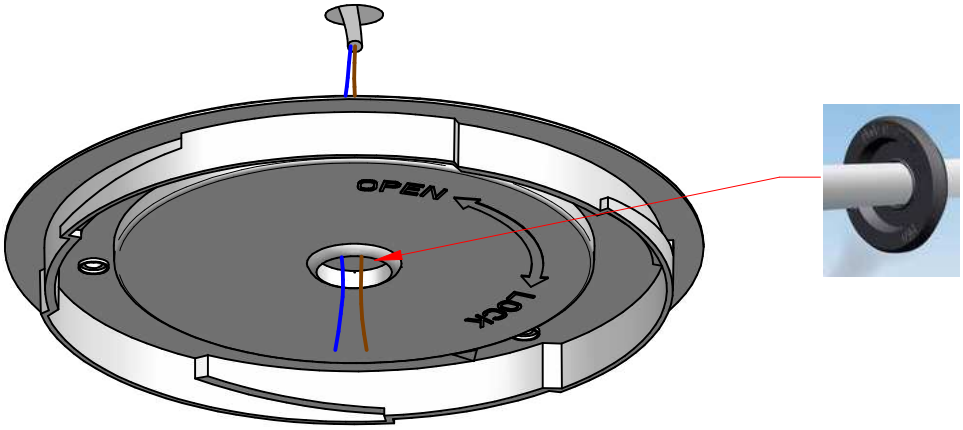
OPEN
LOCK

5

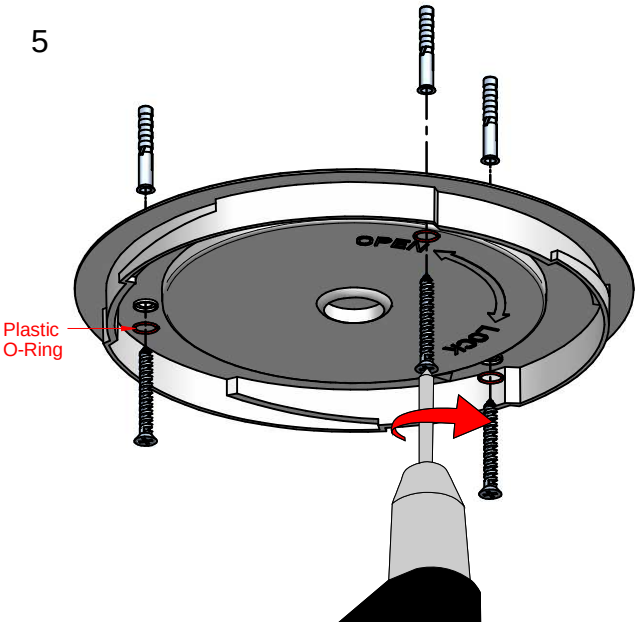
Plastic
O-Ring
OPEN
LOCK

6

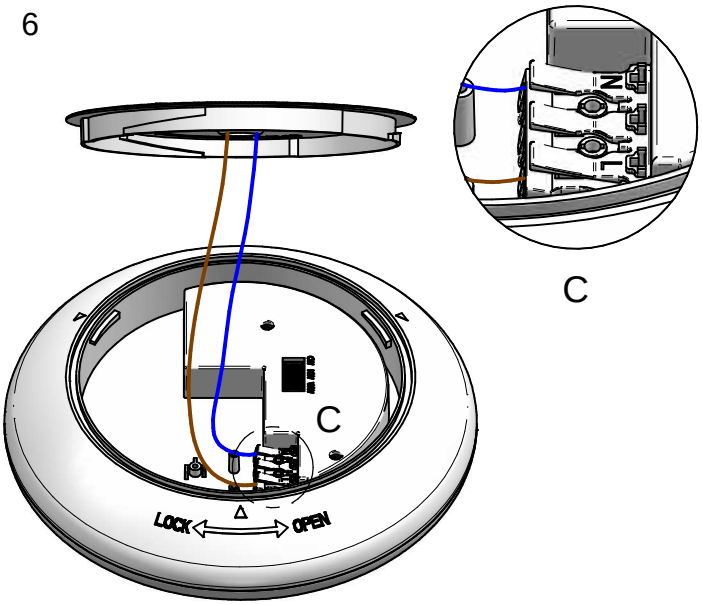
N
L1
C
C
LOCK
OPEN

7

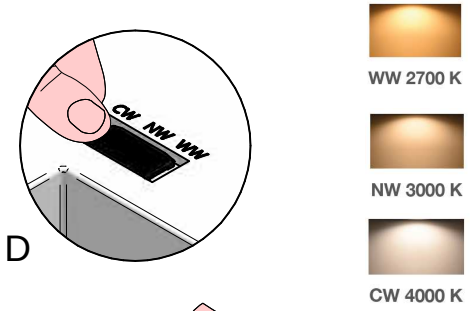
CW NW WW
D
WW 2700 K
NW 3000 K
CW 4000 K

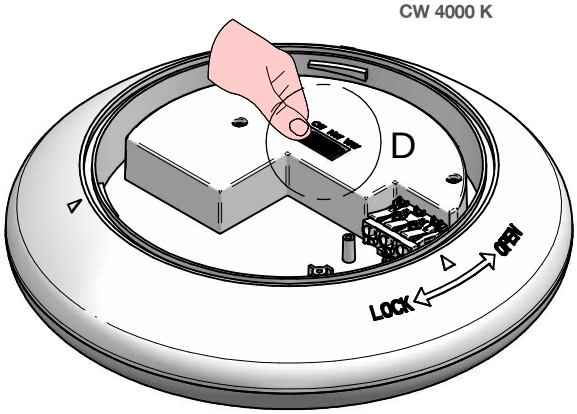
D
LOCK
OPEN

8.1

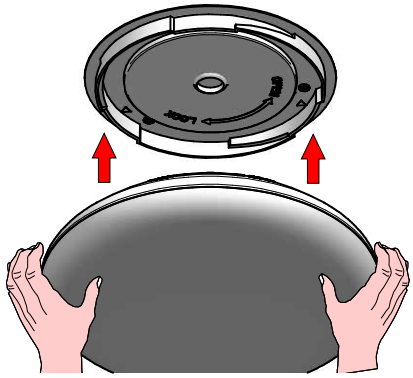

8.2

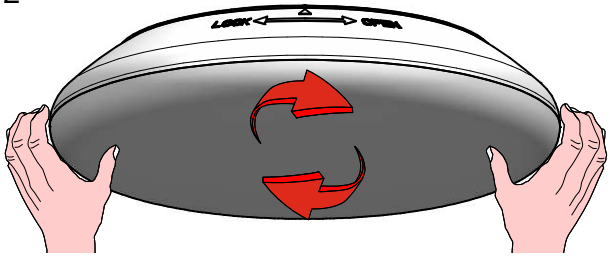
LOCK
OPEN

