FGI00843
PISTILLO
rev:1

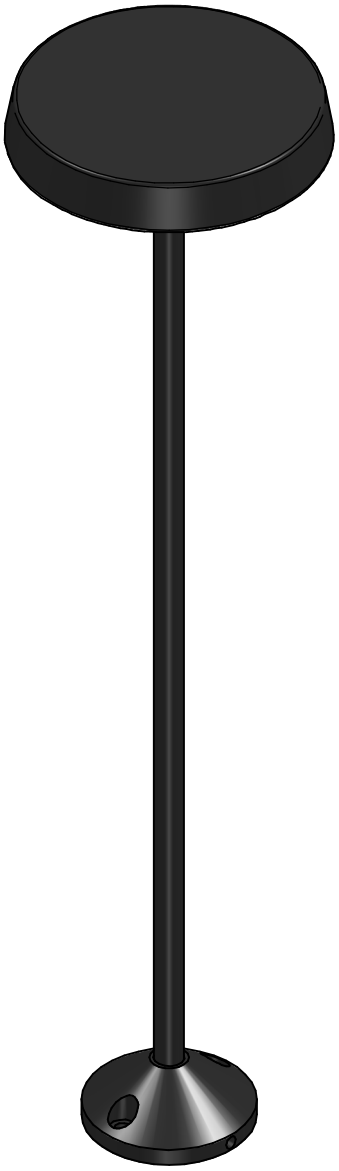

L210
8940 - 8940M
8943 - 8943M
8956 - 8956M

L410
8941 - 8941M
8944 - 8944M
8957 - 8957M

L610
8942 - 8942M
8945 - 8945M
8958 - 8958M

L900
8946 - 8946M
8947 - 8947M
8965 - 8965M

L1200
8948 - 8948M
8949 - 8949M
8970 - 8970M

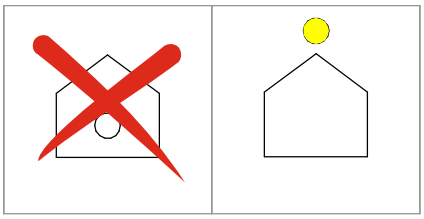

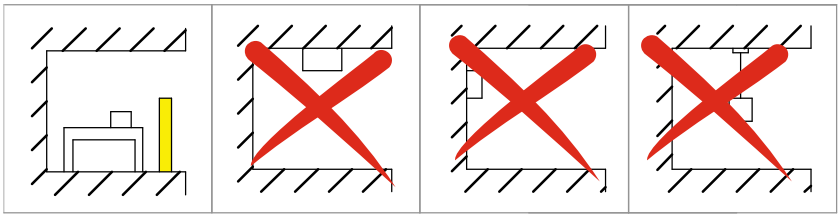

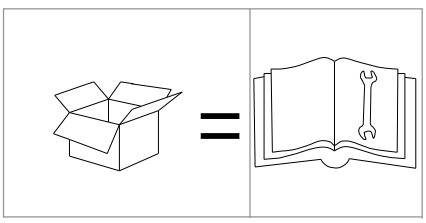

FGI00843
PISTILLO
rev:1

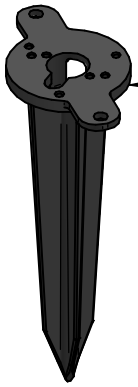

KIT77
not included



14992
not included

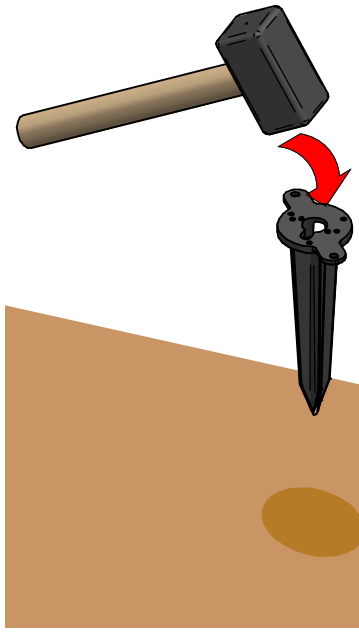

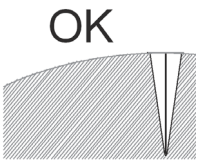

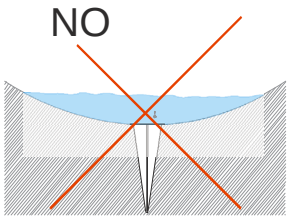

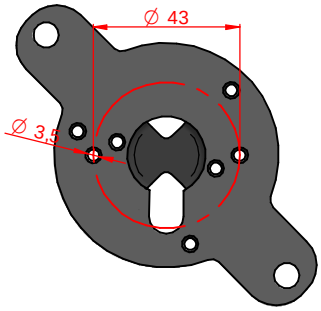

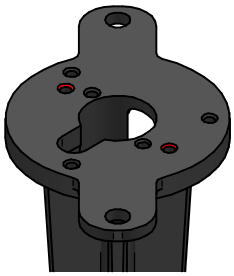

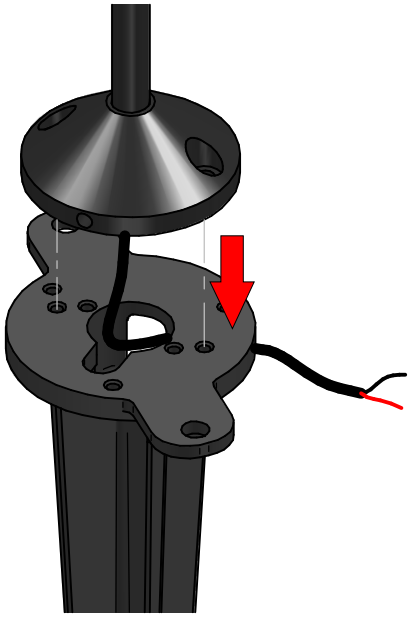

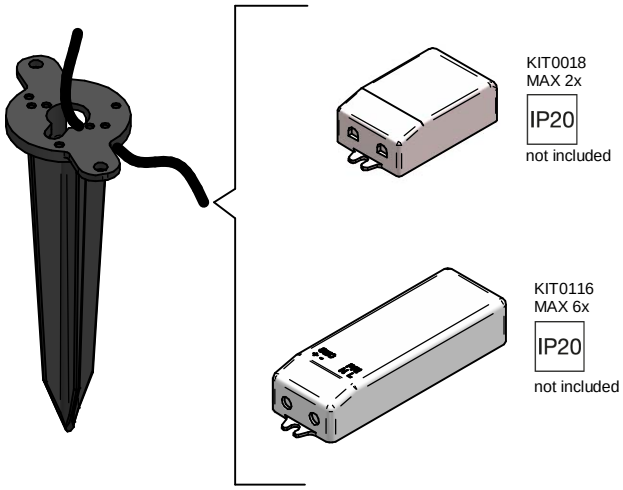

KIT0018
MAX 2x
IP20
not included

KIT0116
MAX 6x
IP20
not included

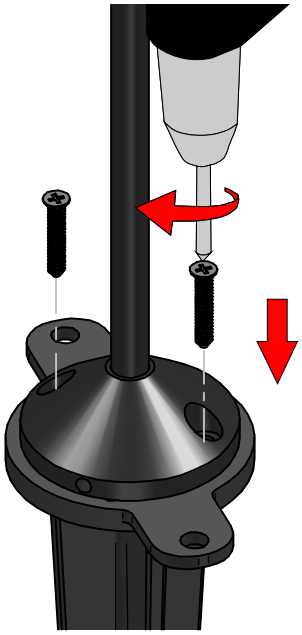

KIT0018

-Alimentatore non incluso.
-Power supply unit not included.
-Netzgerät nicht inbegriffen.
-Alimentador no incluido.
-Alimentateur non compris.

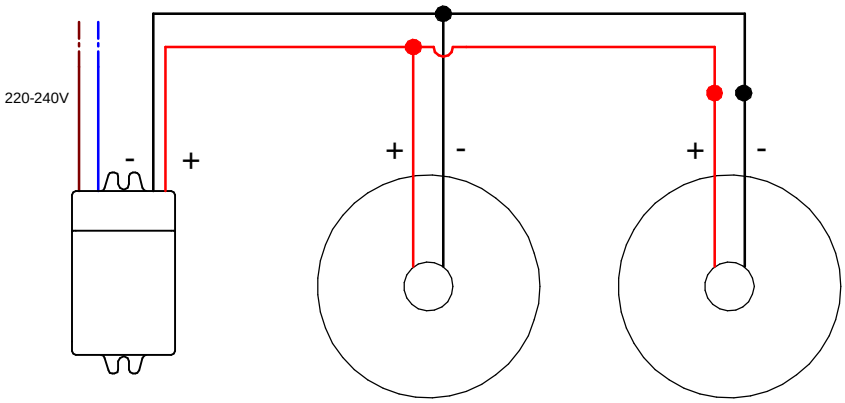

KIT0116

-Alimentatore non incluso.
-Power supply unit not included.
-Netzgerät nicht inbegriffen.
-Alimentador no incluido.
-Alimentateur non compris.

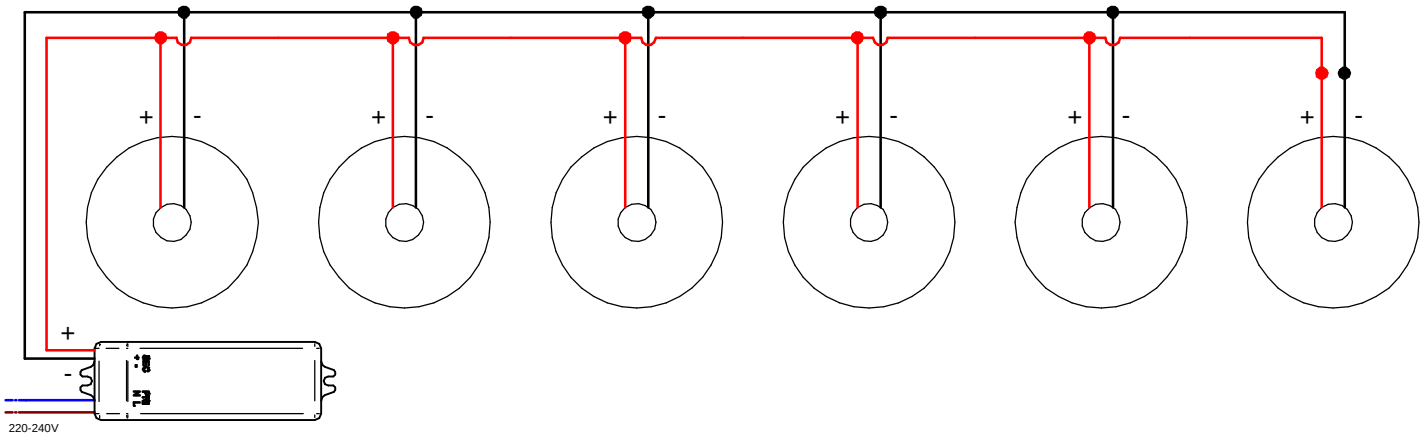

LUNGHEZZA MASSIMA CAVI

SEZIONE CAVI	1,5 mm²	2,5 mm²
LUNGHEZZA CAVI	20 m	30 m

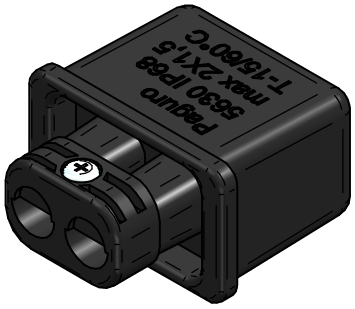

14992



