LIRA SOSPENSIONE
rev:00

linea light

Decòrative

9322

9323

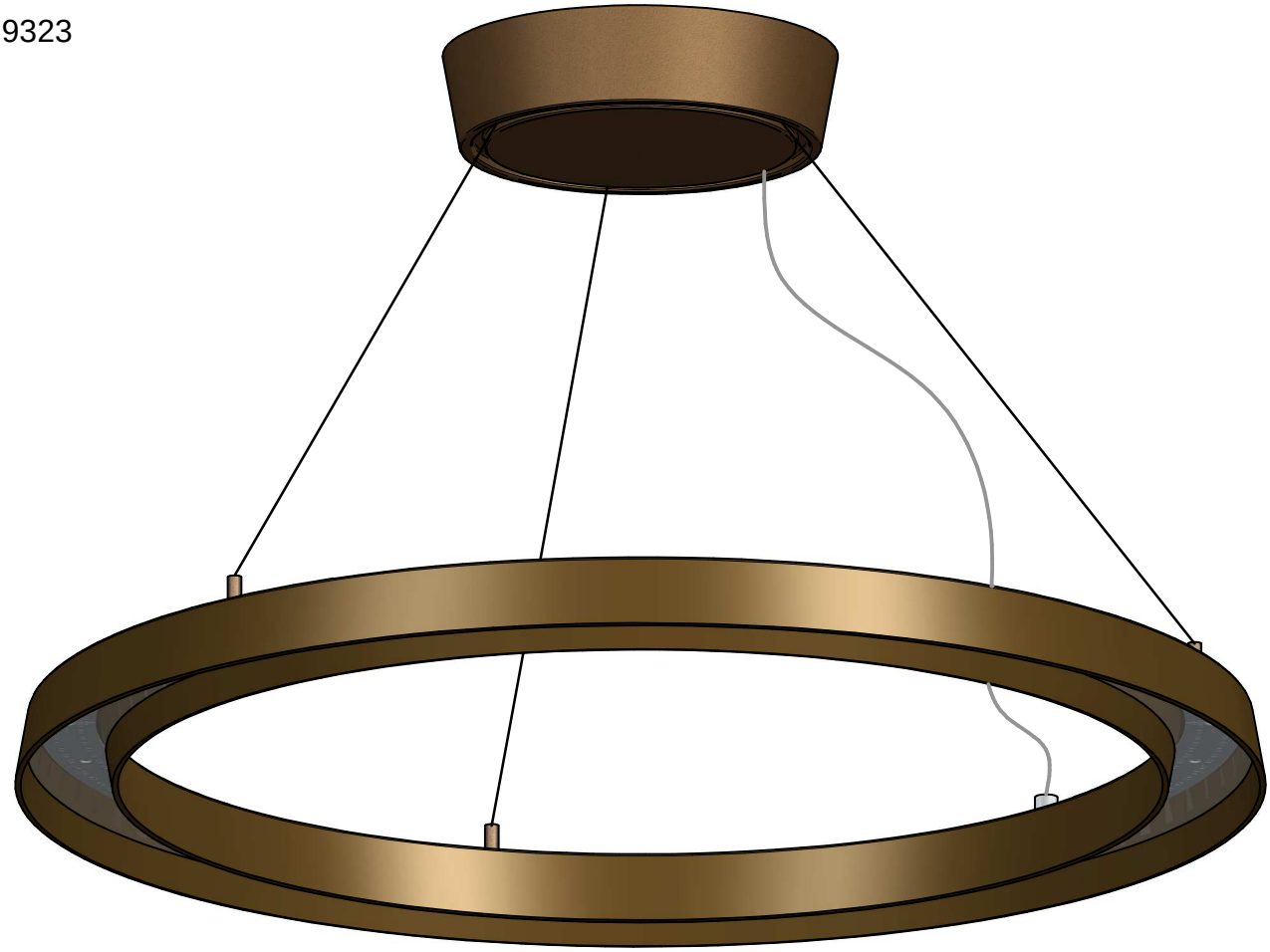

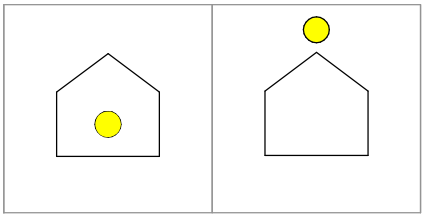

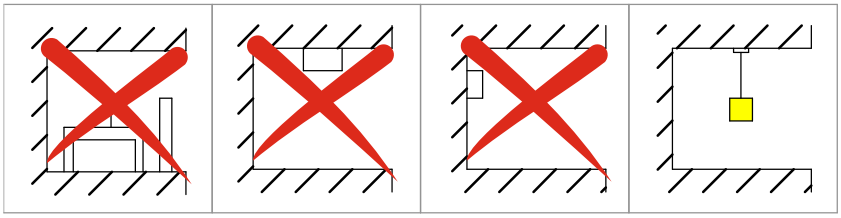

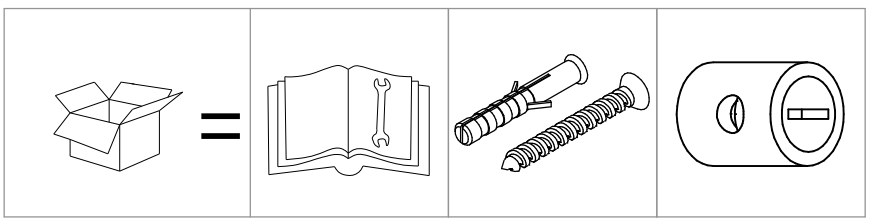

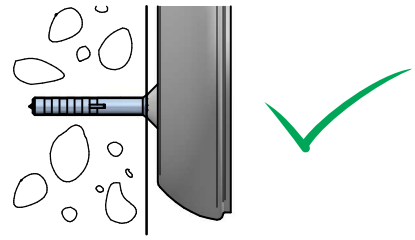

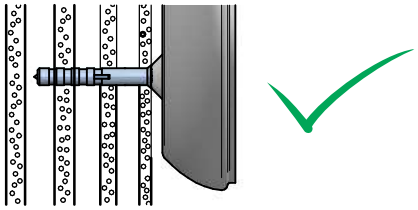

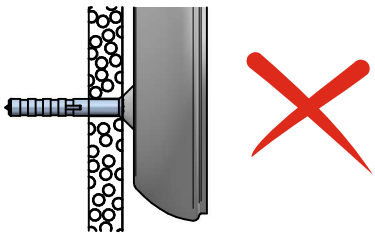

LIRA SOSPENSIONE
rev:00

1

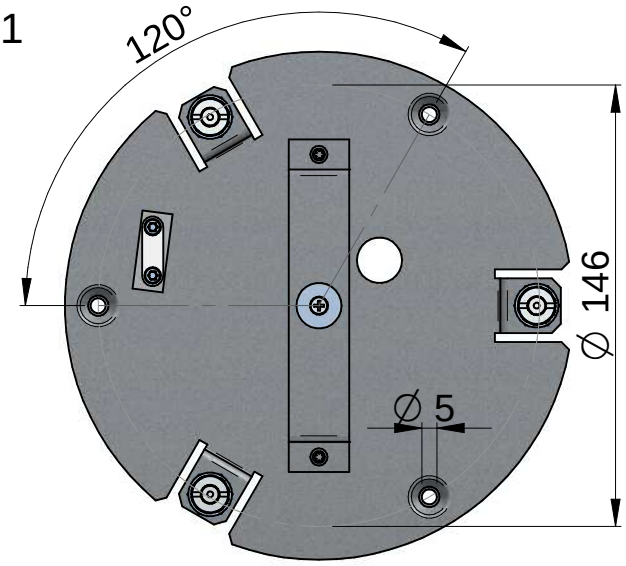

2

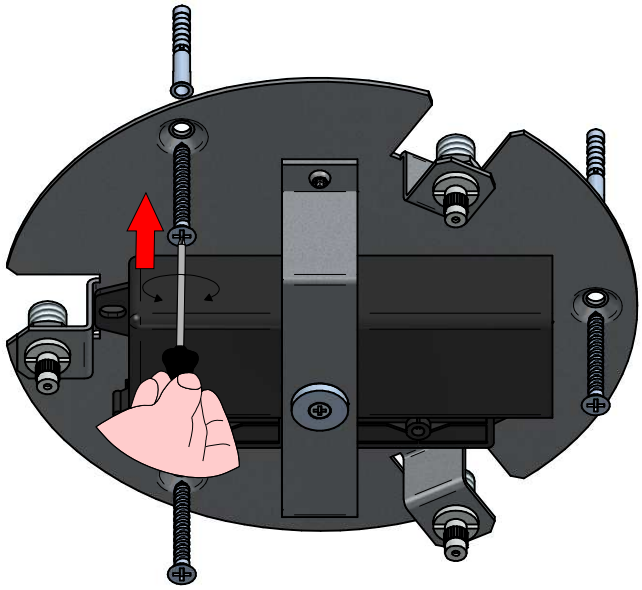

3

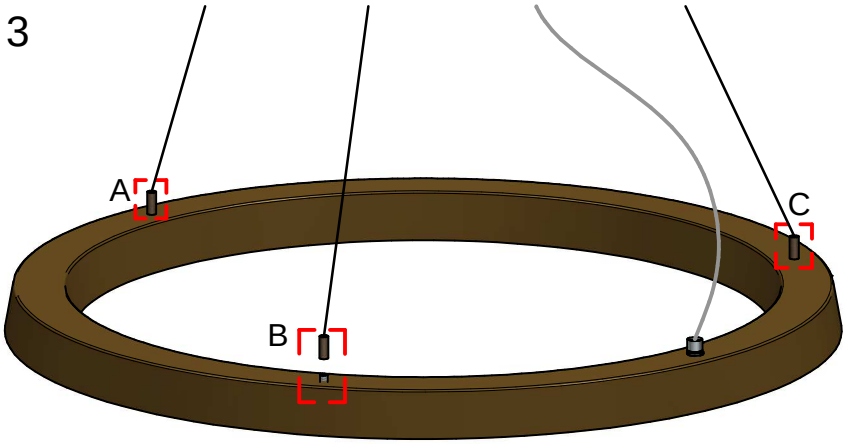

A=B=C

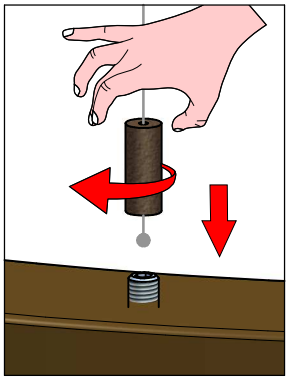

4

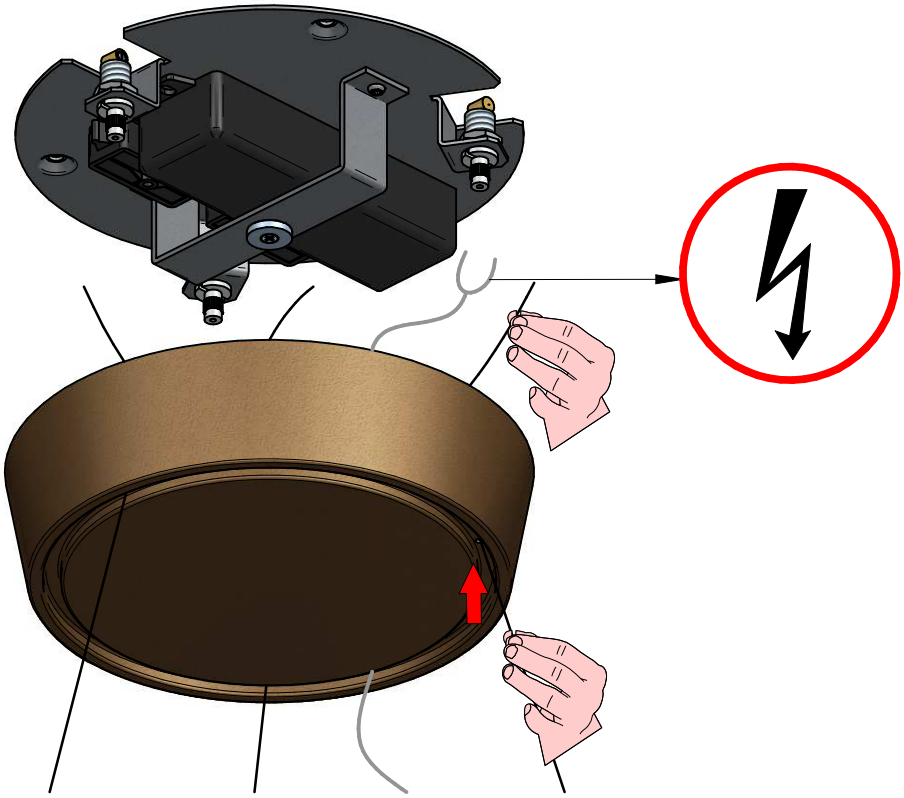

5

A=B=C

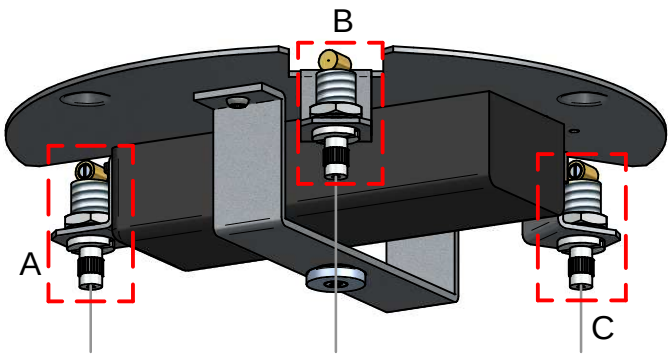

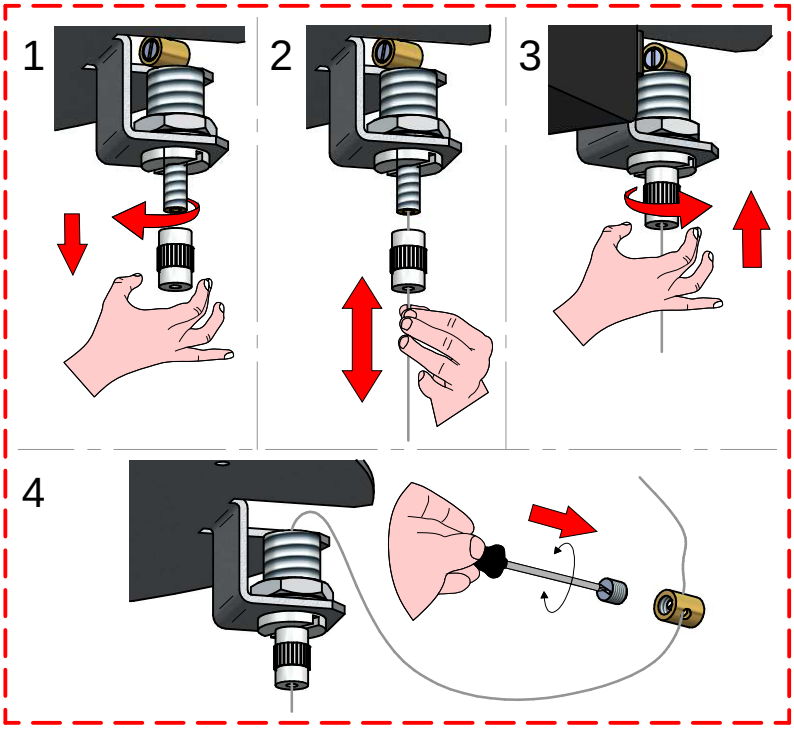

6

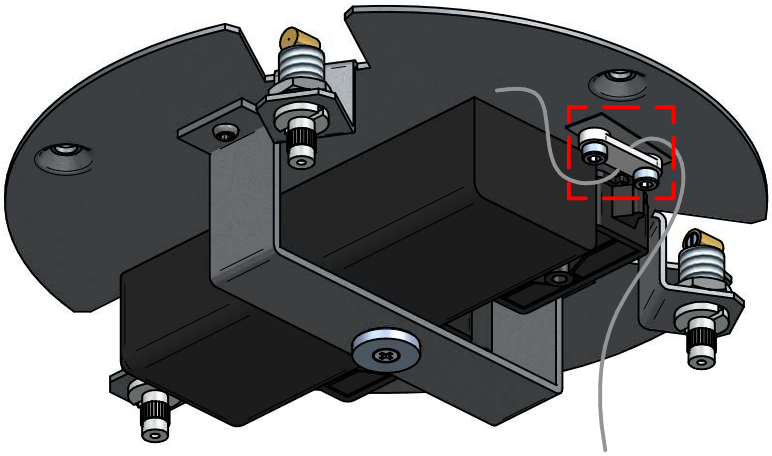

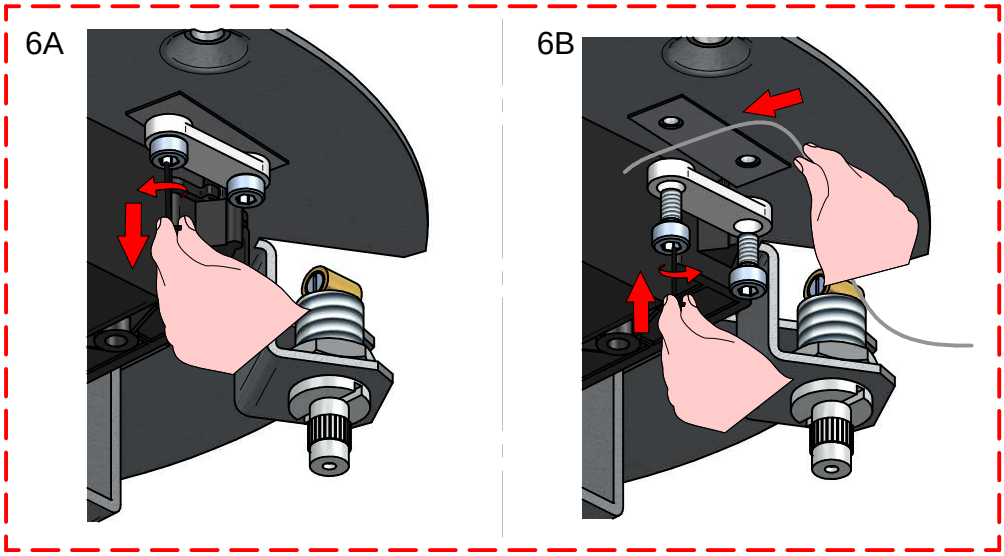

7

H05RN-F
NOT INCLUDED

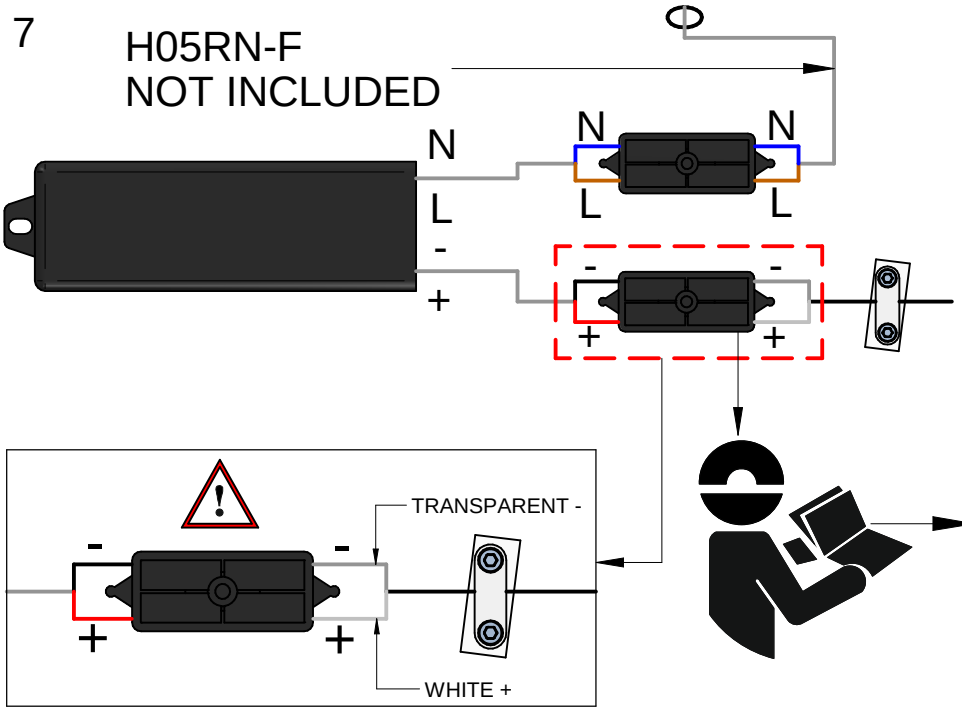

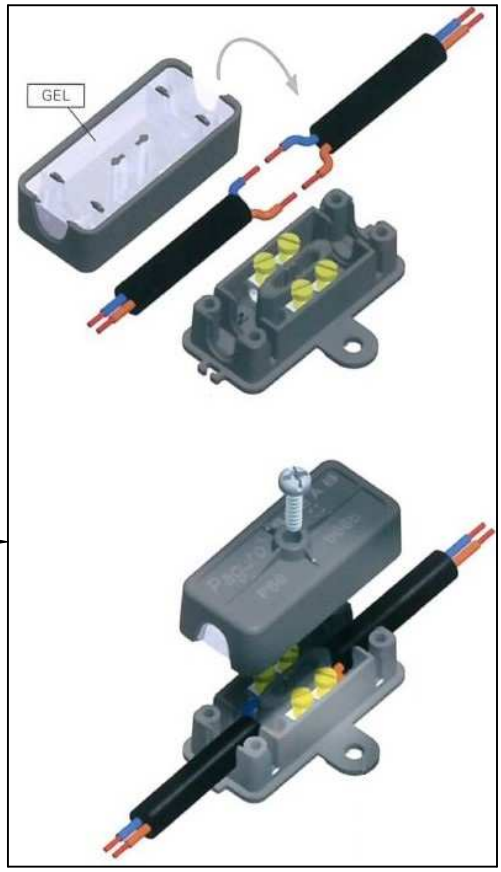

8

