LIRA PLAFONE
rev:00

9324

9325

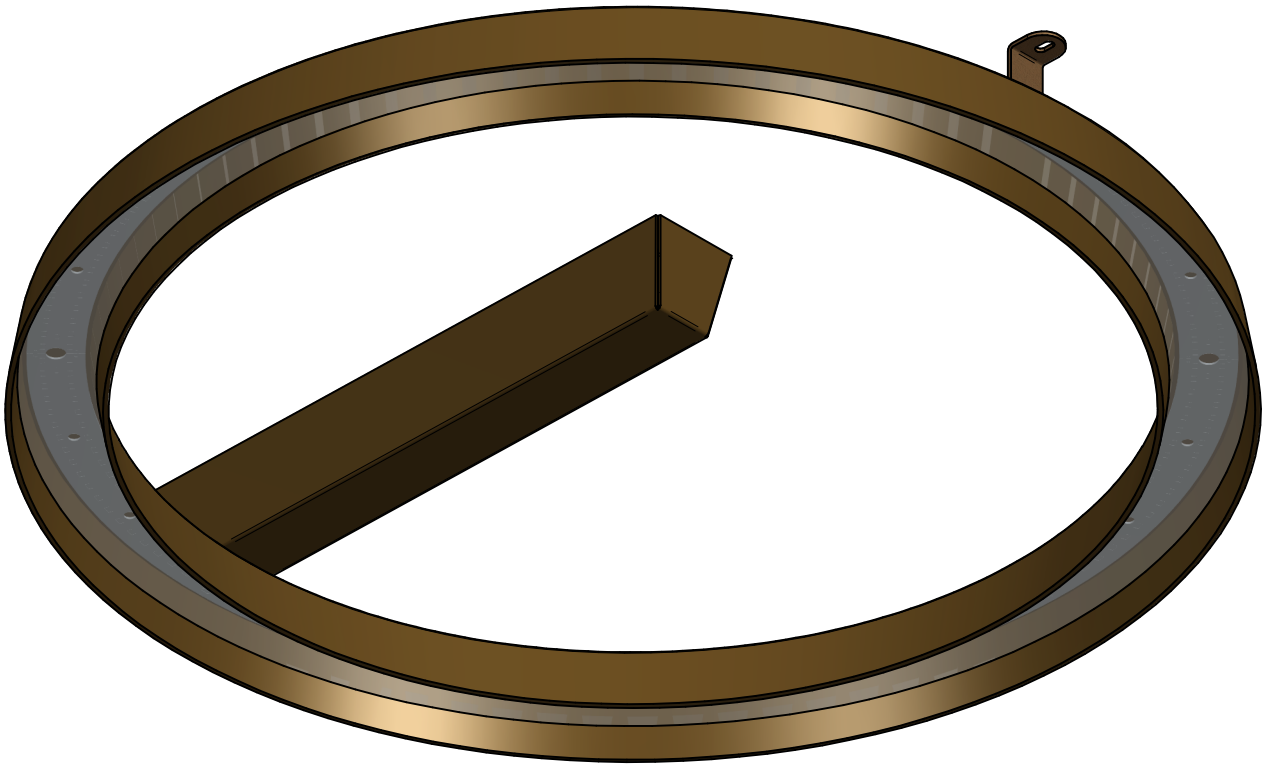

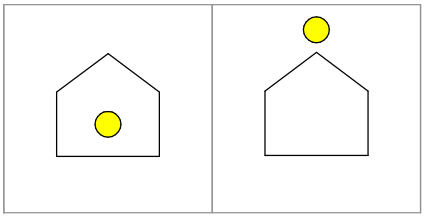

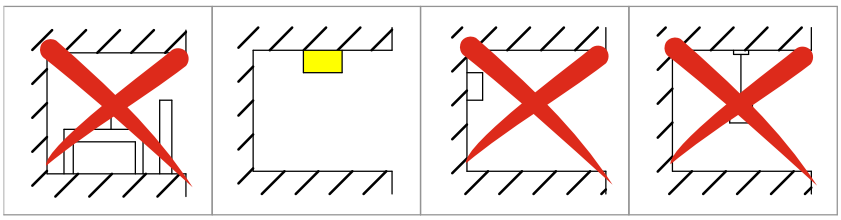

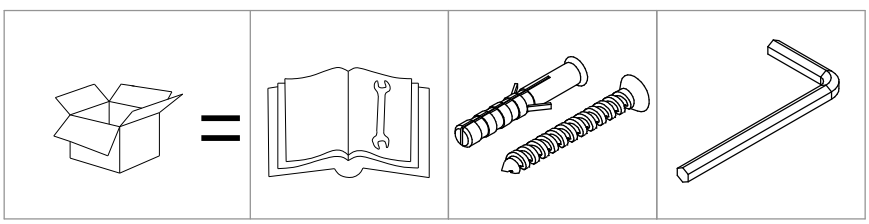

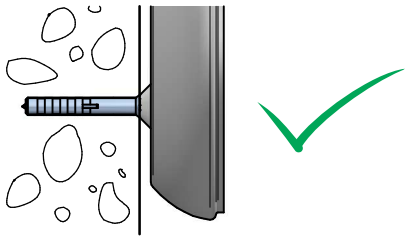

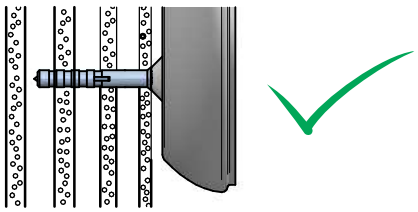

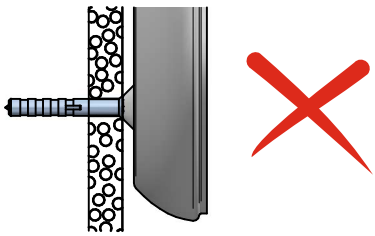

LIRA PLAFONE
rev:00

1

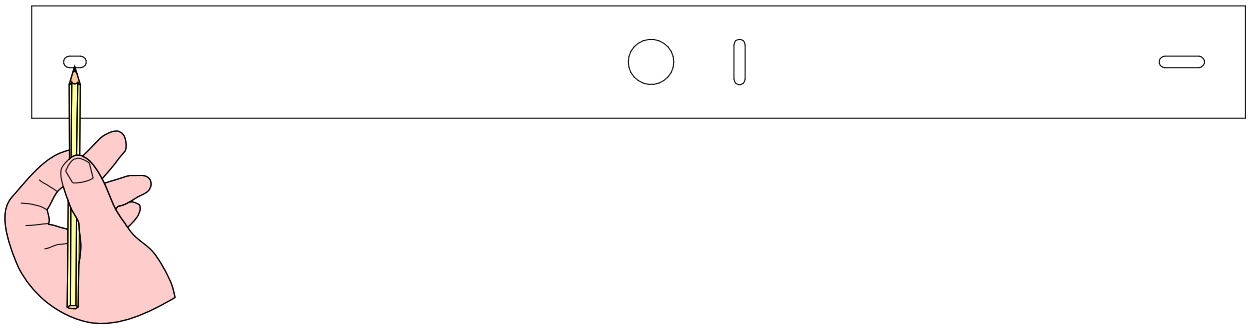

2

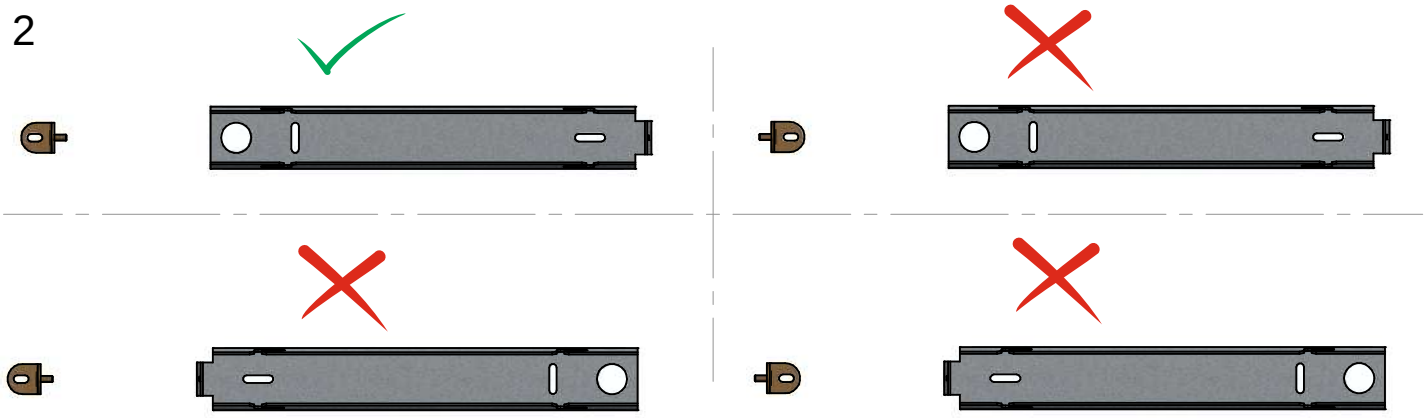

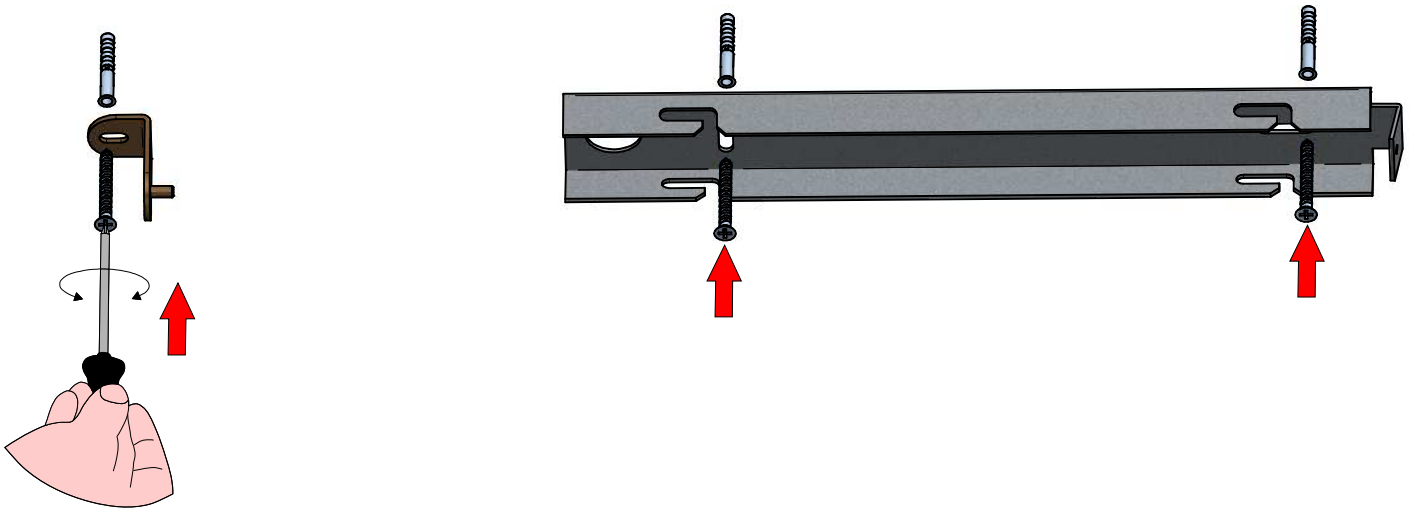

3

H05RN-F
NOT INCLUDED



4

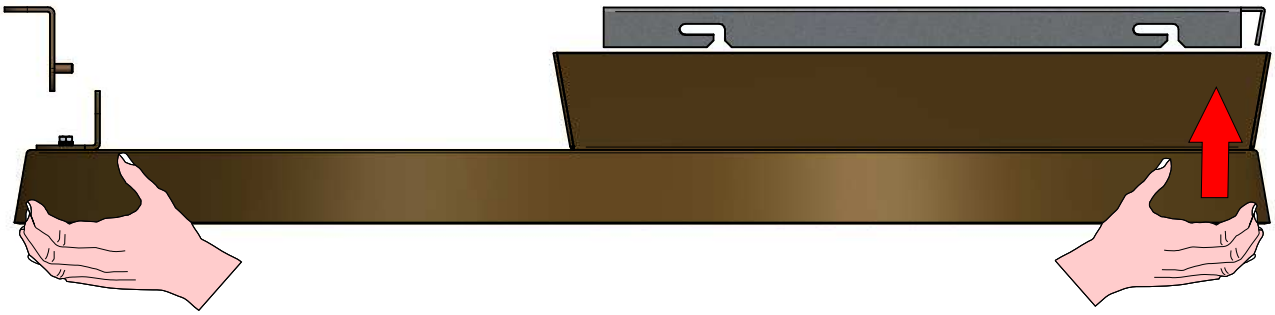

5

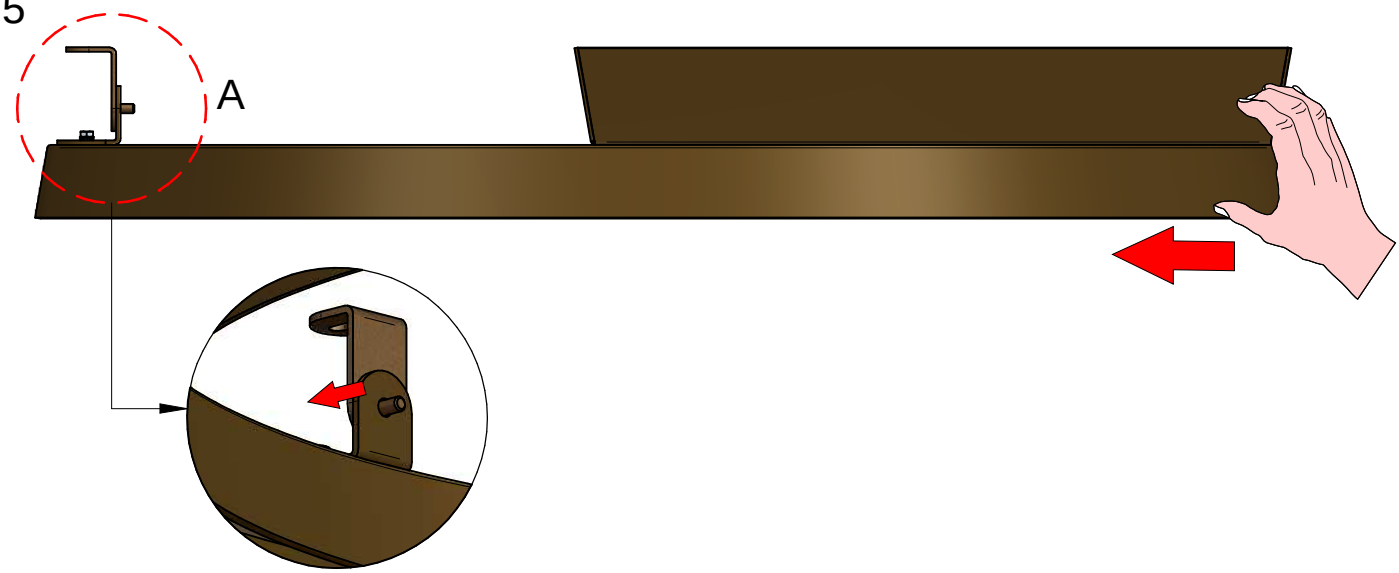

6

